Mazda RX-7

1993
Service Highlights

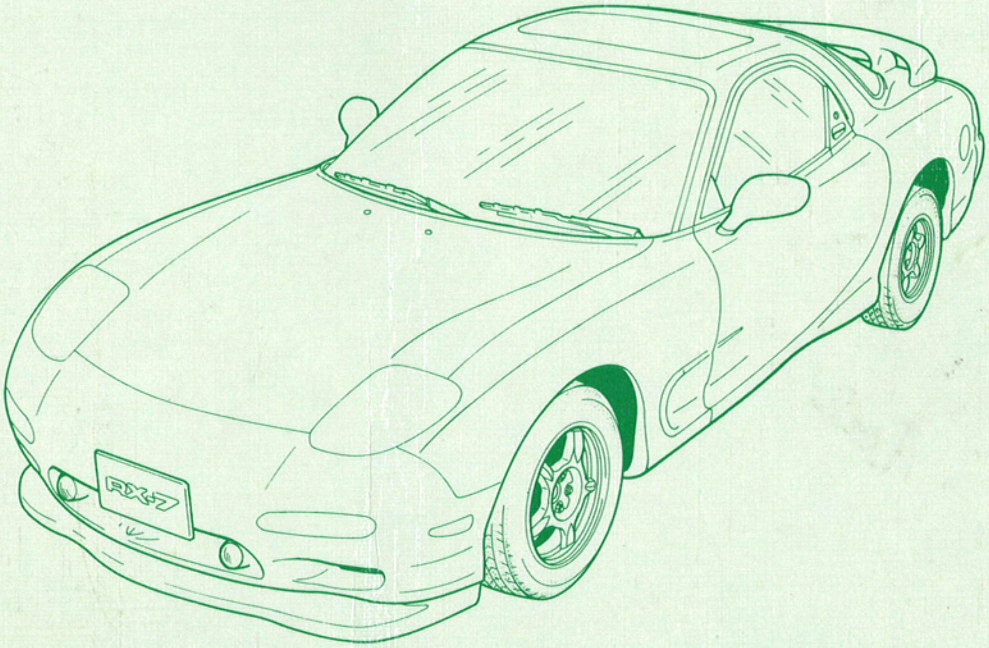

mazda

CONTENTS

GENERAL INFORMATION

29UGIX-501

ABBREVIATIONS

AAS	Air adjusting screw	HU	Hydraulic unit
ABDC	After bottom dead center	ISC	Idle speed control
ABS	Anti-lock brake system	IG	Ignition
A/C	Air conditioner	IN	Intake
ACC	Accessories	INT	Intermittent
ATDC	After top dead center	LO	Low
ATF	Automatic transmission fluid	M	Medium
AUTO A/C	Automatic air conditioner	NOx	Nitrogen oxide
BAC	Bypass air control	OD	Overdrive
BBDC	Before bottom dead center	P/S	Power steering
BTDC	Before top dead center	P/W	Power window
CD	Compact disc	RAM	Random access memory
CO	Carbon monoxide	ROM	Read only memory
CPU	Central processing unit	SOL	Solenoid
CSI	Cold start injector	SRS	Supplemental restraint system
CU	Control unit	ST	Start
DRL	Daytime running light	SOL.V.	Solenoid valve
EC-AT	Electronically controlled automatic transmission	SST	Special service tool
ECU	Engine control unit	STS	Super torque synchronizer
EGI	Electronic gasoline injection	S.V.C.U.	Solav ventilation control unit
ESPS	Engine speed sensing power steering	SW	Switch
EU	Electronic unit	TECS	Total engine control system
EX	Exhaust	TNS	Tail, number, side turn light
GND	Ground	UP	Upper
HC	Hydrocarbon	V_B	Battery voltage
HI	High	VICS	Variable inertia charging system

37UGIX-501

UNITS

N·m {kgf·m or kgf·cm, ft·lbf or in·lbf}	Torque
rpm	Revolutions per minute
A	Ampere(s)
V	Volt(s)
Ω	Ohm(s) (resistance)
kPa {kgf/cm², psi}	Pressure (usually positive)
kPa {mmHg, inHg}	Pressure (usually negative)
W	Watt(s)
µF	Electric capacity
°C	Centigrade
°F	Fahrenheit
L {US qt, Imp qt}	Volume
mm {in}	Length

37UGIX-502

ENGINE

37U0CX-501

OUTLINE

OUTLINE OF CONSTRUCTION

The 13B engine used in the latest RX-7 is designed for higher output and greater reliability.

Major changes

1. Front cover: The mounting holes have been removed because of a crank angle sensor change.
2. Side housing: The side housing is thinner for decreased weight, and the intake port has been enlarged to match the turbocharger.
3. Rotor housing: The trochoid surface is coated with Graphite to improve initial break-in.
4. Eccentric shaft: The main journal diameter is increased to withstand higher rotating speeds. The main journal oil clearance is changed from 45—80 μ to 60—80 μ.
5. Stationary gear: A set-screw type retainer is introduced to improve main bearing reliability.
6. Spacer: One of five spacers of different thicknesses is selectively used (marked A-E).

37U0CX-502

STRUCTURAL VIEW

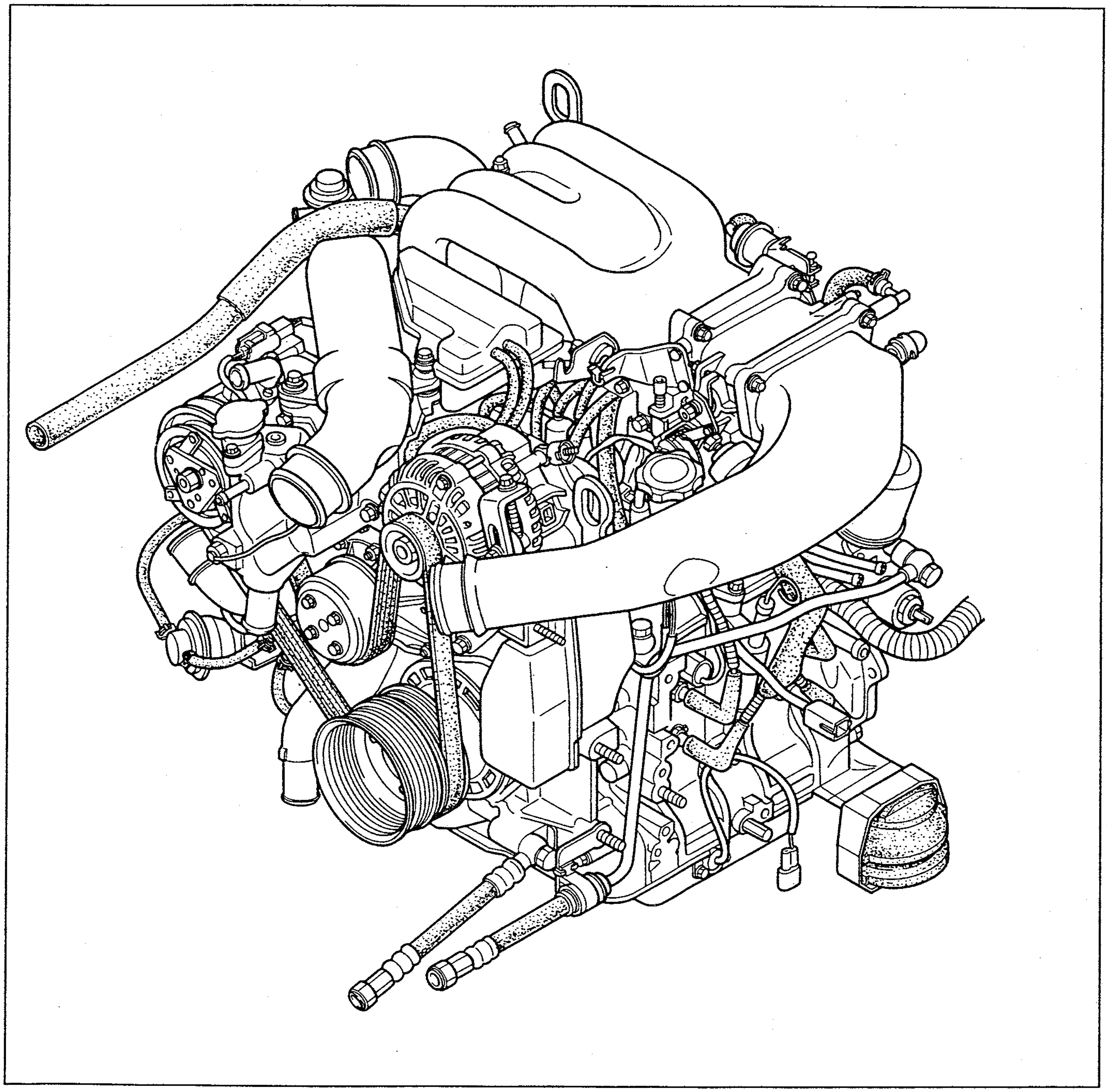

37U0CX-503

SPECIFICATIONS

Engine Item				13B Turbo
Engine type				Rotary engine
Displacement cm^3 {cu in}				654 × 2 {40.0 × 2}
Number of cylinders and arrangement				2 rotors, longitudinal
Combustion chamber type				Bathtub
Compression ratio				9.0: 1
Port timing	Intake	Open	Primary	45°BTDC
			Secondary	32°BTDC
		Close	Primary	50°ABDC
			Secondary	50°ABDC
	Exhaust	Open		75°BBDC
		Close		48°ATDC
Fuel supply system				EGI
Ignition timing*			Trailing	20°ATDC (–20° BTDC)
			Leading	5°ATDC (–5° BTDC)
Idle speed* rpm				700—750

* Test connector grounded

37U0CX-504

INTERCHANGEABILITY

The following chart shows the interchangeability of the main parts of the new 13B engine and the previous 13B engine in the 1991 Mazda RX-7.

Symbols

○........Interchangeable ×........Not interchangeable

Part name	Interchangeability	Remark
Front cover	×	Shape different
Front oil seal	×	Material different
Front cover gasket	×	Shape different
Front housing	×	Port shape different
Intermediate housing	×	Port shape different
Rear housing	×	Port shape different
Rotor housing	×	Port shape different
Sealing rubber	○	
Tension bolt	○	
Eccentric shaft	×	Journal diameter different
Lock bolt	×	Torque different
Stationary gear	×	
Main bearing	×	Inner diameter different
Rotor	×	Thickness different
Rotor bearing	×	Inner diameter different
Apex seal & spring	○	
Side seal & spring	○	
Corner seal & spring	○	
Rear oil seal	○	
Spacer	×	Thickness different
Balance weight	×	Weight different
Flywheel	×	Weight different
Counter weight	×	Weight different
Locknut	○	
Drive belt pulley	×	Shape different
Oil pump	×	Capacity increased
Oil strainer	×	Shape different
Oil strainer gasket	○	
Metering oil pump	×	Capacity increased
O-ring	○	
Metering oil tube	×	Shape different
Connect bolt	○	
Oil filter	○	
Oil pan	×	Shape different
Oil pan gasket	×	Shape different
Pressure regulator	×	Relief pressure different
Oil pressure switch	×	Improvement of accuracy
Oil level sensor	○	
Thermo perette	○	
Oil jet	○	
Oil cooler	×	Shape different
Water pump	×	Housing material different
Thermostat	×	Shape different
Radiator	×	Shape different
Cooling fan	×	Electric control

37U0CX-505

LUBRICATION SYSTEM

37U0DX-501

OUTLINE

OUTLINE OF CONSTRUCTION

The lubrication system of the engine in the latest RX-7 is basically the same as that of the previous model.

The redesined components are as follows.

1. Increased efficiency of the oil pump improves engine lubrication.
2. The oil strainer shape is changed.
3. An oil baffle is placed in the oil pan to prevent the oil strainer from sucking air.
4. The metering oil pump discharge is increased to improve lubrication of the apex seal at high engine speeds.

37U0DX-502

LUBRICATION CIRCUIT

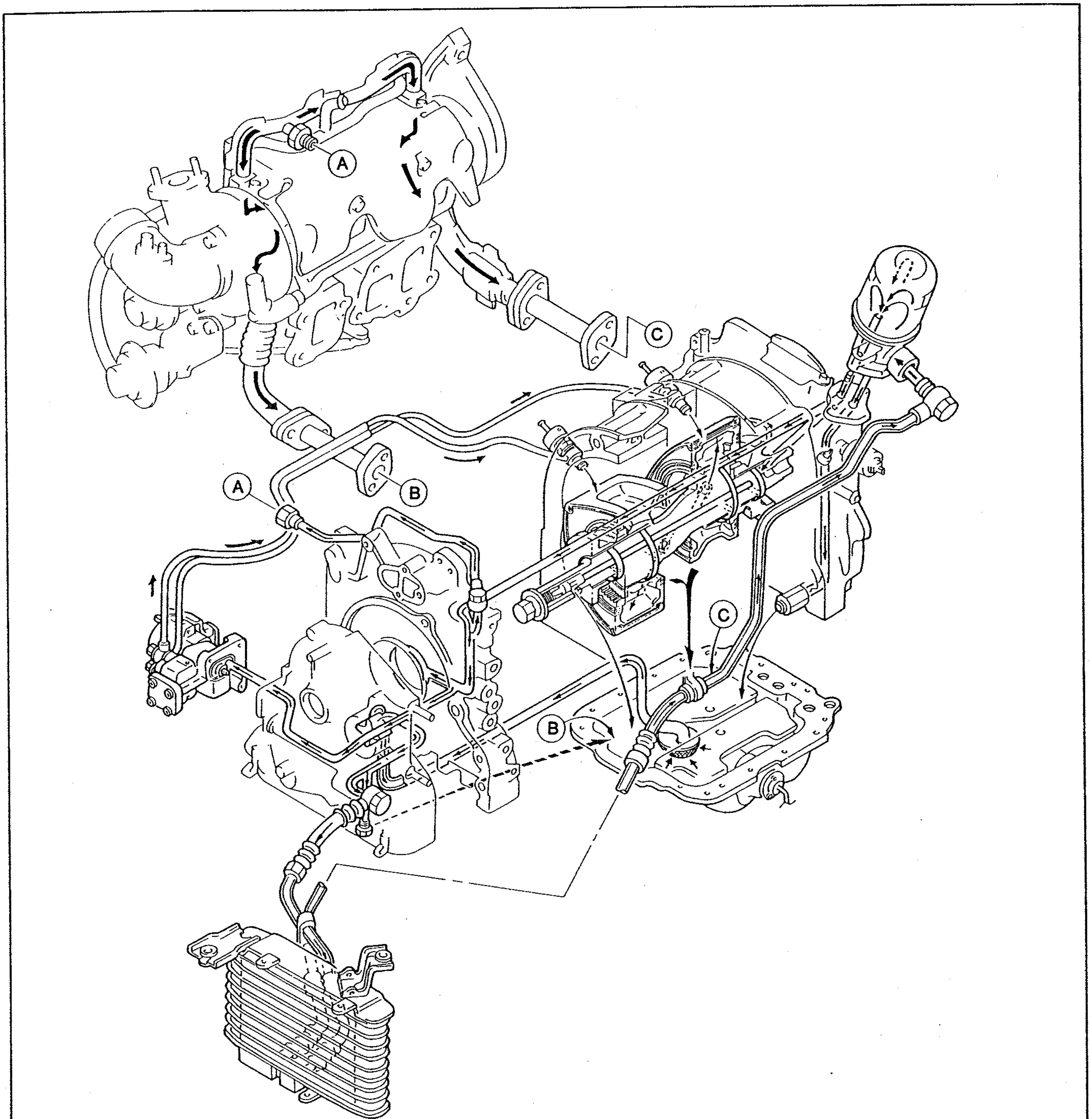

37U0DX-503

SPECIFACTIONS

Engine Item			13B Turbo
Lubrication system			Forced-fed
Oil pump	Type		Trochoid
	Regulated pressure kPa {kgf/cm^2, psi}		490 {5.0, 71}
Oil filter	Type		Full-flow, paper element
	Relief pressure differential kPa {kgf/cm^2, psi}		98 {1.0, 14}
Oil capacity L {US qt, Imp qt}		Total	5.3 {5.6, 5.7}
		Oil pan	3.9 {4.1, 3.4}
		Oil filter	0.20 {0.21, 0.18}
		Oil cooler	0.15 {0.16, 0.13}
Engine oil			API Service SG Energy Conserving II (ECII)

37U0DX-504

COOLING SYSTEM

37U0EX-501

OUTLINE

OUTLINE OF CONSTRUCTION

The cooling system of the New Mazda RX-7 is a typical forced circulation type. Some improvements over that of the previous RX-7 have been made to the system for improved operation and engine reliability.

Improvements

1. The water pump housing is changed to aluminum.
2. The radiator heat dissipation capacity is increased.
3. The radiator cap opening pressure is increased.
4. The cooling fan drive is changed to an electrical drive system.

37U0EX-502

COOLANT FLOW CHART

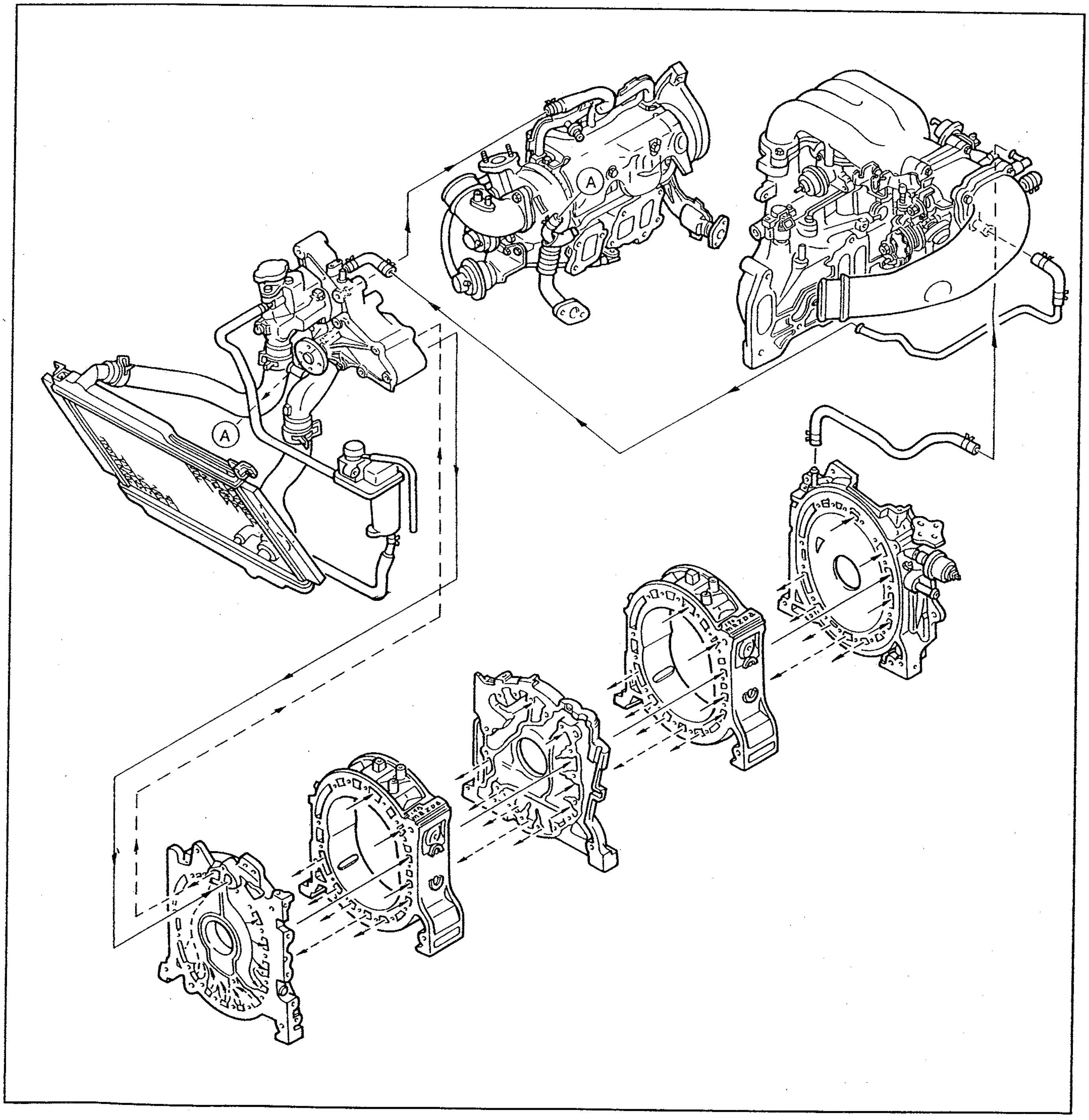

37U0EX-503

SPECIFICATIONS

Item			Engine	13B Turbo
Cooling system				Water-cooled, force circulation
Coolant capacity			L {US qt, Imp qt}	8.7 {9.2, 7.7}
Water pump	Type			Centrifugal
	Water seal			Unified mechanical seal
Thermostat	Type			Wax, bottom bypass
	Opening temperature		°C {°F}	80.5—83.5 {177—182}
	Full-open temperature		°C {°F}	95 {203}
	Full-open lift		mm {in}	8—10 {0.31—0.39}
Radiator	Type			Corrugated fin
	Cap valve opening pressure		kPa {kgf/cm^2, psi}	115—145 {1.15—1.45, 16.4—20.6}
	Heat dissipation capacity		kJ {kcal}/h	167,440 {40,000}
	Core size mm {in}	Width		625 {24.6}
		Height		315 {12.4}
		Depth		25.0 {0.98}
	Fin pitch		mm {in}	1.3 {0.05}
Cooling fan	Type			Electrical
	Blade	Outer diameter	mm {in}	300 {11.8}
		Number		5
	Motor	Fan speed	rpm	HIGH: 2,350, MID: 1,950, LOW: 1,800
		Current	A	HIGH: 13.6, MID: 9.5, LOW: 8.8

37U0EX-504

FUEL AND EMISSION CONTROL SYSTEMS

37U0FX-501

OUTLINE

FEATURES

The main features of the fuel and emission control system of the Mazda RX-7 are as follows:

- **Excellent drivability**
  - D-jetronic fuel injection system
  - Sequential twin turbocharger with intercooler
  - Double throttle control system
  - Electronic spark advance (ESA) system with crank angle sensors (NE, G signal)
  - Knock control system
  - Torque reduction control system
  - Air pump (with electromagnetic clutch) control system
- **Low level exhaust emission**
  - Duty-controlled purge system
  - EGR (exhaust gas recirculation) system
  - Two catalytic converters (metal type and monolythic type)
  - Feedback system (fuel system)
  - Lean best idle control system (fuel system)
- **Low fuel consumption**
  - Mixing plate and air bleed socket (fuel system)
  - Lean best idle control system (fuel system)
  - Electric cooling fan control system
- **Compact, simplified**
  - Crank angle sensor
  - Side-feed type injector (primary and secondary)
  - Idle speed control system with anti-afterburn function
- **Serviceability**
  - Diagnosis connector
  - Self-diagnosis system
  - Throttle idle position automatic adjusting system

37U0FX-502

SYSTEM DIAGRAM

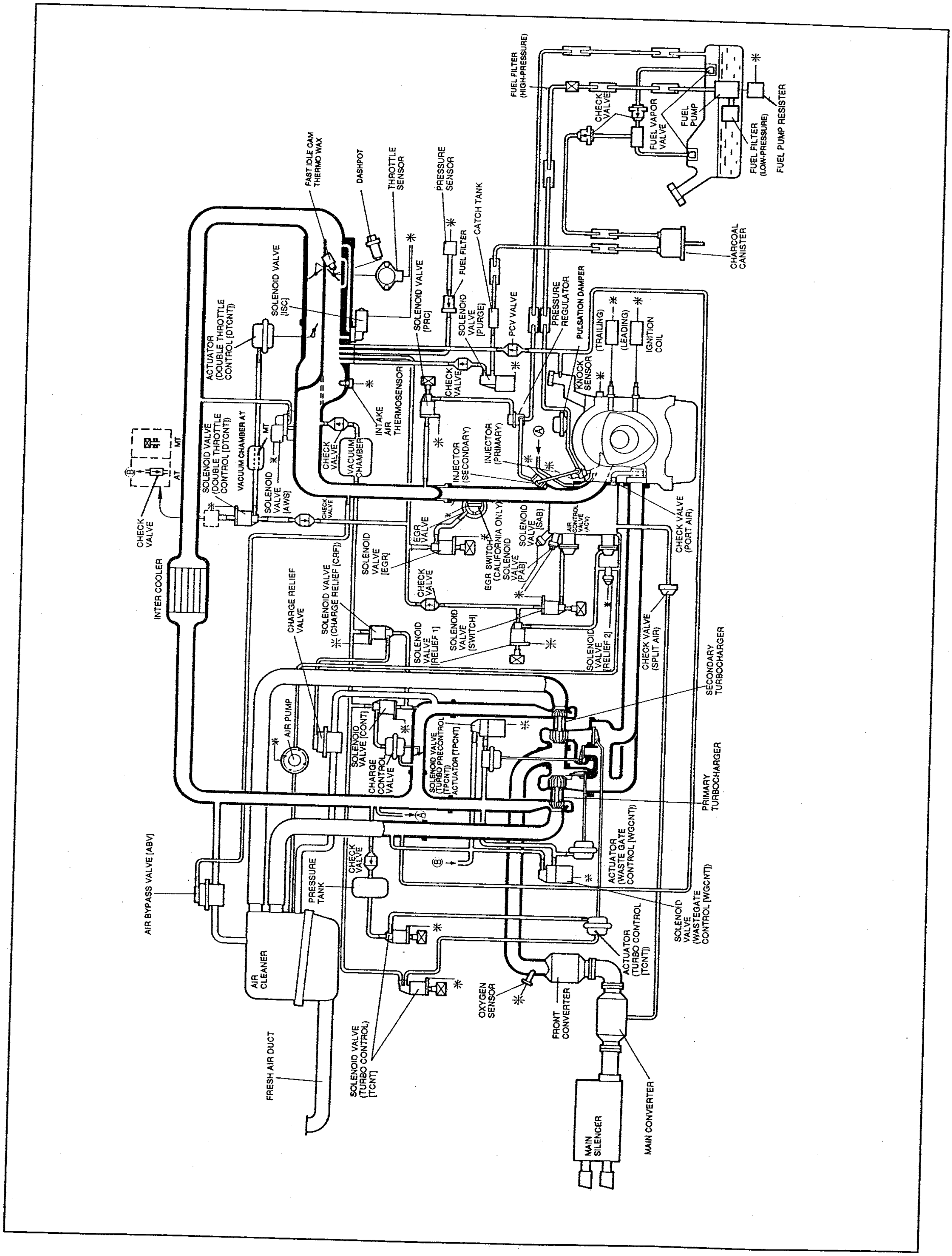

37U0FX-503

EMISSION COMPONENT LOCATIONS
Input Devices

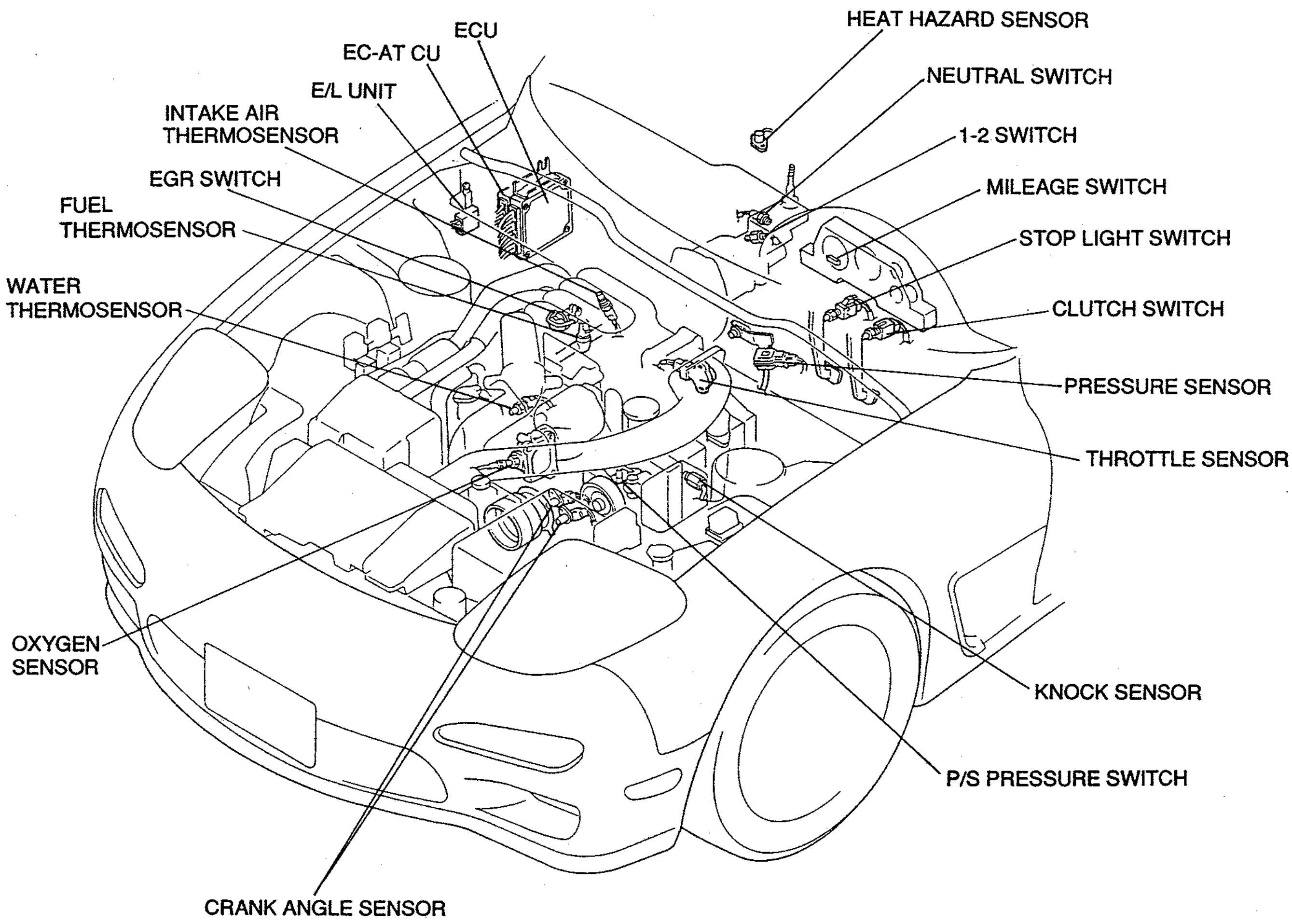

37U0FX-504

Output Devices

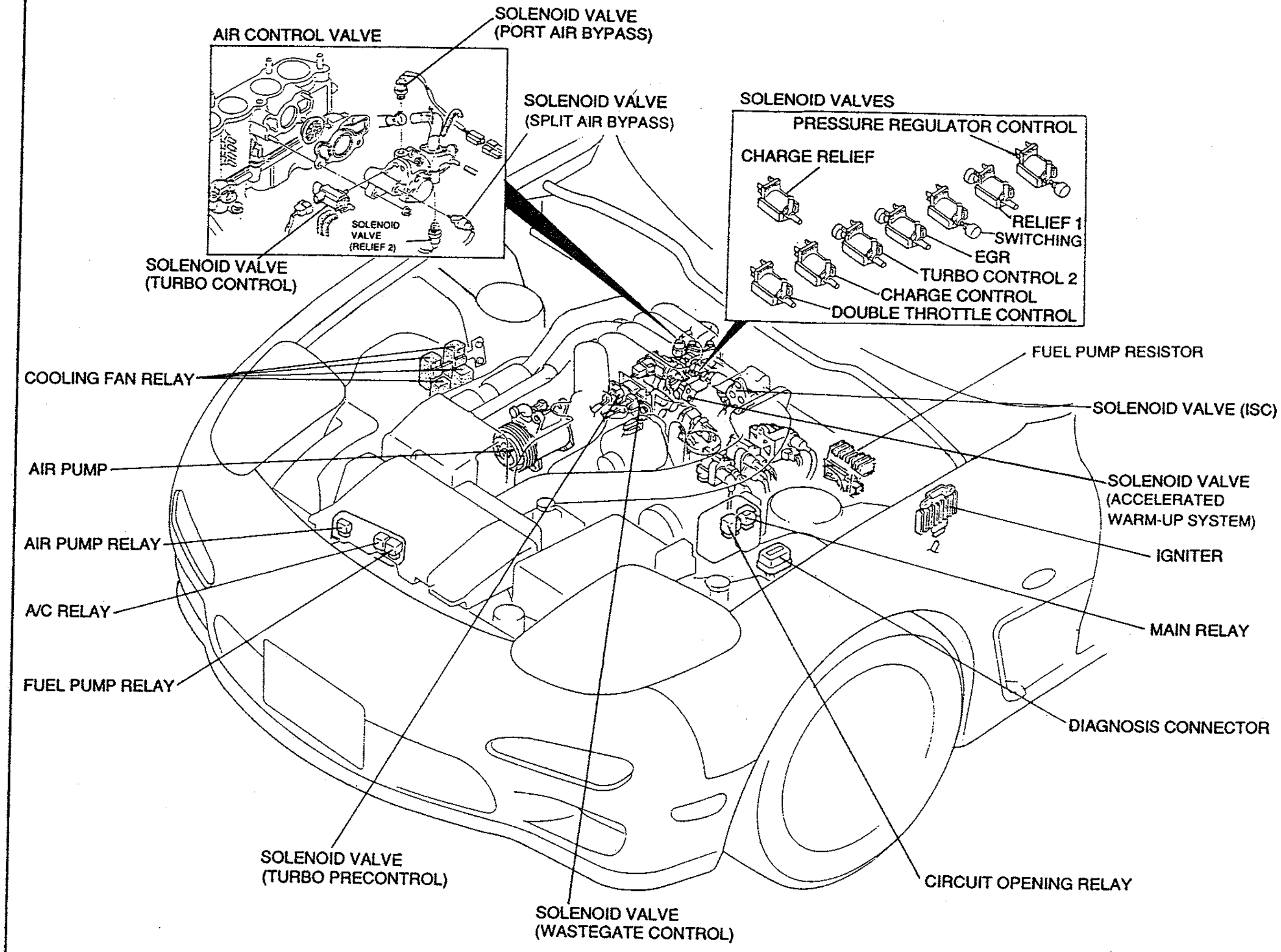

37U0FX-505

FUEL SYSTEM AND EVAPORATIVE EMISSION CONTROL SYSTEM

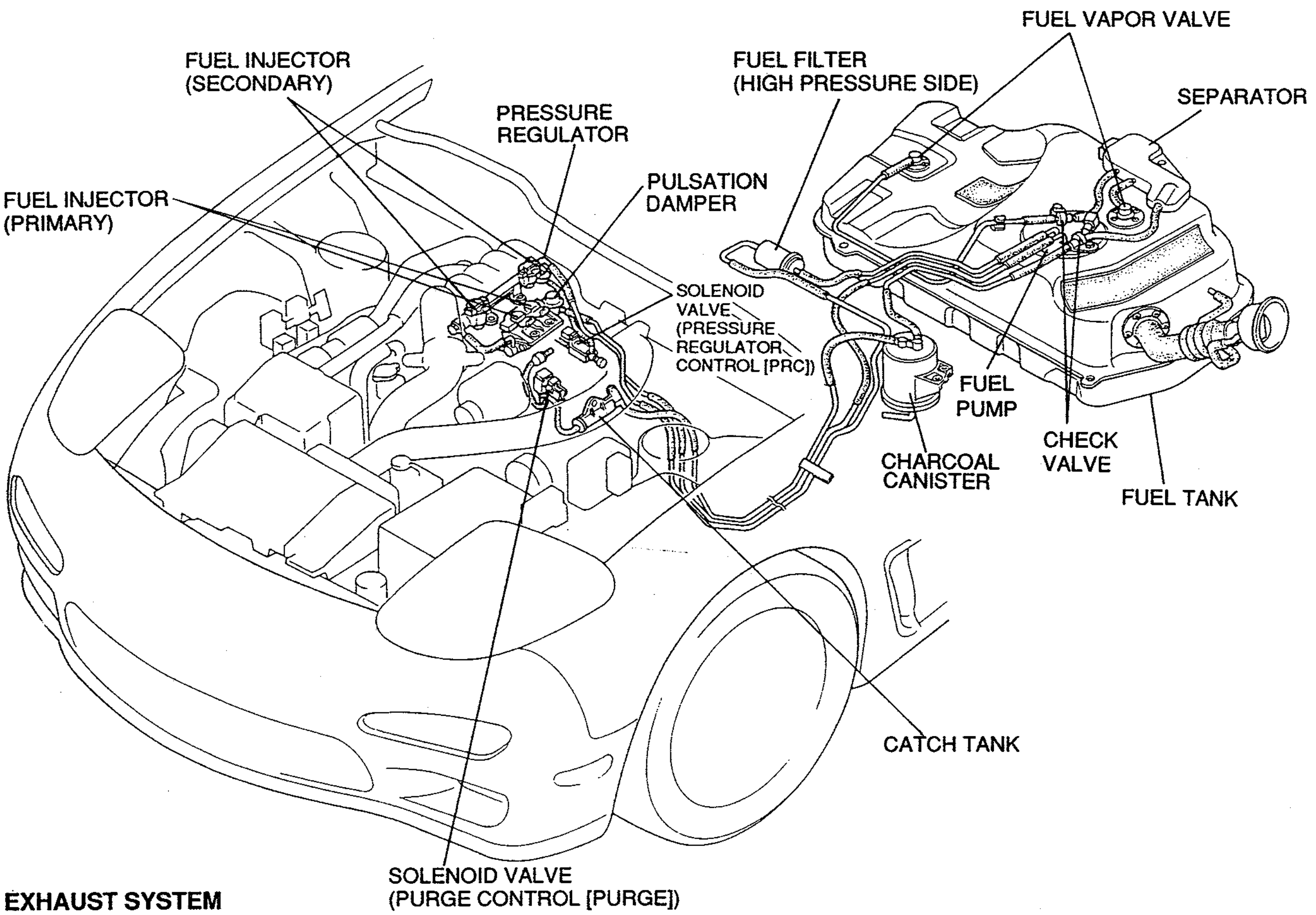

EXHAUST SYSTEM

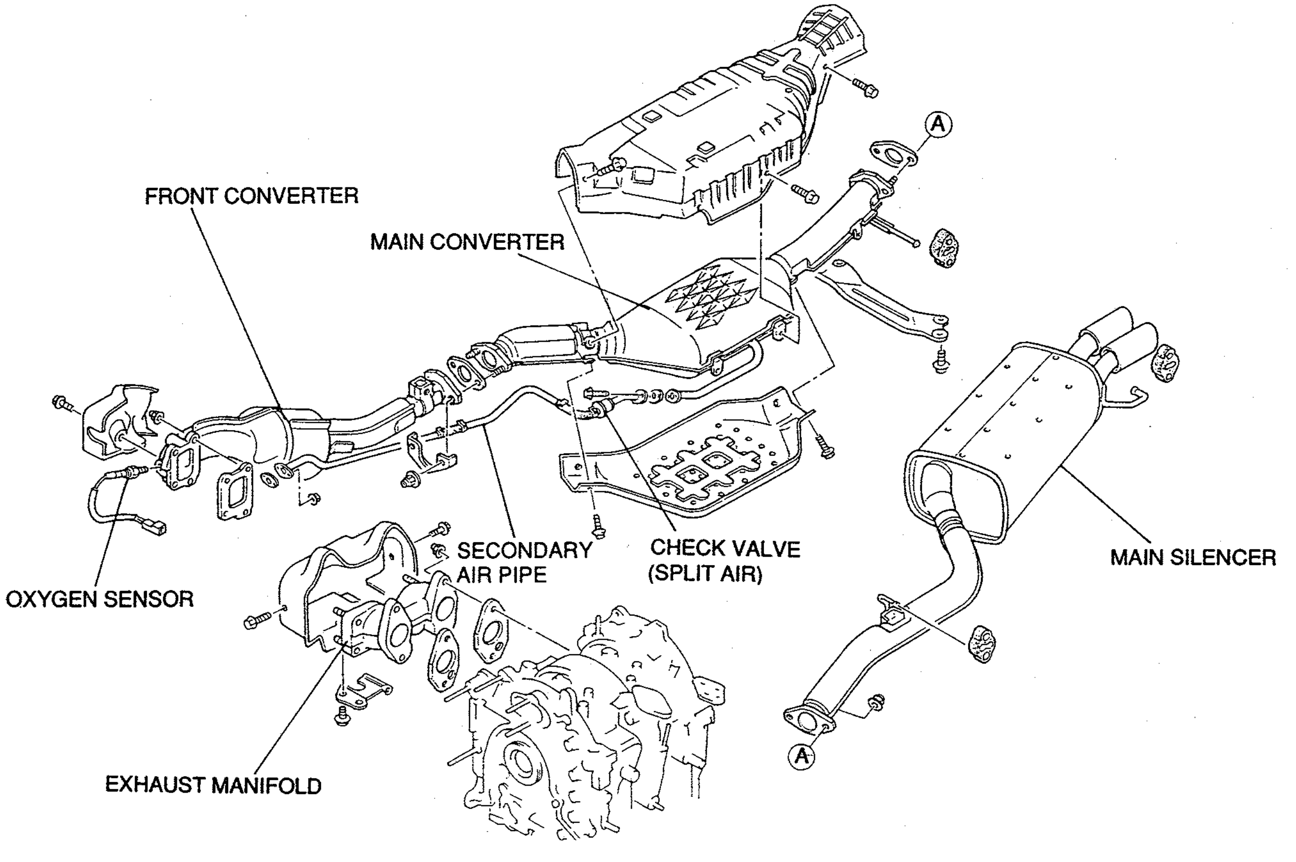

37U0FX-506

VACUUM HOSE ROUTING DIAGRAM

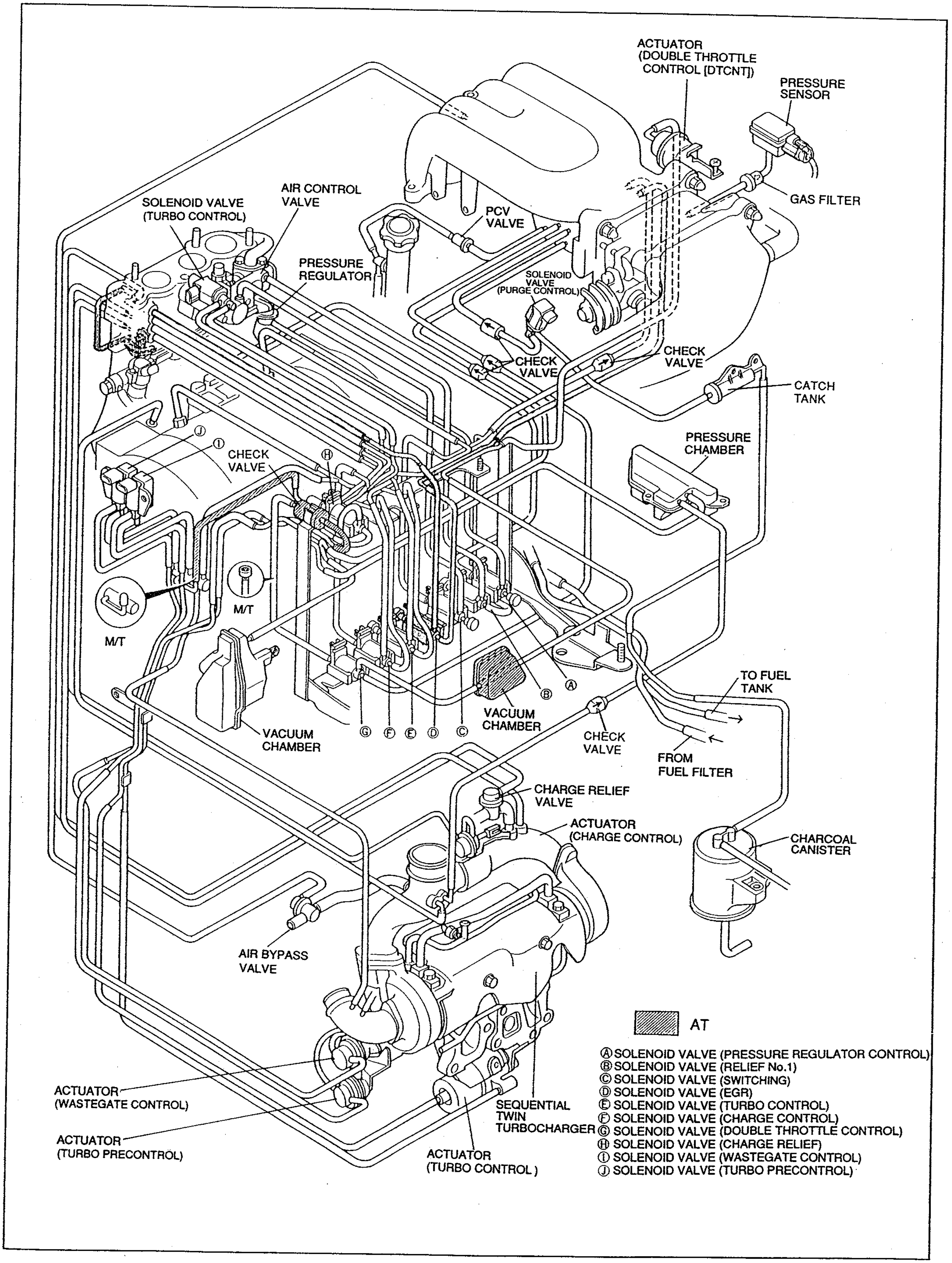

37U0FX-507

WIRING DIAGRAM

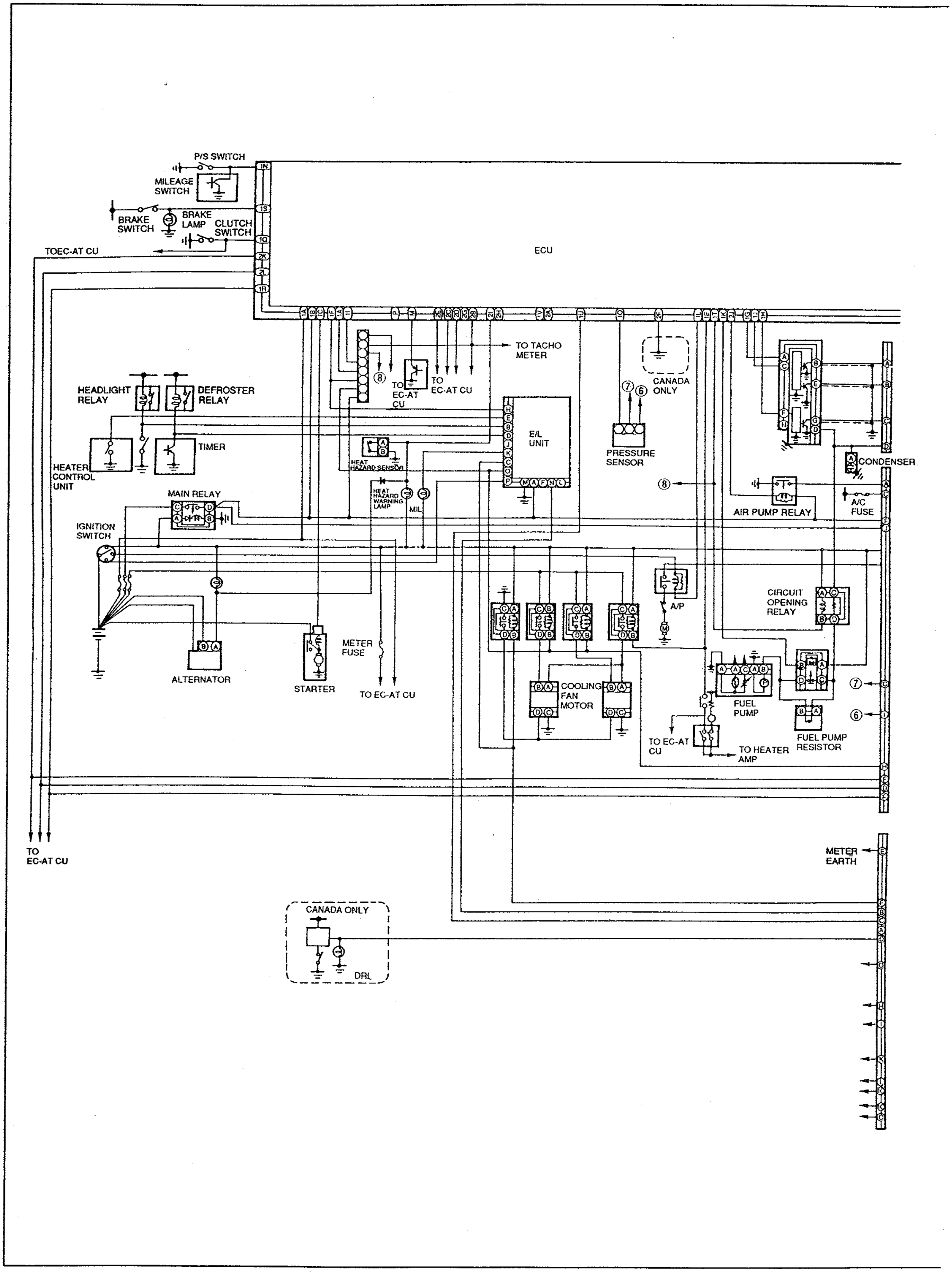

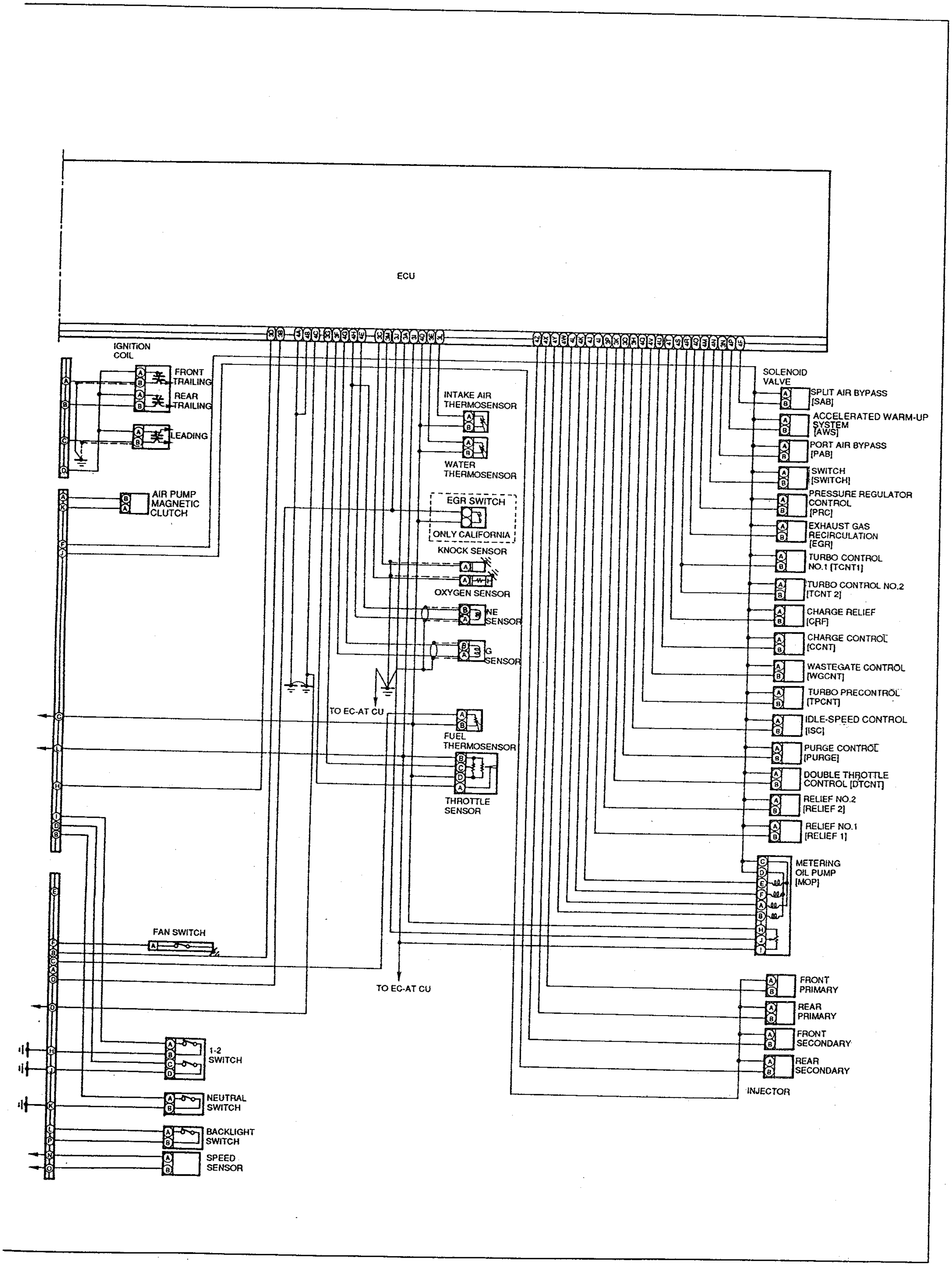
ECU
3D
3B
4A
4B
4C
3G
3F
4G
4H
4E
3C
3M
3J
3A
3I
4D
3E
3L
4Z
4X
4Y
4W
4L
4K
4J
4I
3P
3K
3O
3H
4Q
4V
4U
4T
4S
4R
4O
4M
4N
3N
4P
4F
IGNITION COIL
FRONT TRAILING
REAR TRAILING
LEADING
AIR PUMP MAGNETIC CLUTCH
INTAKE AIR THERMOSENSOR
WATER THERMOSENSOR
EGR SWITCH
ONLY CALIFORNIA
KNOCK SENSOR
OXYGEN SENSOR
NE SENSOR
G SENSOR
TO EC-AT CU
FUEL THERMOSENSOR
THROTTLE SENSOR
FAN SWITCH
TO EC-AT CU
1-2 SWITCH
NEUTRAL SWITCH
BACKLIGHT SWITCH
SPEED SENSOR
SOLENOID VALVE
SPLIT AIR BYPASS [SAB]
ACCELERATED WARM-UP SYSTEM [AWS]
PORT AIR BYPASS [PAB]
SWITCH [SWITCH]
PRESSURE REGULATOR CONTROL [PRC]
EXHAUST GAS RECIRCULATION [EGR]
TURBO CONTROL NO.1 [TCNT1]
TURBO CONTROL NO.2 [TCNT 2]
CHARGE RELIEF [CRF]
CHARGE CONTROL [CCNT]
WASTEGATE CONTROL [WGCNT]
TURBO PRECONTROL [TPCNT]
IDLE-SPEED CONTROL [ISC]
PURGE CONTROL [PURGE]
DOUBLE THROTTLE CONTROL [DTCNT]
RELIEF NO.2 [RELIEF 2]
RELIEF NO.1 [RELIEF 1]
METERING OIL PUMP [MOP]
FRONT PRIMARY
REAR PRIMARY
FRONT SECONDARY
REAR SECONDARY
INJECTOR

37U0FX-508

SPECIFICATIONS

Item			Specification
Idle speed*		rpm	700—750
Ignition timing*	Leading	ATDC°	5
	Trailing	ATDC°	20
Air cleaner			
Element type			Oil permeated
Throttle body			
Type			Horizontal draft {2-stage, 3-barrel}
Throttle diameter	Primary	mm {in}	45 {1.772}
	Secondary	mm {in}	50 {1.969} × 2
Dashpot touch angle		°	8
Water thermovalve operation (full open) temperature		°C {°F}	55—65 {131—149} or more
Intercooler			
Type			Air cooled
Core size {w × h × t}		mm {in}	294 × 114 × 65 {11.575 × 4.4882 × 2.5591}
Turbocharger			
System type			Sequential twin turbocharged
Cooling method			Water + engine oil
Boost control actuator			Turbo precontrol + wastegate control
Boost control method			Solenoid valve (duty-controlled) × 2
Fuel tank			
Capacity		liters {US gal, Imp gal}	76 {20.1, 16.7}
Fuel filler			
Type	Low-pressure		Nylon element
	High-pressure		Paper element
Pressure regulator			
Type			Diaphragm
Regulated pressure		kPa {kgf/cm^2, psi}	250—260 {2.5—2.6, 35.6—37.0)
Fuel pump			
Type			Impeller (in tank)
Output pressure		kPa {kgf/cm^2, psi}	490—740 {5.0—7.5, 71.1—106.7}
Injector			
Type			Side-feeding
Injection volume	Primary	cm^3 {cc}/min	550 {550}
	Secondary	cm^3 {cc}/min	850 {850}
Catalytic converter			
Type	Front converter		Metal
	Main converter		Monolithic
Air pump			
Capacity		cm^3 {cc}/rev	375 {375}
Output		liter/min	MT 140—200, AT 160—200
Fuel			
Specification			Unleaded premium (RON95 or higher)

*TEN terminal of diagnosis connector is grounded.

37U0FX-509

COMPONENT DESCRIPTIONS

Component	Function	Remark
1-2 switch	Detects gear position (1st, 2nd)	MT only
Actuator (Charge control)	Controls charge control valve	—
Actuator (Double throttle control)	Controls double throttle valve	Installed on extension manifold
Actuator (Turbo control)	Controls turbo control valve	Controlled by two solenoid valves
Actuator (Turbo precontrol)	Controls turbo precontrol valve	Part of turbocharger assembly
Actuator (Wastegate control)	Controls wastegate control valve	Part of turbocharger assembly
Air bypass valve	Reduces sound of intake air entering air cleaner from turbocharger during deceleration	
Air cleaner	Filters air entering throttle chamber	Oil permeated type
Air control valve	Directs air to one of three locations: exhaust port, main converter, or relief air silencer	Consists of two valves: Relief valve Switching valve
Air pump	Supplies secondary air to air control valve	With electromagnetic clutch
Atmospheric pressure sensor	Detects atmospheric pressure; sends signal to control unit	Built in ECU
Catalytic converter	Reduces HC, CO and NOx	—
Charcoal canister	Stores fuel tank fumes when engine is stopped	Contains activated charcoal and air filter
Circuit opening relay	Voltage for fuel pump while engine running	
Clutch switch	Detects clutch condition (engaged/disengaged)	MT only
Crank angle sensor	Detects eccentric shaft angle at 30° intervals and front rotor position; sends signal to control unit	
Dashpot	Prevents sudden throttle valve closing during deceleration	
Diagnosis connector	**Service connector terminals:** 1. EGI self-diagnosis 2. EC-AT self-diagnosis [AT] 3. Initial set 4. Fuel pump check 5. Engine speed output 6. Switch and oxygen sensor monitor 7. Supply battery voltage 8. Ground 9. A/C self-diagnosis 10. Cruise control self-diagnosis 11. Electrical cooling fan self-diagnosis	**25-pin (located near fuse box)** 1. FEN terminal 2. TAT and FAT terminal 3. TEN terminal 4. F/P terminal 5. IG- terminal 6. MEN terminal 7. + B terminal 8. GND terminal 9. TAC and FAC terminal 10. TSC and FSC terminal 11. TFA terminal

Component	Function	Remark
Engine control unit (ECU)	**Detects the following:**	
	1. Engine speed	1. Crank angle sensor
	2. Knocking signal	2. Knock sensor
	3. Vehicle speed	3. Speedometer sensor
	4. Engine coolant temperature	4. Water thermosensor
	5. Intake air temperature	5. Intake air thermosensor
	6. Throttle valve opening angle (full range)	6. Throttle sensor (full range)
	7. Intake manifold pressure	7. Pressure sensor
	8. Atmospheric pressure	8. Atmospheric pressure sensor
	9. Oxygen concentration	9. Oxygen sensor
	10. Air/Fuel ratio	10. Oxygen sensor
	11. Throttle valve opening angle (narrow range)	11. Throttle sensor (narrow range)
	12. Metering oil pump (MOP) position signal	12. MOP position sensor
	13. Fuel temperature	13. Fuel thermosensor
	14. Gear position	14. 1-2 switch (MT)
	15. Clutch condition	15. Clutch switch (MT)
	16. In-gear condition	16. Neutral switch (MT)
	17. Power steering operation	17. P/S pressure switch
	18. Braking signal	18. Stoplight switch
	19. Starter signal	19. Ignition switch
	20. Electrical Load (E/L) condition	20. E/L unit
	21. EGR condition	21. EGR switch
	Control operation of the following:	
	1. Fuel injection system	Injector
	2. Ignition control system	Igniter
	3. Idle speed control (ISC) system	Solenoid valve (idle speed control [ISC])
	4. Pressure regulator control system	Solenoid valve (pressure regulator control)
	5. Secondary air injection system	Solenoid valve (split air bypass [SAB]) Solenoid valve (port air bypass [PAB]) Solenoid valve (switch [SWITCH]) Solenoid valve (relief No.2 [RELIEF 2]) Solenoid valve (relief No.1 [RELIEF 1])
	6. Accelerated warm-up system	Solenoid valve (AWS)
	7. Sequential twin turbocharger control system	Solenoid valve (turbo control No.1 [TCNT1]) Solenoid valve (turbo control No.2 [TCNT2]) Solenoid valve (wastegate control [WGCNT]) Solenoid valve (turbo precontrol [TPCNT]) Solenoid valve (charge control [CCNT]) Solenoid valve (charge relief [CRF])
	8. Exhaust gas recirculation control system	Solenoid valve (EGR)
	9. Double throttle control system	Solenoid valve (DTCNT)
	10. A/C control system	A/C relay
	11. Electric cooling fan control system	Fan relay
	12. Fuel pump control system	Fuel pump relay
	13. Lock-up control system	EC-AT CU
	14. Slip control system	EC-AT CU
	15. Self-diagnosis function	Self-Diagnosis Checker or DT-S1000 (SST)
	16. Monitor function	Self-Diagnosis Checker or DT-S1000 (SST)
	17. Simulation function	DT-S1000 (SST)
	18. Real-time monitor function	DT-S1000 (SST)
	19. Back up function	

Component	Function	Remark
Fuel filter	Filters particles from fuel	—
Fuel pump	Provides fuel to injectors	• Operates while engine running • In fuel tank
Igniter	Receives spark signal from ECU and generates high voltage in ignition coil	—
Ignition switch (START position)	Sends engine cranking signal to ECU	—
Inhibitor switch (AT)	Detects load condition; sends signal to ECU	—
Injector	Injects fuel into intake port	• Controlled by signal from ECU (side-feed type)
Intake air thermosensor	Detects intake air temperature; sends signal to ECU	• Installed in extension manifold
Knock sensor	Detects engine knocking; sends signal to ECU	—
Main relay	Supplies current to output devices and ECU	—
Neutral/Clutch switches (MT)	Detects in-gear condition; sends signal to ECU	• Switch is ON in neutral
Oxygen sensor	Detects oxygen concentration; sends signal to ECU	• Zirconia and platinum coat
PCV valve	Controls blowby gas introduced into engine	—
Pressure regulator	Adjusts fuel pressure supply to injectors	—
Pressure sensor	Detects intake manifold pressure; sends signal to ECU	—
P/S pressure switch	Detects P/S operation	• P/S switch ON when steering wheel turned
Pulsation damper	Absorbs fuel pulsations	—
Solenoid valve (ISC)	Supplies bypass air into intake manifold	• Controlled by duty signal from ECU
Solenoid valve (PRC)	Controls vacuum to pressure regulator	—
Solenoid valve (SAB)	Controls split air volume	• Installed in ACV
Solenoid valve (SWITCH)	Controls switching valve of air control valve	• Installed below extension manifold
Solenoid valve (RELIEF2)	Controls relief valve	• Installed in ACV
Solenoid valve (RELIEF1)	Controls relief valve	• Installed below extension manifold
Solenoid valve (PARB)	Controls port air volume	• Installed in ACV
Solenoid valve (AWS)	Controls accelerated warm-up system	• Installed below extension manifold
Solenoid valve (TCNT1)	Controls turbo control valve	• Installed in ACV (pressure applied)
Solenoid valve (TCNT2)	Controls turbo control valve	• Installed below extension manifold (vacuum applied)
Solenoid valve (WGCNT)	Controls wastegate valve	• Controlled by duty signal from ECU
Solenoid valve (TPCNT)	Controls turbo precontrol valve	• Controlled by duty signal from ECU
Solenoid valve (CCNT)	Controls charge control valve	• Installed below extension manifold
Solenoid valve (CRF)	Controls charge relief valve	• Installed below extension manifold
Solenoid valve (EGR)	Controls EGR valve	• Installed below extension manifold
Solenoid valve (DTCNT)	Controls double throttle valve	• Installed below extension manifold
Solenoid valve (PURGE)	Controls evaporative fumes from charcoal canister to intake manifold	• Controlled by duty signal from ECU
Speedometer sensor	Detects vehicle speed; sends signal to ECU	• Installed in instrument cluster
Stoplight switch	Detects braking; sends signal to ECU	—
Throttle body	Controls intake air amount	—
Throttle sensor	Detects throttle valve opening angle	• Installed on throttle body
Water thermosensor	Detect coolant temperature; send signals to ECU	• Installed in engine

ECU RELATIONSHIP DIAGRAM

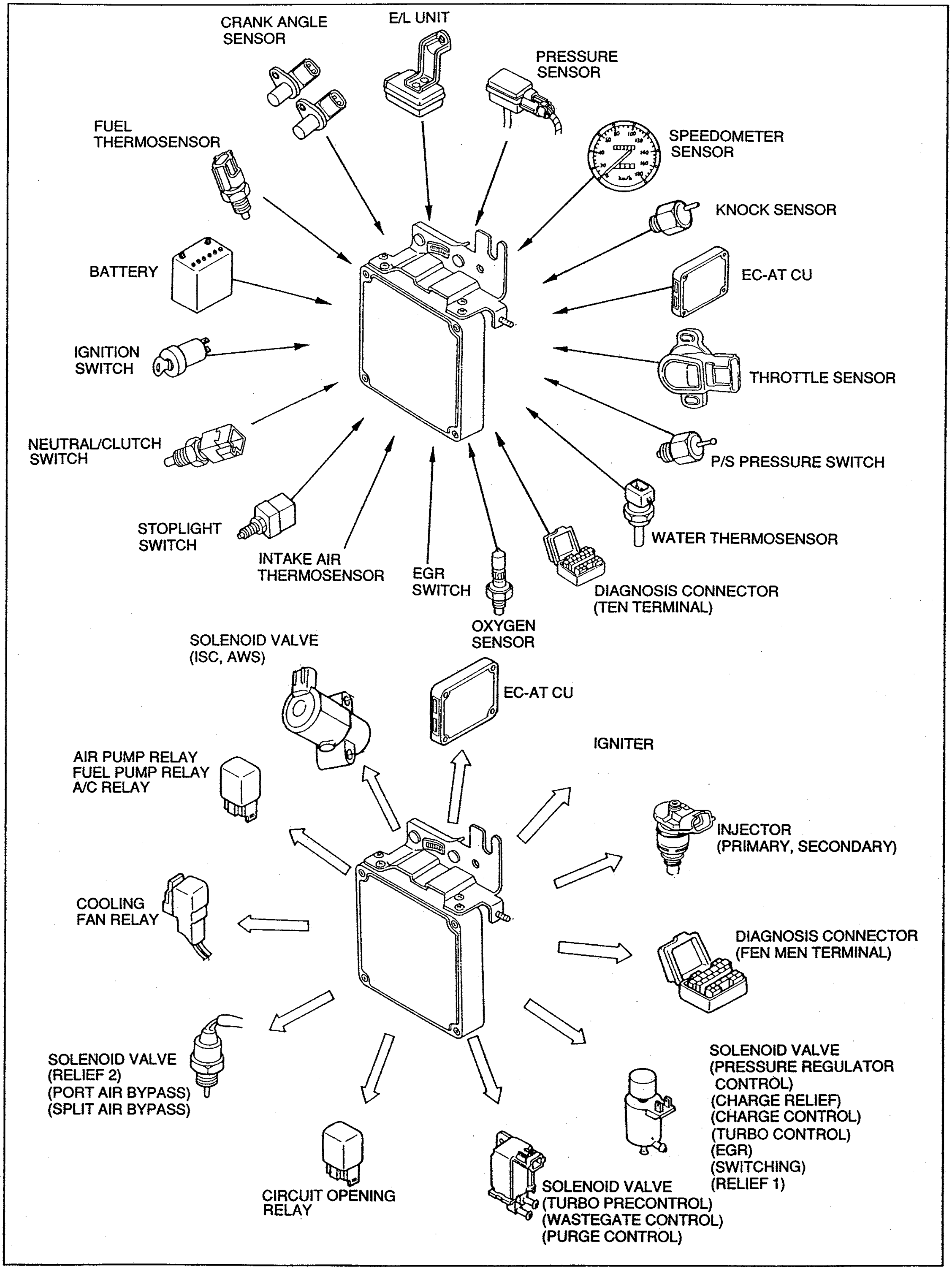

37U0FX-511

RELATIONSHIP CHART

OUTPUT DEVICE / INPUT DEVICE		INJECTOR					SOLENOID VALVE																				
		FUEL INJECTION AMOUNT	FUEL INJECTION TIMING	CIRCUIT OPENING RELAY	FUEL PUMP RELAY	IGNITER	IDLE-SPEED CONTROL SYSTEM	ACCELERATED WARM-UP SYSTEM	DOUBLE THROTTLE CONTROL SYSTEM	PRESSURE REGULATOR CONTROL	TURBO PRE CONTROL	WASTEGATE CONTROL	TURBO CONTROL	CHARGE CONTROL	CHARGE RELIEF	RELIEF 1	SWITCHING	AIR CONTROL VALVE	PORT AIR BYPASS	RELIEF 2	PURGE CONTROL	EGR	EC-AT CU	MOP	A/C RELAY	AIR PUMP RELAY	SERVICE CODE	MONITOR LAMP
CRANK ANGLE SENSOR	NE SIGNAL	○	○	○	○	○	○	○	○	○	○	○	○	○	○	○	○	○	○	○	○	○	○	○	○	○	○	
	G SIGNAL		○			○																					○	
THROTTLE SENSOR	NARROW RANGE	○				○	○		○	○						○	○	○	○	○	○	○	○	○		○	○	
	FULL RANGE	○	○			○	○				○	○	○	○	○	○						○			○	○	○	○
WATER THERMOSENSOR		○				○	○	○	○		○	○				○	○	○	○	○	○	○			○		○	
INTAKE AIR THERMOSENSOR		○				○	○																				○	
FUEL THERMOSENSOR		○			○	○	○			○											○						○	
PRESSURE SENSOR		○			○	○	○				○	○	○	○	○	○	○	○	○	○	○	○		○		○	○	
OXYGEN SENSOR		○														○		○	○		○						○	○
KNOCK SENSOR						○																					○	○
SPEEDOMETER SENSOR							○																				○	
MOP POSITION SENSOR																								○			○	
E/L UNIT		○				○	○																					○
A/C SWITCH		○				○	○																					○
P/S PRESSURE SWITCH		○				○	○																					○
IGNITION SWITCH (ST SIGNAL)		○		○	○	○	○	○		○			○				○								○	○		○
STOPLIGHT SWITCH							○																					○
NEUTRAL SWITCH		○				○	○	○		○	○	○	○	○	○	○	○	○	○	○	○	○			○	○		○
CLUTCH SWITCH		○				○	○	○		○	○	○	○	○	○	○	○	○	○	○	○	○			○	○		○
1-2 SWITCH											○	○	○	○	○											○		
EGR SWITCH (CALIF.)																						○					○	
MILEAGE SWITCH																○		○	○	○								
HEAT HAZARD SENSOR																										○		
SOLENOID VALVE SIGNAL	SHIFT A					○			○		○	○	○	○	○		○	○					○			○		
	SHIFT B					○			○		○	○	○	○	○		○	○					○			○		
REDUCE TORQUE SIGNAL						○																	○					
SLIP LOCK-UP SIGNAL																							○					
INHIBITOR SIGNAL		○				○	○	○		○	○	○	○	○	○	○	○	○	○	○	○	○	○		○	○		○
DIAGNOSIS CONNECTOR (TEN-TERMINAL)		○					○																				○	○
ATMOSPHERIC PRESSURE SENSOR		○				○	○				○	○	○	○	○	○		○			○						○	

37U0FX-512

ENGINE CONTROL OPERATION CHART
Output devices and engine condition

ENGINE CONDITION / OUTPUT DEVICE		CRANKING (COLD ENGINE)	WARMING UP (DURING IDLE)	MEDIUM LOAD		ACCELE-RATION	HEAVY LOAD	DECELE-RATION	IDLE	IGN : ON (ENGINE NOT RUNNING)	REMARK
				COLD	WARM						
INJECTOR	FUEL INJECTION AMOUNT	Rich			Normal	Rich		Fuel cut*	Rich	No injection	
	PRIMARY	Operate						Not operate	Operate		
	SECOND	Not operate				Operate		Not operate			
CIRCUIT OPENING RELAY		ON								OFF	
FUEL PUMP RELAY		OFF (Low speed)				ON (High speed)		OFF (Low speed)			
IGNITER		Fixed at BTDC 5°	Advanced: Depends on engine condition						Fixed at ATDC 5° (L) ATDC 20° (T)	—	
SOLENOID VALVE	ACCELERATED WARM-UP SYSTEM (AWS)	ON		OFF							
	IDLE SPEED CONTROL SYSTEM (ISC)	ON (Feedback duty)		ON (Fixed duty)					ON (Feedback duty)		
	DOUBLE THROTTLE CONTROL (DTCNT)	ON (Closed)			OFF (Open)	ON (AT only)	OFF (Open)				
	TURBO PRECONTROL (TPCNT)	OFF (Closed)		Depends on engine condition				OFF (Closed)			
	WASTEGATE CONTROL (WGCNT)	ON				Depends on engine condition		OFF (Closed)			
	TURBO CONTROL (TCNT)	OFF (Closed)				ON (Open)		OFF (Closed)			
	CHARGE CONTROL (CCNT)	ON (Closed)				OFF (Open)		ON (Closed)			
	CHARGE RELIEF (CRF)	ON (Open)				OFF (Closed)		ON (Open)		OFF (Closed)	
	RELIEF 1 (RELIEF 1)	OFF (Closed)			ON (Open)	OFF (Close)					
	SWITCHING (SWITCH)	OFF (Port)			ON (Split)			OFF (Port)			
	SPLIT AIR BYPASS (SAB)	OFF (Closed)			ON (Open)			OFF (Closed)			
	PORT AIR BYPASS (PAB)	OFF (Closed)		ON (Open)		OFF (Closed)					
	RELIEF 2 (RELIEF 2)	ON (Open)		OFF (Closed)							
	PRESSURE REGULATOR CONTROL (PRC)	OFF (Vacuum to pressure regulator)							*ON	OFF	*During hot start only
	PURGE CONTROL (PURGE)	OFF			ON (Purge)	OFF					
	EXHAUST GAS RECIRCULATION (EGR)	OFF (EGR cut)			*ON (EGR)	OFF (EGR Cut)					*Engine speed: 1,700— 3,850 rpm
A/C RELAY		OFF (A/C Cut)	ON			OFF (A/C Cut)	ON				
COOLING FAN RELAY		OFF			Depends on engine coolant temperature						
METERING OIL PUMP (MOP)		OFF	ON							OFF	

37U0FX-513

INTAKE AIR SYSTEM

OUTLINE

This system supplies and controls the amount of air required by the engine for operation.

- Air taken in through the fresh air duct is filtered through the air cleaner and then pressurized by the turbocharger. The pressurized air is cooled as it next passes through the intercooler to reduce its temperature and increase its density. The pressurized air is then sent to the combustion chamber through the throttle body, extension manifold, and intake manifold.
- A resonance chamber is fitted after the fresh air duct to reduce intake air noise.

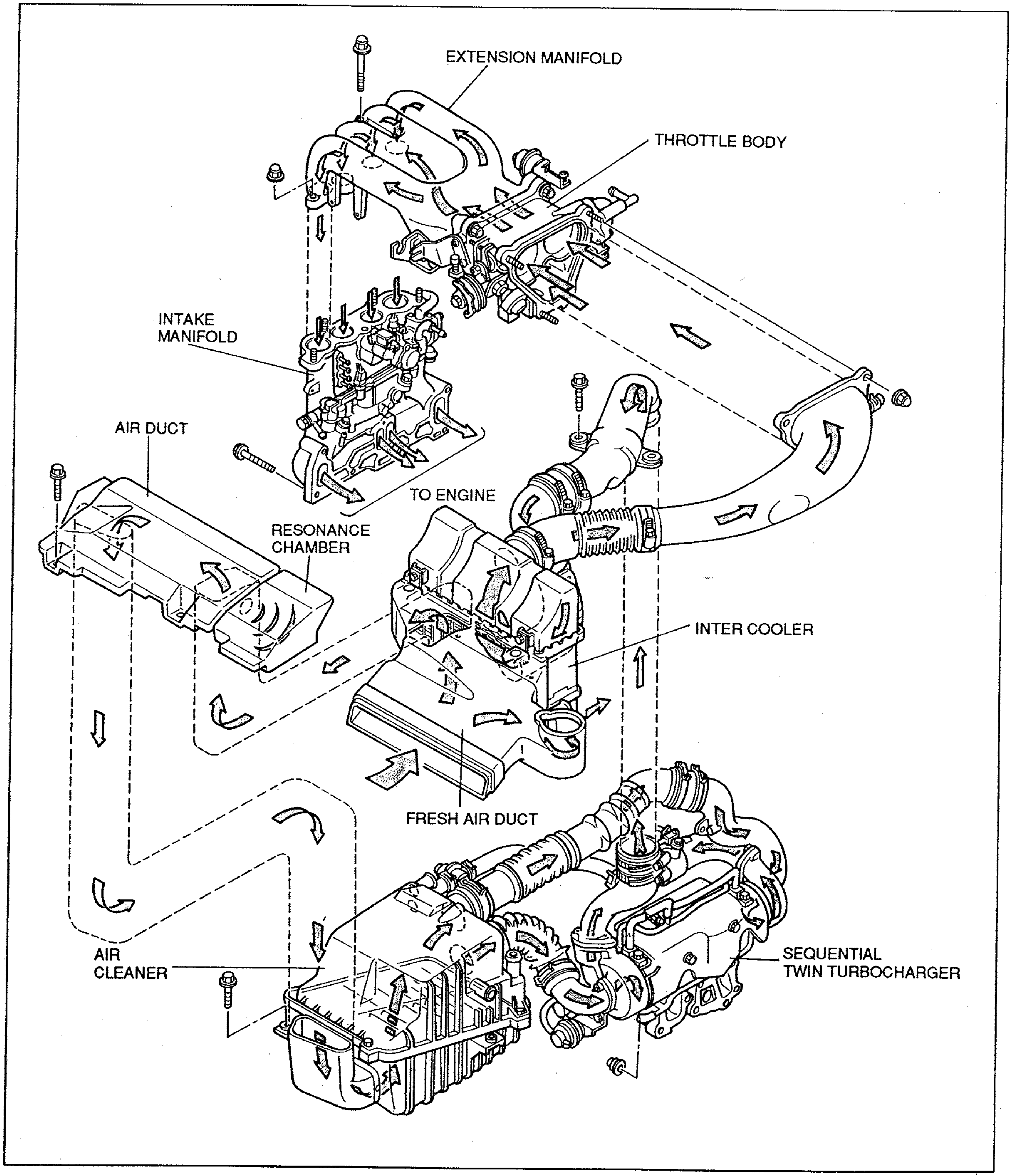

37U0FX-514

INTERCOOLER

- An air-to-air intercooler is mounted at the front of the vehicle to cool the intake air as air flows over the intercooler while the vehicle is moving.
- By cooling the heated air from the turbocharger, the charging efficiency (air amount) increases, preventing knocking (preignition) in the combustion chamber.

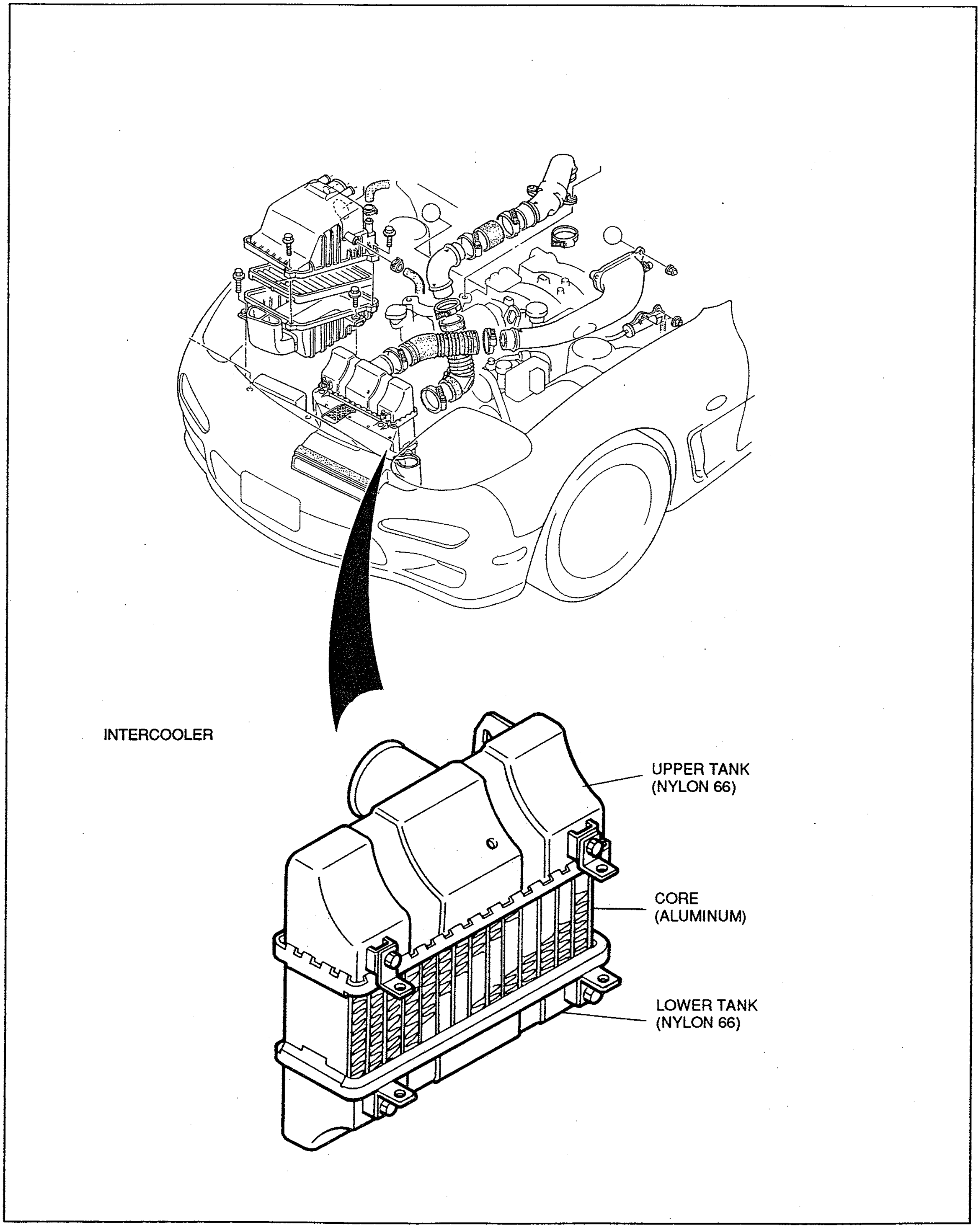

THROTTLE BODY

- The throttle body is a two-stage, three-barrel type. To assure smoothness, a bearing is used to support the shaft of the secondary throttle valve.
- The throttle body consists of the throttle valve, which regulates the intake air amount; the throttle sensor, which detects the throttle opening amount; the thermowax unit, which controls engine speed during fast idle; and the dashpot, which controls deceleration to reduce deceleration shock.
- The relative angle between the primary and secondary throttle valves differs between MT and AT vehicles.

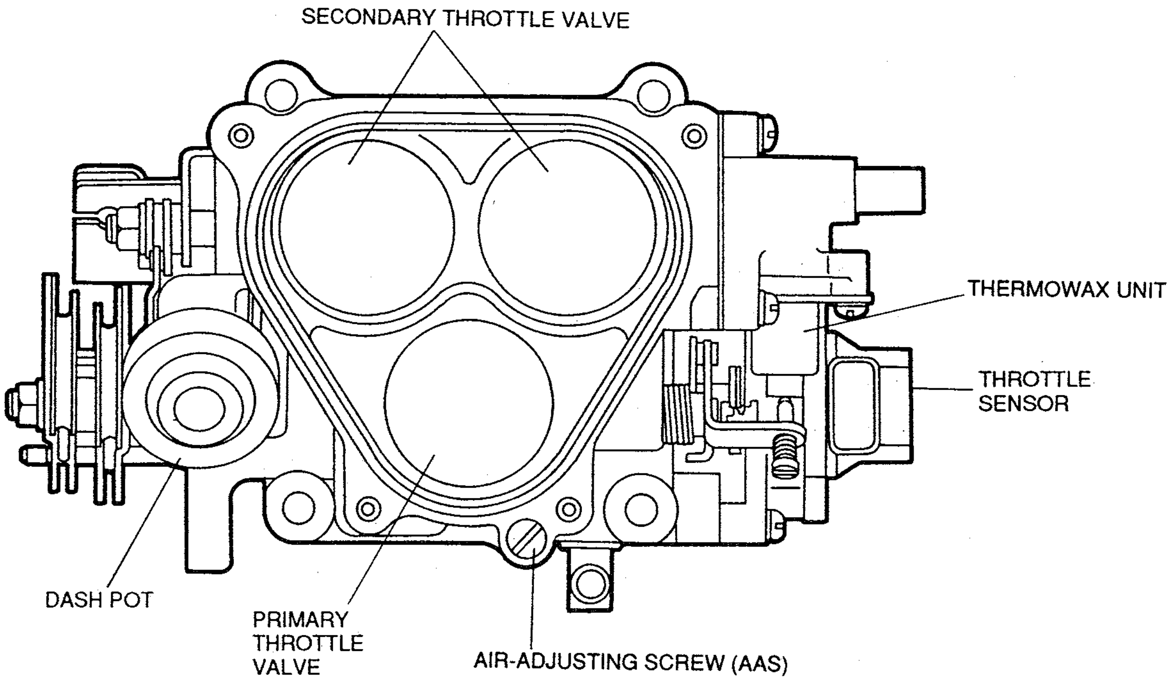

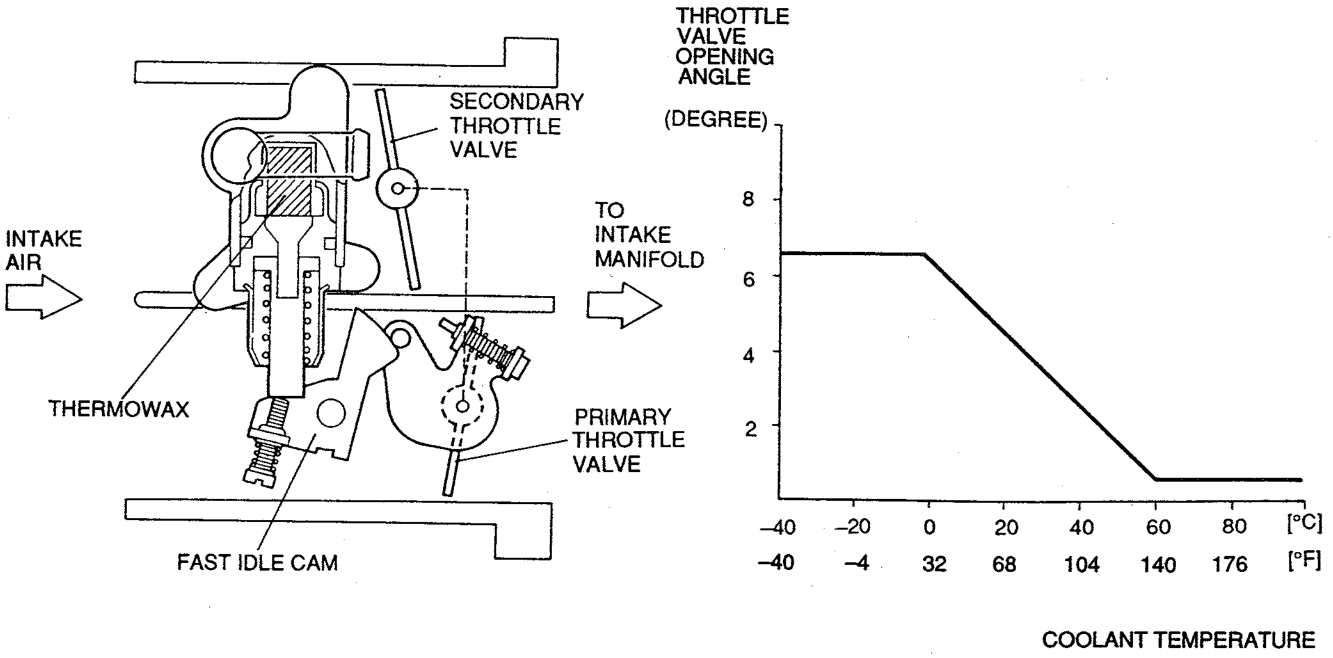

37U0FX-516

THROTTLE SENSOR

- The throttle sensor detects two kinds of throttle opening angles: narrow range and full range. The learning control performed in the ECU makes adjustment unnecessary except when replacing the sensor.
- The narrow-range indication is used to judge when the throttle is fully closed and detects the engine idle range, the full-range indication detects the degree of acceleration and is used to control operation of the turbochargers.

Characteristics

- The throttle sensor has linear characteristics in both the narrow and full ranges.
- The narrow range portion indicates full throttle opening when the throttle opening angle exceeds 40 degrees.

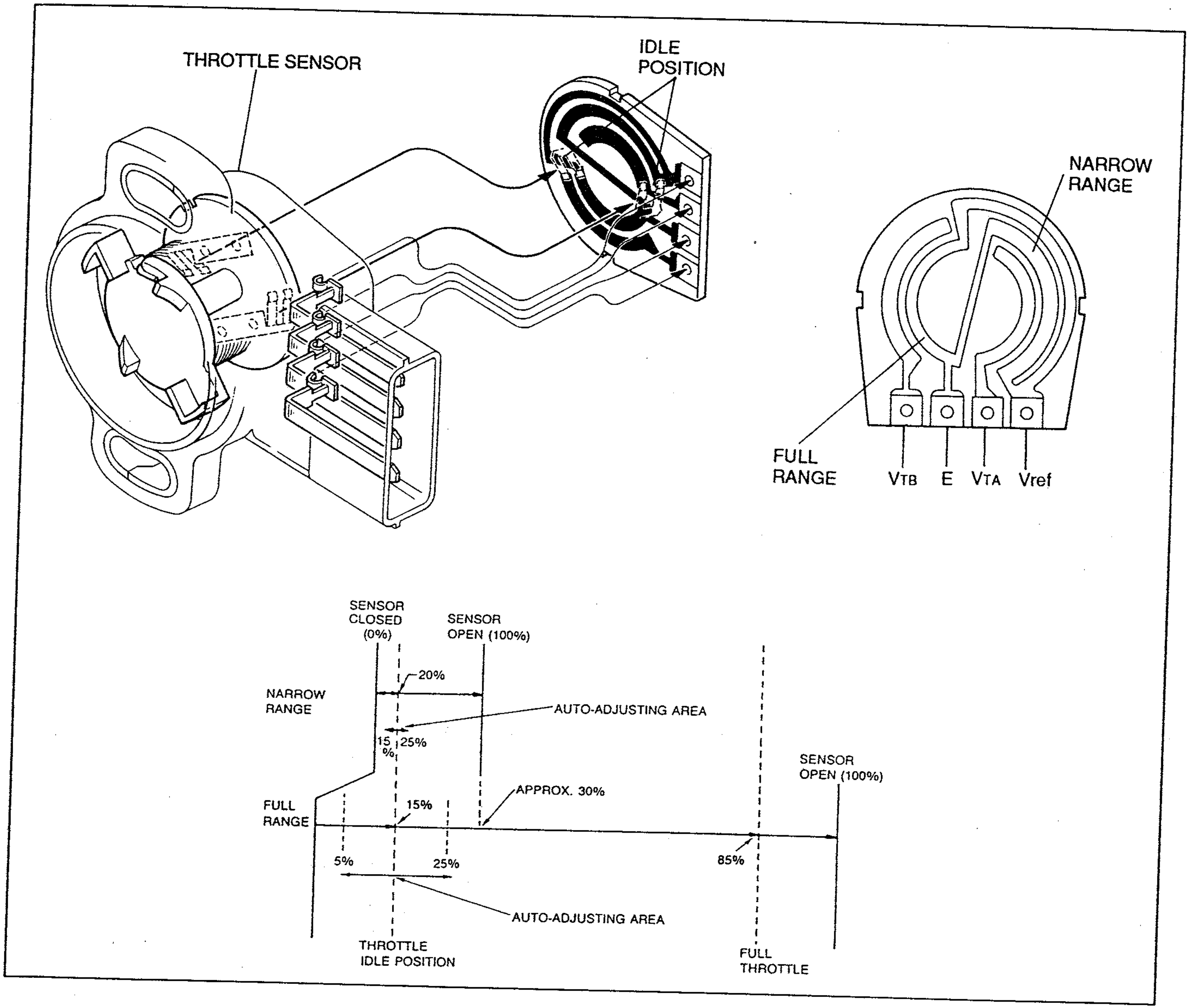

37U0FX-517

Throttle-idle-position auto-adjusting system

Throttle-idle-position automatic adjusting system is incorporated within the ECU.
This system automatically compensates for certain variations in the output signal of the throttle sensors.
At idle, the narrow range is set to output a signal of 20% of full-open. With the throttle idle position automatic adjusting system, the ECU will compensate for actual output values of 15%—25%.
If the output is less than 15% or more than 25% at idle, the ECU fixes the value at 15% and 25% respectively for fail-safe operation.
Operation for the full range is the same. The sensor is set to register a 15% signal at idle, and the ECU compensates within the range from 5%—25%. If over or under the signal is fixed at 5% and 25% respectively for fail-safe operation.

SEQUENTIAL TWIN TURBOCHARGER CONTROL SYSTEM

OUTLINE

The sequential twin turbocharger system has been designed to provide improved engine performance. As commonly known, the turbocharger is a very effective means of pressurizing the intake air of an engine in the higher rpm ranges. But, traditionally this method does not give much added power in the low rpm ranges. This new two-stage dual-turbocharger system eliminates this problem.

Structural View

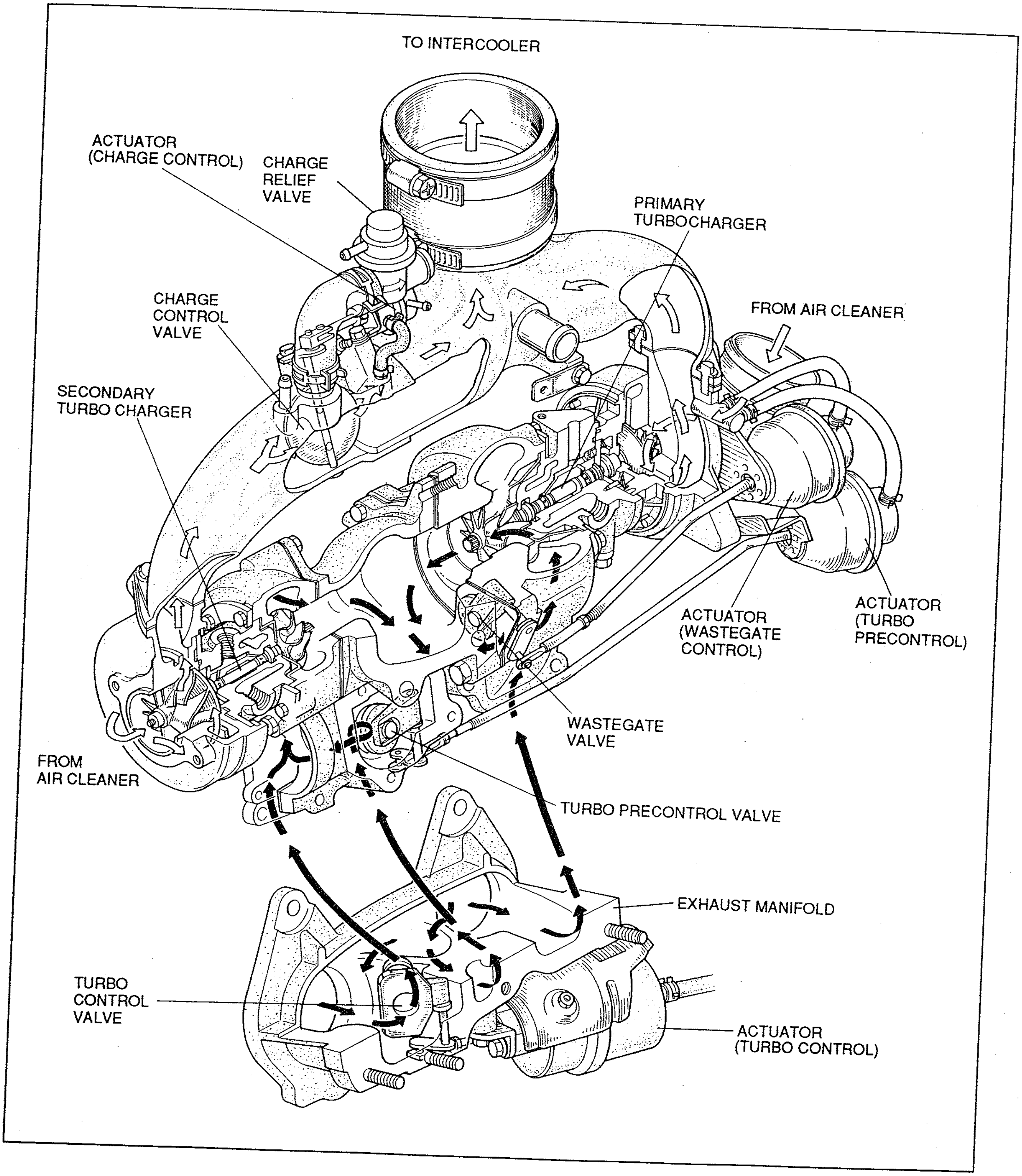

37U0FX-518

- The sequential twin turbocharger system consists of two turbochargers (primary and secondary) fitted back-to-back. In the low-speed, light-load range, turbocharging is done only by the primary turbocharger. In the high-speed, heavy-load range, turbocharging is handled by the primary and secondary turbochargers working in union.
- To prevent a drop of boost pressure when the secondary turbocharger begins to operate, the secondary turbocharger is made to spin prior to its operation.
- The sequential twin turbocharger system consists of the primary and secondary turbochargers and the related actuators and solenoid valves (turbo precontrol, turbo main control, wastegate control, charge control, charge relief).

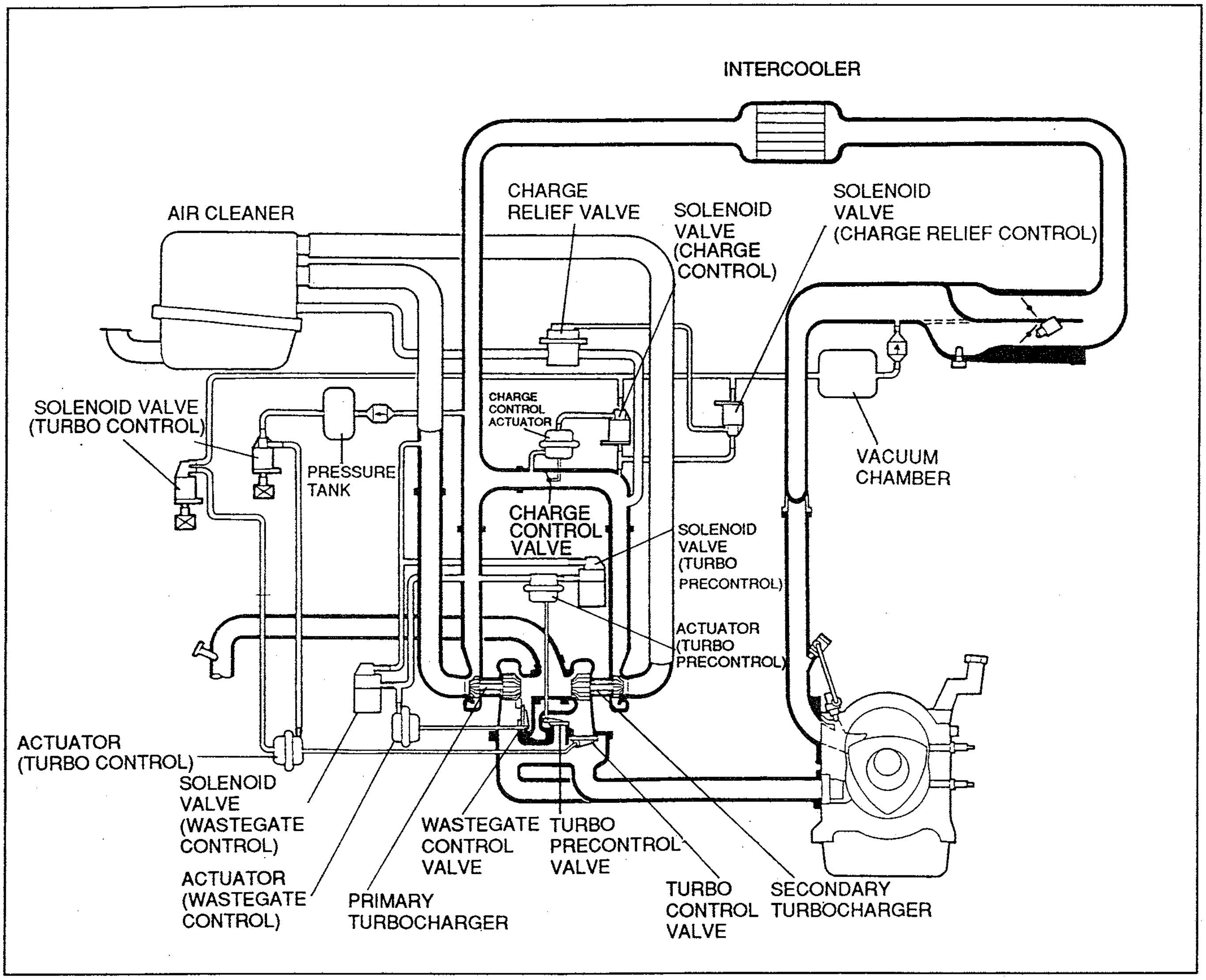

37U0X-519

Operation

Engine speed		Low-speed	→	High-speed
Devices		**Light-load**	**→**	**Heavy-load**
Turbocharger	Primary	Boost pressure		
	Secondary	Stop	Preliminary rotation	Boost
Solenoid valve	Turbo precontrol	Duty control		Duty 5% (fully open)
	Wastegate control	Duty 95% (fully closed)		Duty control
	Charge relief	OFF		ON
	Charge control	ON		OFF
	Turbo control	OFF		ON

37U0FX-520

Low-speed, light-load range

- In the low-speed, light-load range, boost is produced by only the primary turbocharger. At this time, the air passage to the secondary turbocharger is closed by the turbo control valve. The turbo precontrol valve is opened or closed by supercharge boost pressure control (duty control).

Medium-speed, Medium-load range

- In the medium-speed, medium-load range, the turbo precontrol valve is almost fully opened, and preliminary supercharge boost pressure generated by the secondary turbocharger is released to the air cleaner through the charge relief valve.
  Because the secondary turbocharger is made to spin before its actual operation, the feeling of sudden added boost upon transition from primary only to primary plus secondary turbocharger operation is reduced.

High-speed, heavy-load range

- In the high-speed heavy-load range, the turbo control valve is opened, and maximum boost pressure is created by the primary and secondary turbochargers. When both turbochargers are actuated, supercharged pressure control (duty) is done by the wastegate control valve.

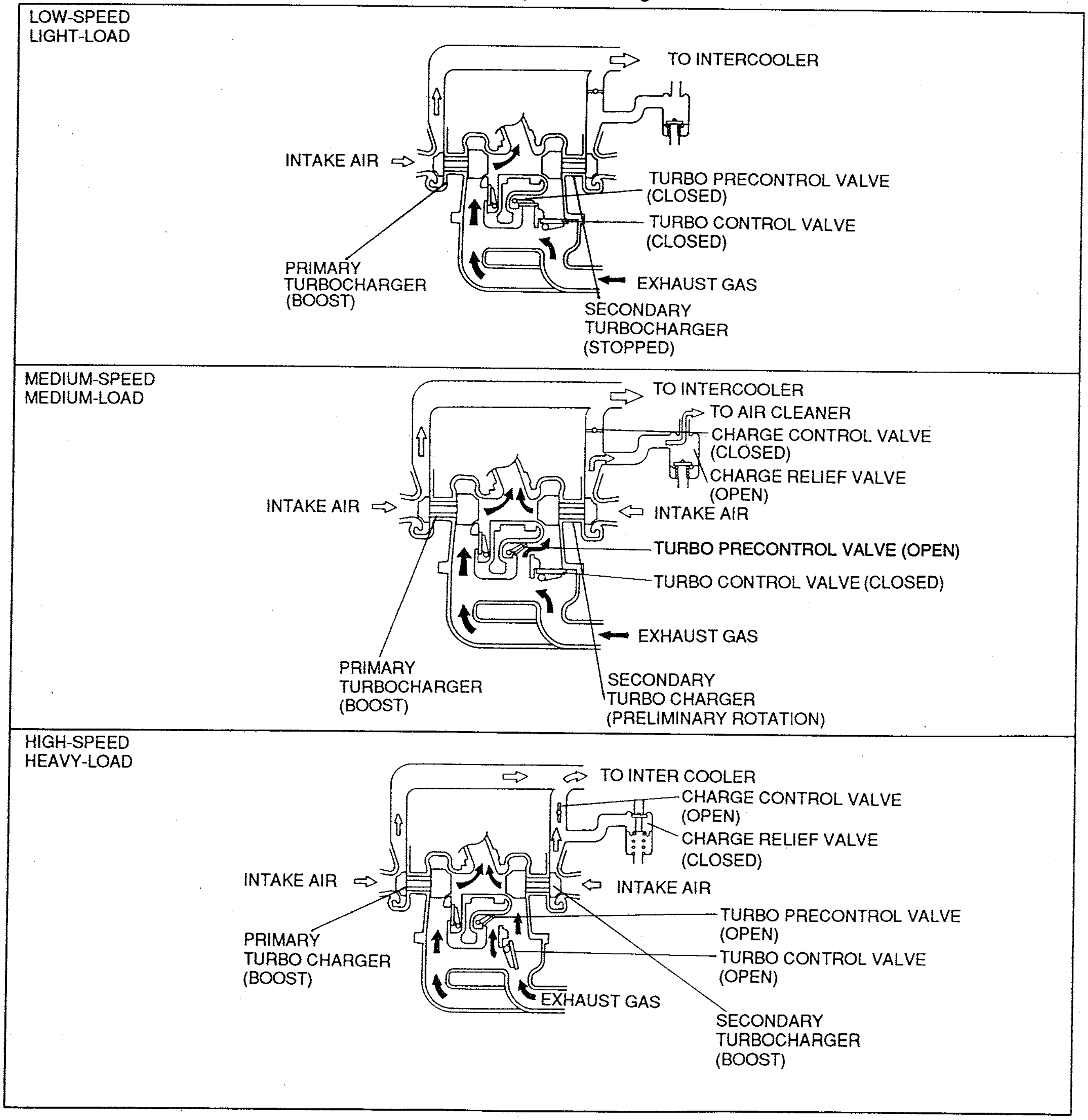

37U0FX-521

SECONDARY TURBOCHARGER OPERATION CONTROL

Solenoid valve (Turbo precontrol)

- The ECU outputs duty signals to control the solenoid valve turbo precontrol based on signals from the crank angle sensor, the throttle sensor (full range), and pressure sensor.
- The ECU controls the boost pressure applied to the turbo precontrol valve actuator by regulating the solenoid valve, and rotates the secondary turbocharger in the appropriate engine speed and load ranges.

Solenoid Valve (Charge Relief)

- This valve releases to the air cleaner the boost pressure generated during preliminary rotation of the secondary turbocharger.

Solenoid Valve (Charge Control)

- During operation of the primary turbocharger, this valve closes the air path to the secondary turbocharger when it is not operating (including the preliminary rotation range).

Solenoid Valve (Turbo Control 1, 2)

- During operation of just the primary turbocharger, this valve closes the turbo control valve to prevent exhaust gas from entering the second turbocharger.

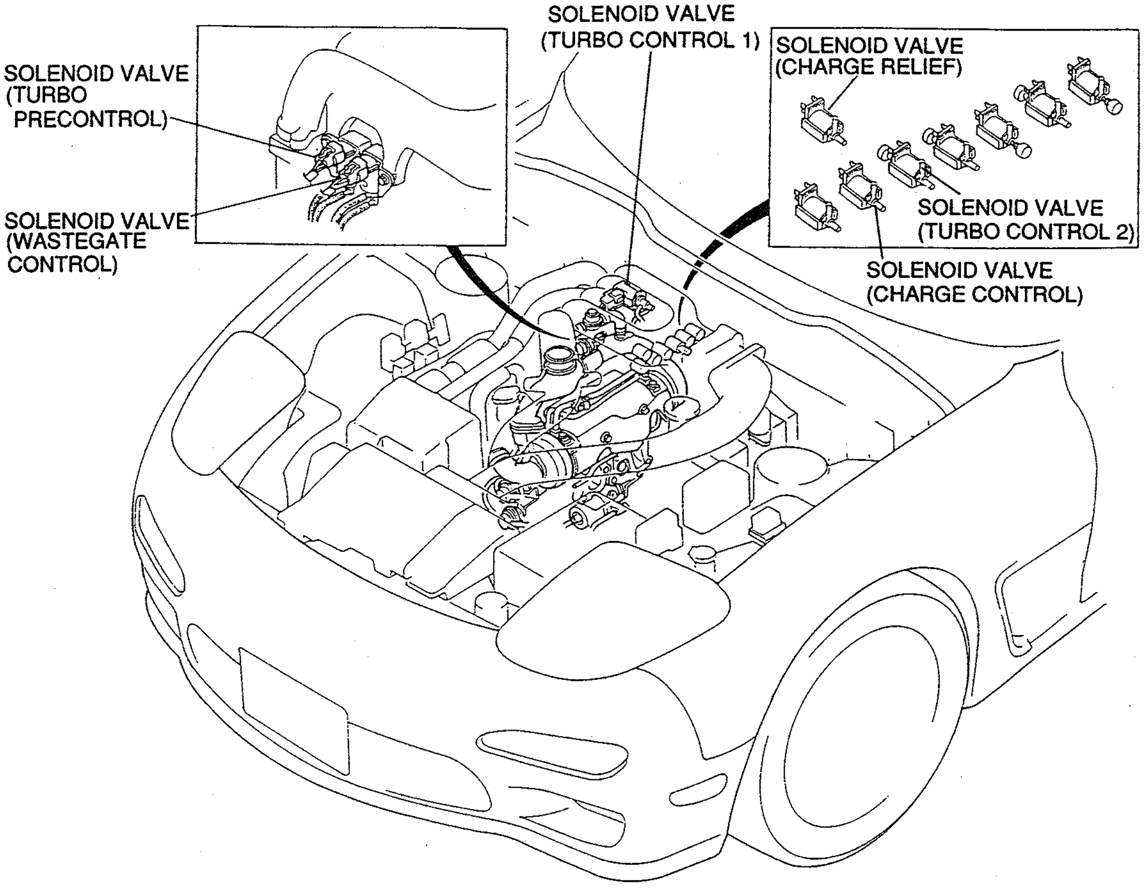

37U0FX-522

BOOST PRESSURE CONTROL SYSTEM

- The boost pressure control includes the turbo precontrol valve and wastegate control valve.

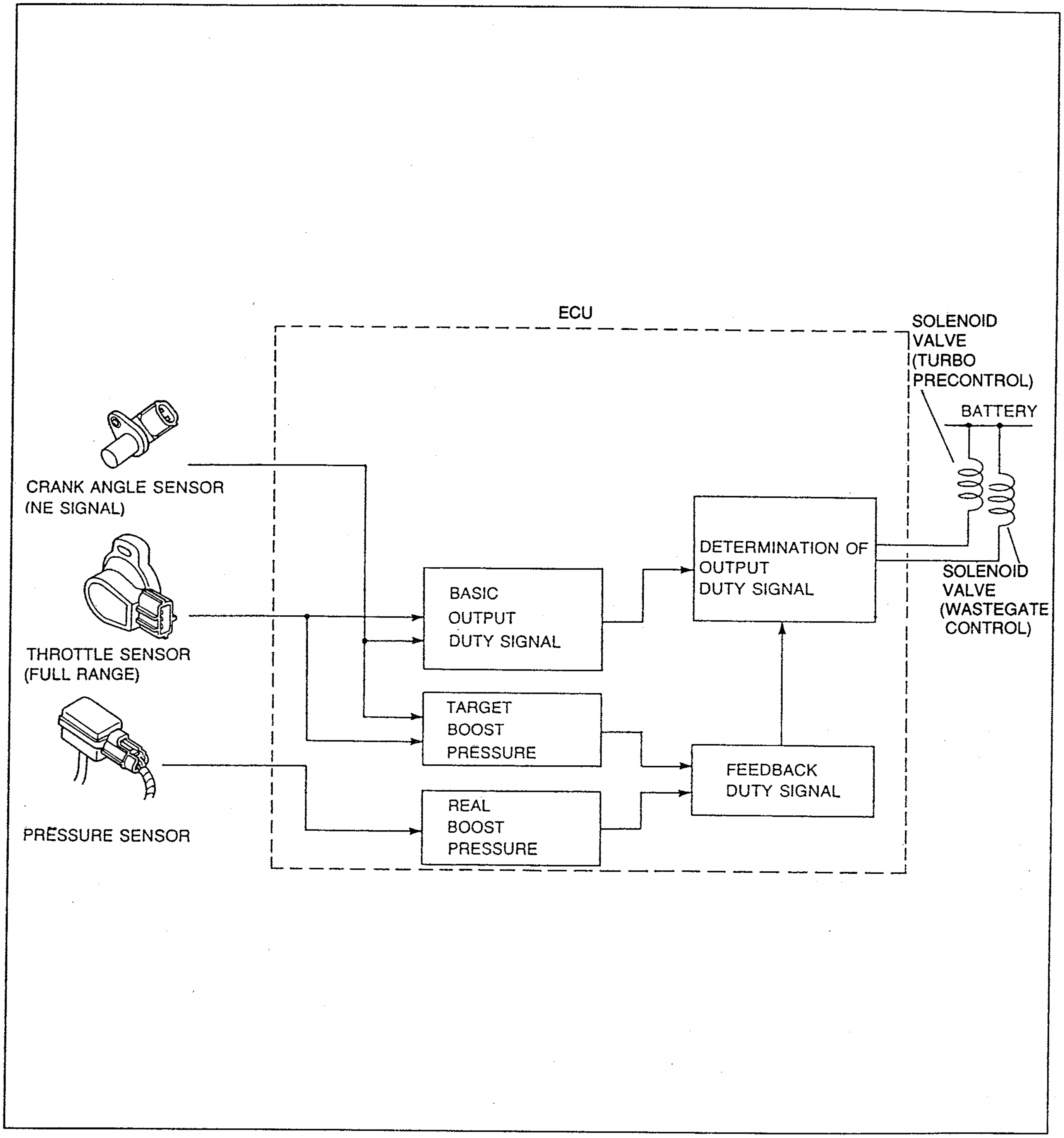

37U0FX-523

Operation

1. The duty signal from ECU is varied from 5% to 95% based on information from the full-range throttle sensor and the crank angle sensor (NE signal). This output duty signal is determined within the ECU by the basic output duty signal and the feedback duty signal.
2. The duty signal is sent to the duty solenoid valve.
3. As the duty increases, the duty solenoid valve opening increases, and the pressurized air acting on the actuator decreases.
4. The wastegate valve then closes, and the turbo boost pressure increases.
   The ECU contains the data to set the maximum turbo boost pressure.
   The boost pressure is basically determined by the throttle opening angle and engine speed.

SEQUENTIAL TWIN TURBOCHARGER

- Water cooling is used to improve the durability of the turbochargers
- A turbo precontrol actuator and wastegate control valve are mounted to the assembly.

ACTUATOR (TURBO CONTROL)

- The actuator controls the turbo control valve
  It uses the boost pressure of the primary turbocharger and the vacuum within the intake manifold to open and close the turbo control valve.

CHARGE RELIEF VALVE

- The charge relief valve release to the air cleaner pressure generated during boost pressure control of the primary turbocharger and during preliminary rotation of the secondary turbocharger.

CHARGE CONTROL VALVE

- This valve controls the transition from primary to combined (primary and secondary) turbocharger operation.
- When the charge control valve vacuum is applied to actuator chamber A, pressure is generated by the primary turbo and applied to chamber B resulting in valve position closed. In the full-open valve position, secondary turbocharger pressure is applied to chamber A, and primary turbocharger pressure is applied to chamber B. The change control solenoid valve. When the pressure applied to both chambers becomes equal, the charge control valve is opened by the spring force of the actuator.

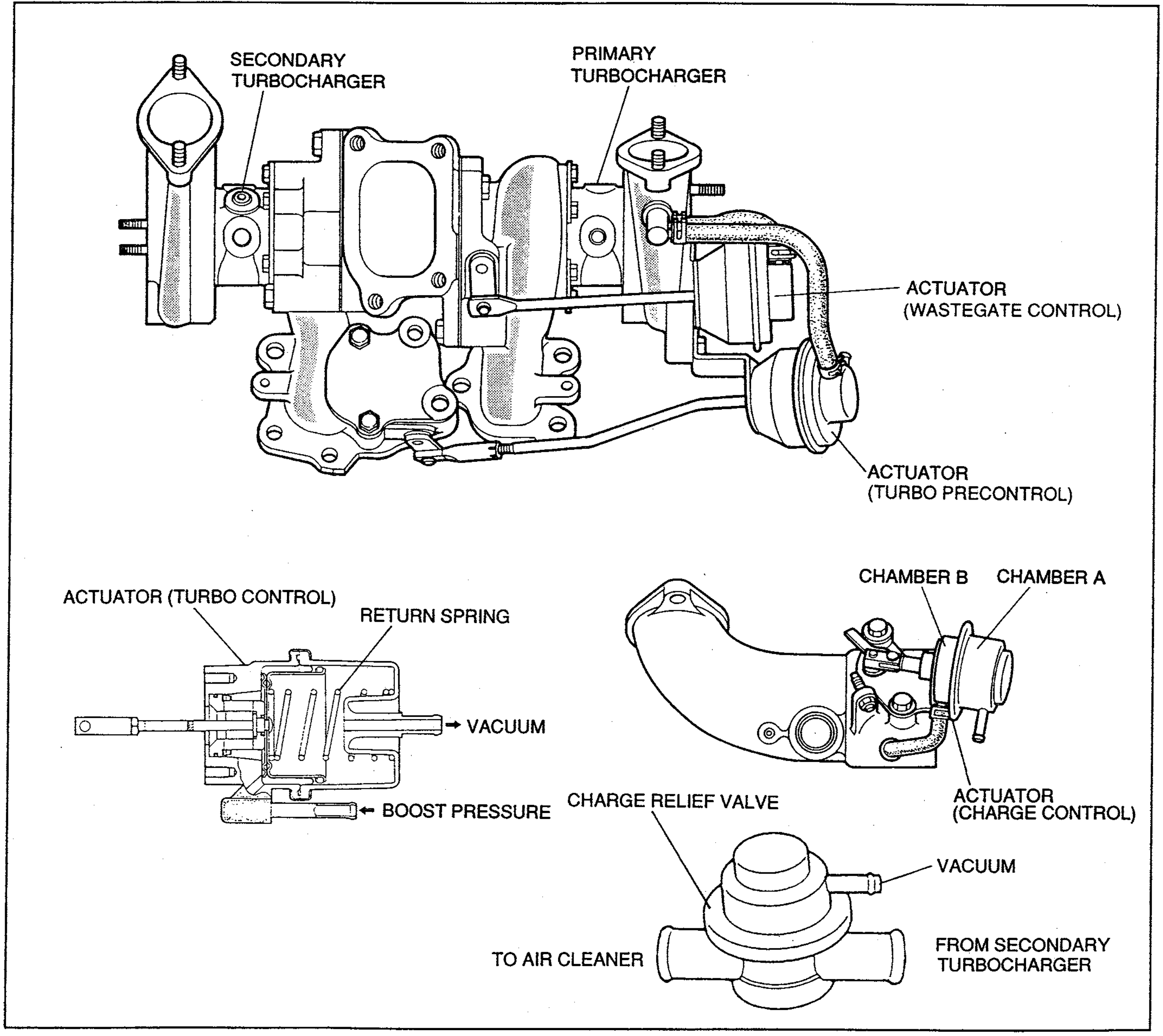

37U0FX-524

FUEL SYSTEM

OUTLINE

This system supplies the necessary fuel at a constant pressure to the injectors.

Fuel is metered and injected into the intake manifold according to the injection control signals from the ECU.

This system consists of the fuel pump, fuel filters, pressure regulator, pulsation dumper, solenoid valve (PRC), and injectors.

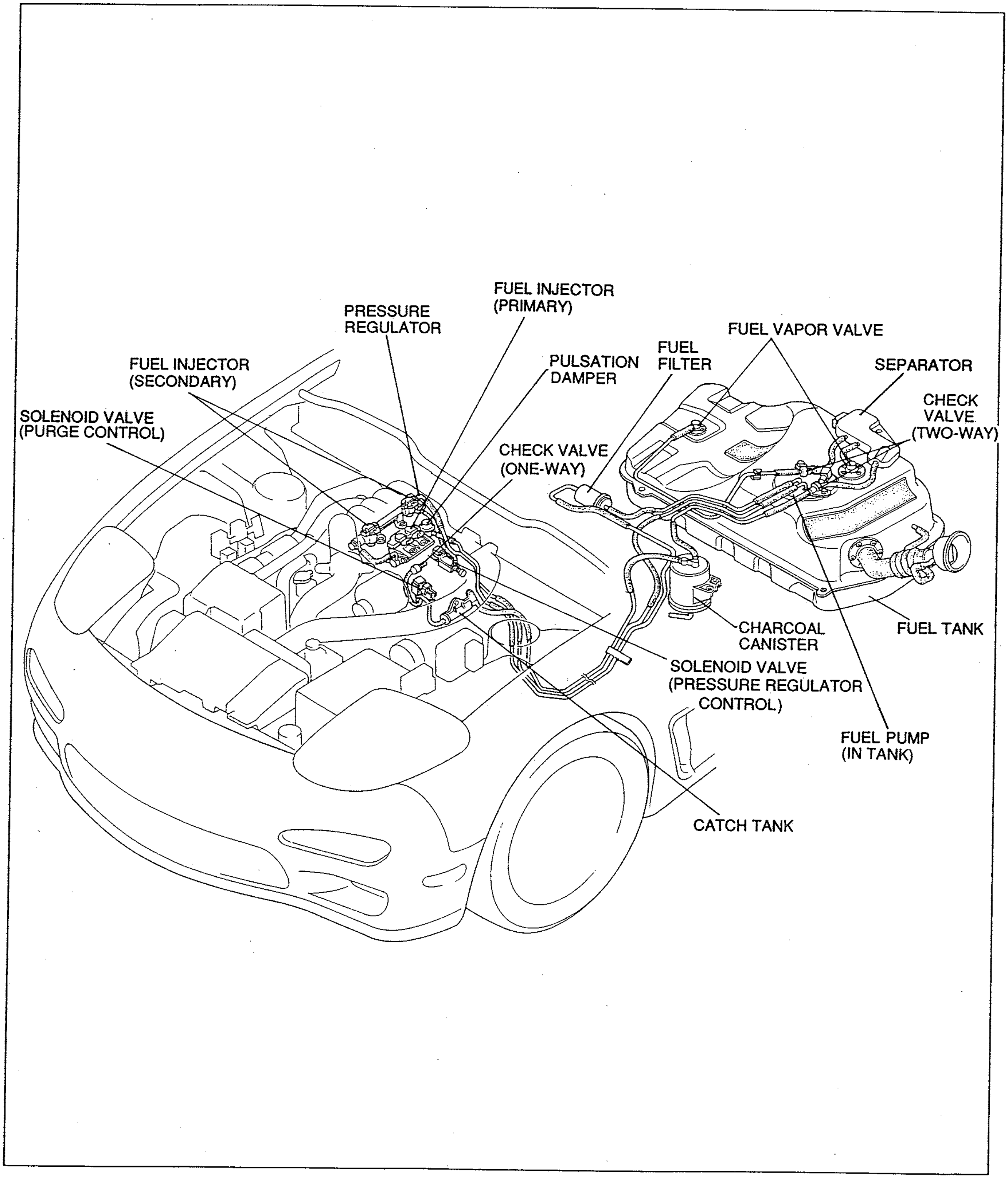

37U0FX-525

INJECTOR

Side feed injectors are employed for the 13B engine.
Fuel is fed through the side of the injector near the bottom of the injector body.
Because of this structure, fuel vapor generated by engine heat is easily carried away by the return fuel, providing superior startability when the engine is hot.

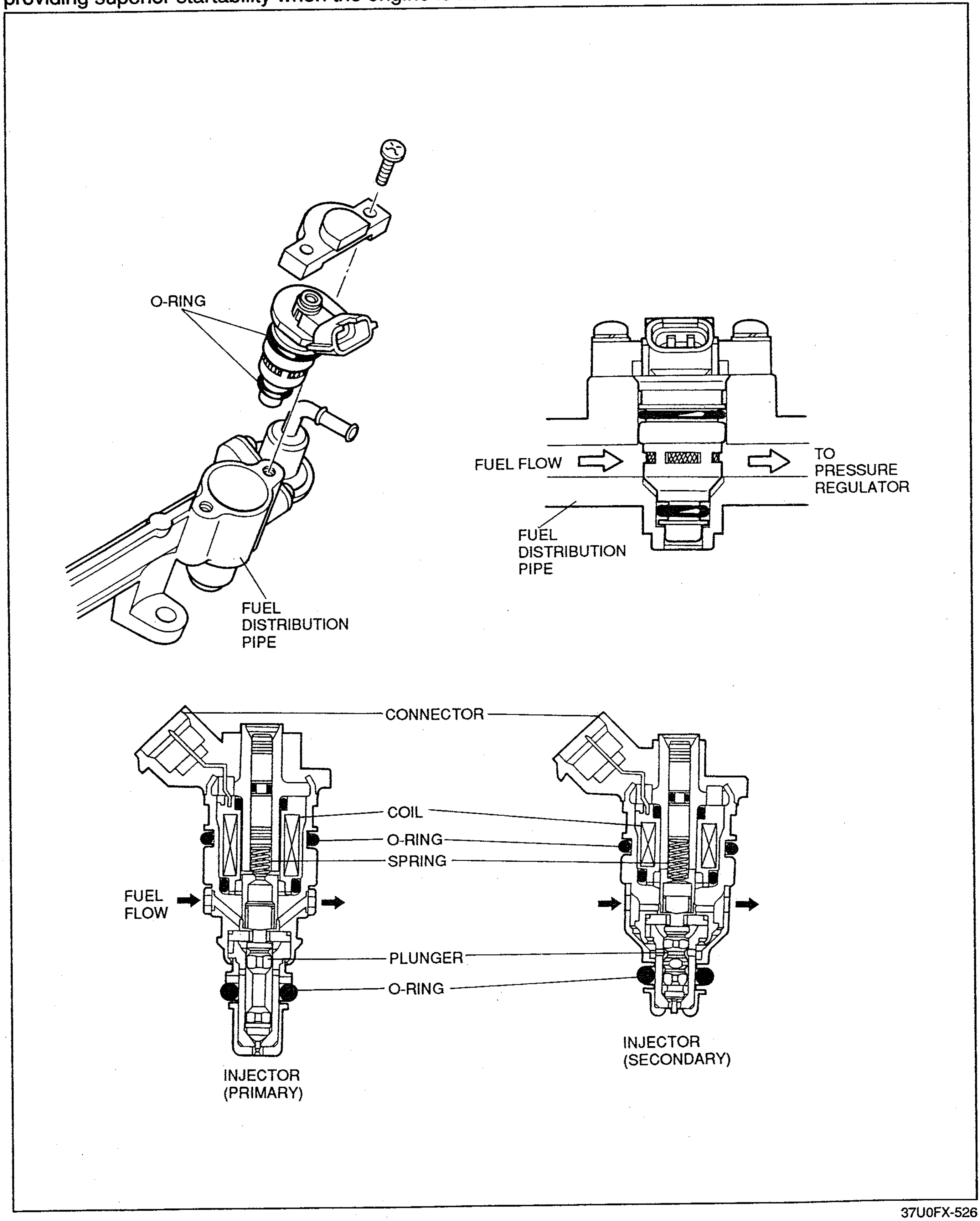

37U0FX-526

Air Bleed Socket

- An air bleed socket is installed below each of the injectors to aid atomization in vaporization of the fuel.
- While the air bleed socket of the secondary injector is used to vaporize fuel, the primary injector air bleed socket with a mixing plate vaporizes the fuel as well as controlling the injection angle. Because of the location of the primary injector in relation to the combustion chamber, the time allowed to mix the fuel in the combustion chamber is short. The air bleed socket design facilitates fuel vaporization and prevents it from sticking to the intake manifold.

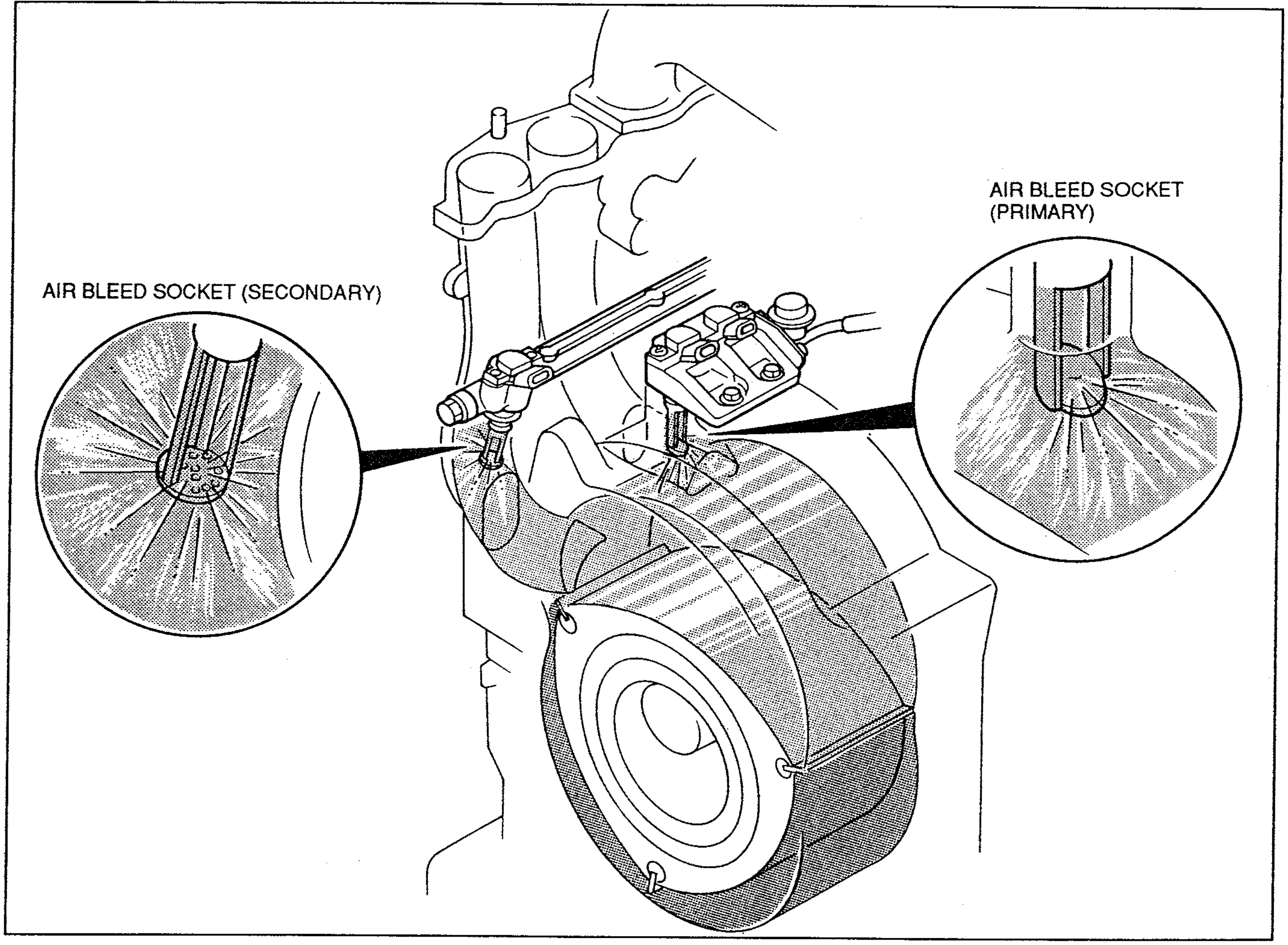

37U0FX-527

FUEL THERMOSENSOR

The fuel thermosensor is installed in the secondary fuel distribution pipe to monitor the fuel temperature for operation of the pressure regulator control (hot start assist) systems.

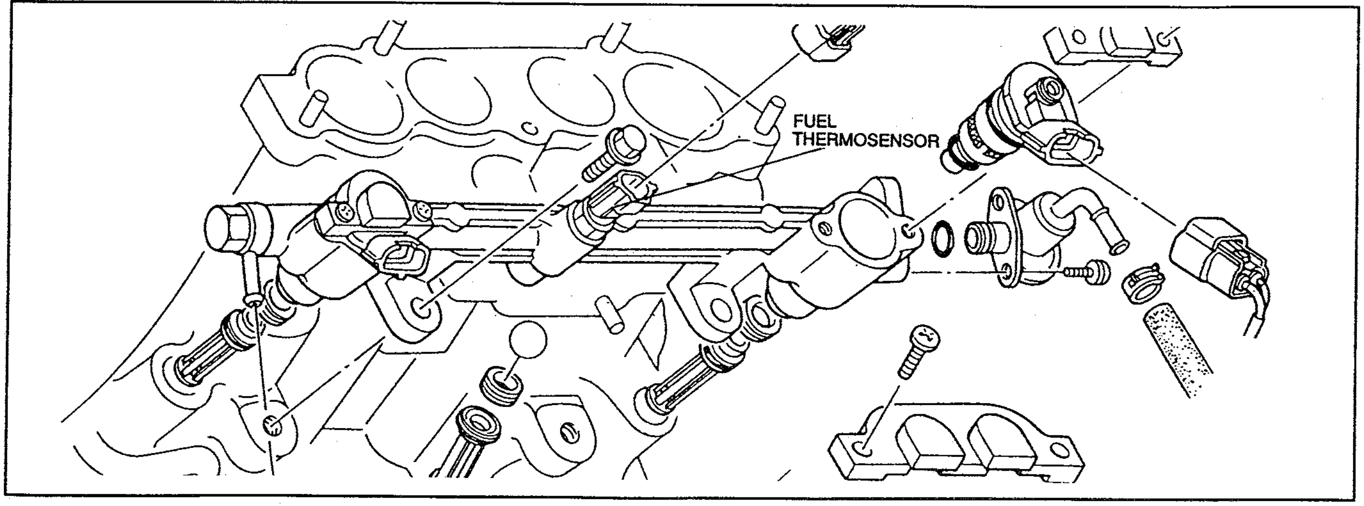

37U0FX-528

FUEL PUMP CONTROL SYSTEM

Outline

- The ECU turns the fuel pump ON/OFF via the circuit opening relay and fuel pump relay. By controlling the fuel pump relay, the ECU also controls fuel pump operation in two phases to improve fuel pump reliability and ensure the necessary fuel amount.

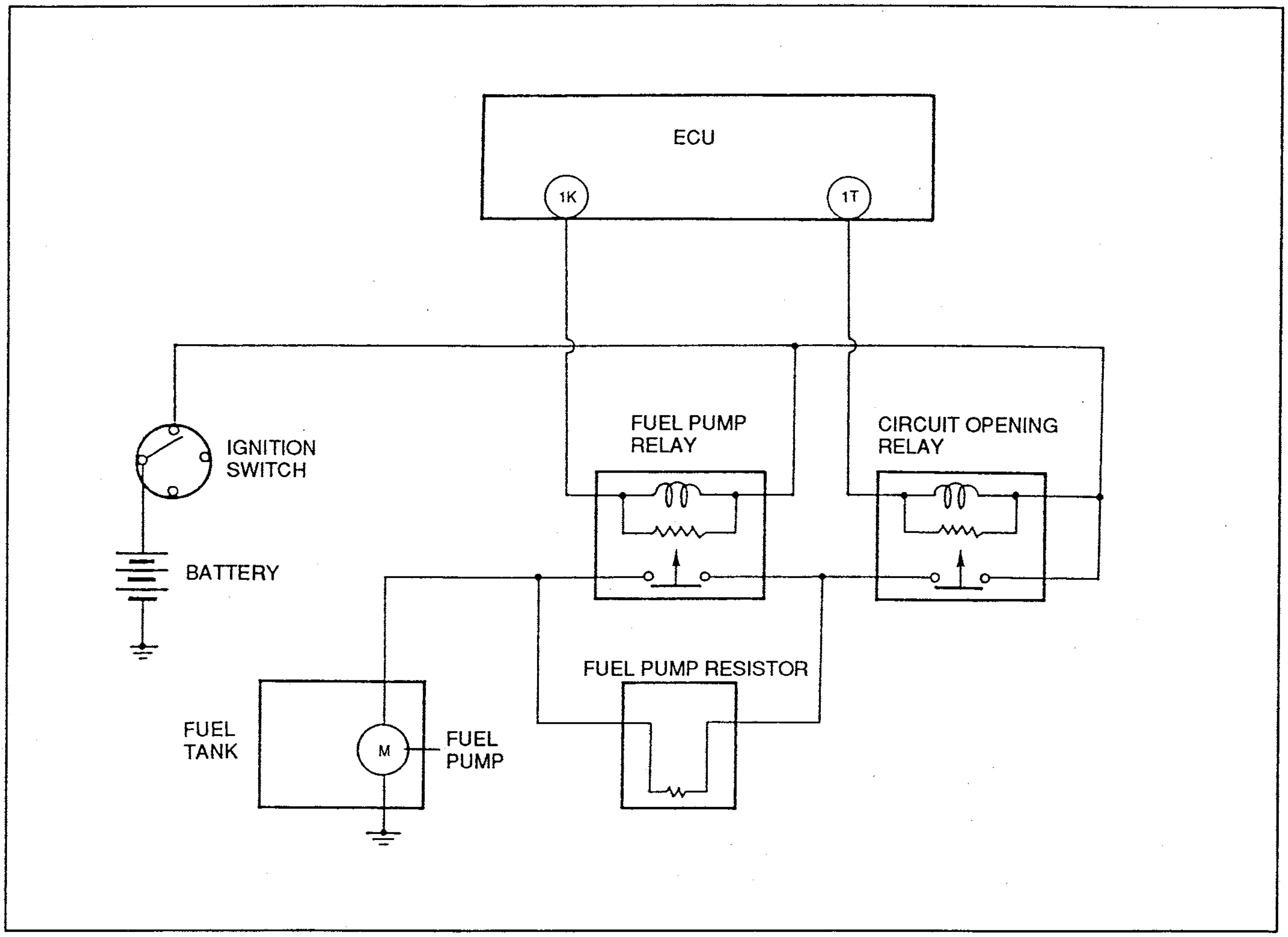

37U0FX-529

Circuit opening relay

- The circuit opening relay is controlled by the ECU and turns the fuel pump ON and OFF.

Fuel pump relay

- The fuel pump relay is controlled by the ECU and controls fuel pump operation voltage via the fuel pump relay.

Fuel pump resistor

- The fuel pump resistor controls fuel pump operation voltage. During low-speed engine operation, fuel pump voltage is supplied via the fuel pump resistor.

Operation

(1) In low-speed range (1K terminal of ECU is battery voltage)
  - The fuel pump is driven by voltage via the fuel pump resister.

(2) In high-speed range (1K terminal of is 0V)
  - The fuel pump is driven by battery voltage.

Operating conditions

The system operates when either of the following conditions is met.

- During engine start-up
- Solenoid valve (pressure regulator control) operating
- High speed and heavy load

PRESSURE REGULATOR CONTROL SYSTEM

Outline

- This system cancels the vacuum applied to the pressure regulator and increases the fuel pressure during hot engine start-up and for a period immediately following start-up. This improves hot starting as well as providing smooth idle.

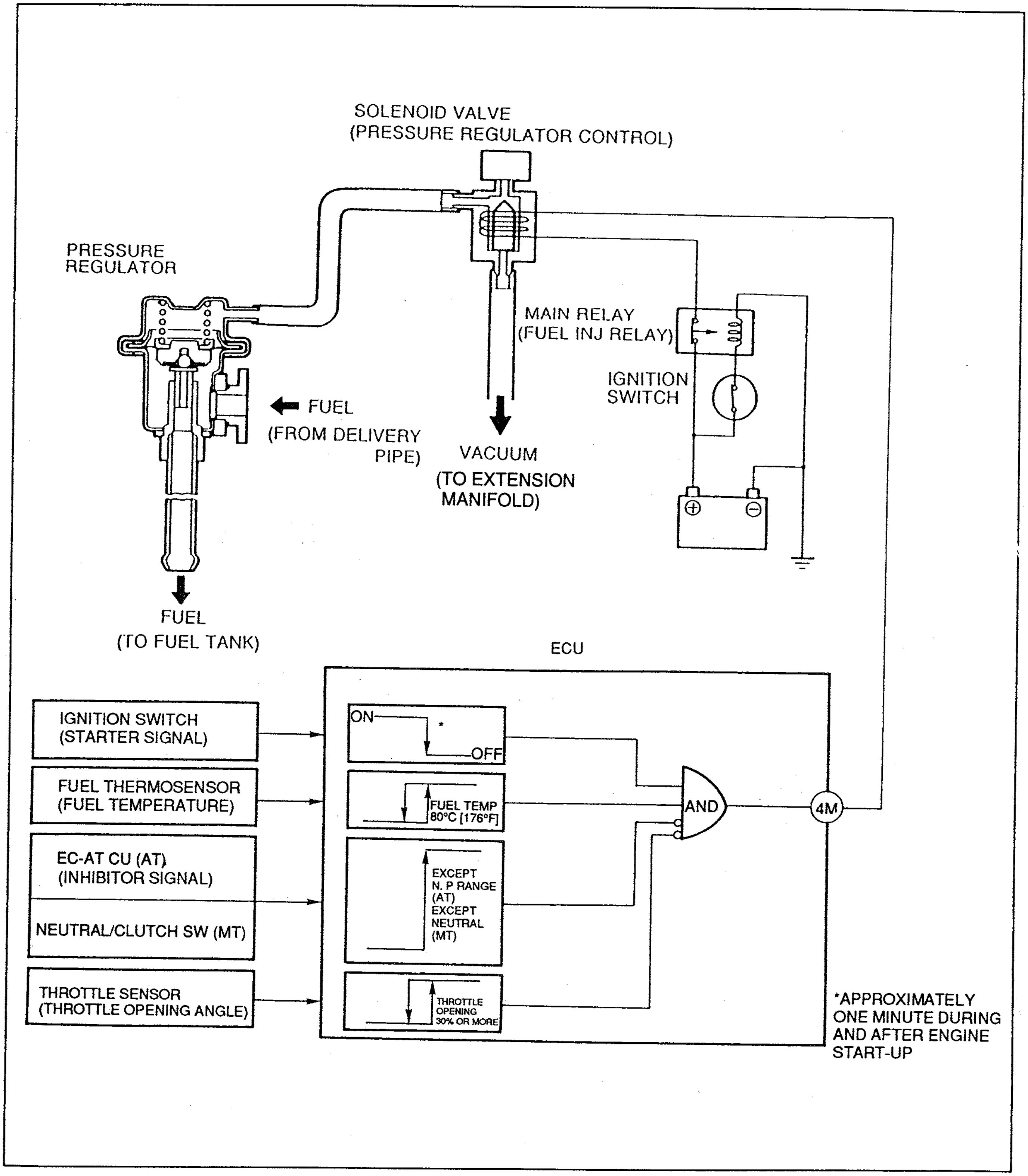

37U0FX-530

Operation

To prevent vapor lock during hot restart idle, vacuum to the pressure regulator is momentarily cut, and fuel injection pressure is increased to slightly more than **284kPa {2.5 kg, cm², 41.2 psi}.**
Pressure in the fuel line at idle is **190—230 kPa {1.9—2.3 kg/cm², 27—33 psi}.**

FUEL INJECTION CONTROL SYSTEM

OUTLINE

This system consists of the input devices (switches and sensors) and the engine control unit (ECU). The ECU detects the engine operating conditions and the vehicle driving conditions, and controls the injection timing and amount to obtain :

1. Excellent throttle response
2. Excellent fuel economy
3. Reduced exhaust emissions
4. Optimum performance and drivability

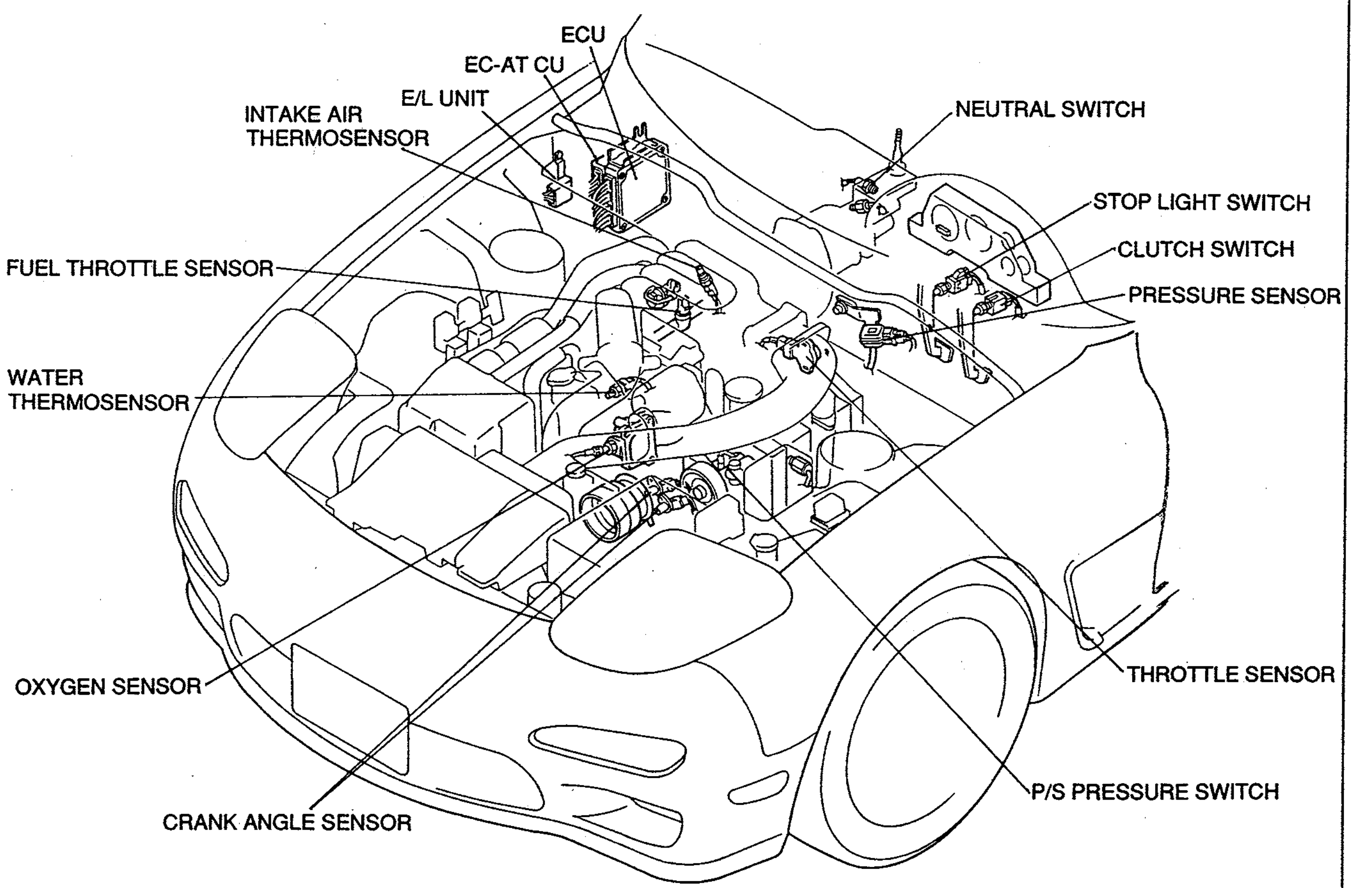

37U0FX-531

CRANK ANGLE SENSOR

- The crank angle sensor is installed near the eccentric shaft pulley. It creates pulley rotation signals and sends this data to the ECU. The crank angle sensor consists of two independent sensors. One sensor is for NE signals, which indicate engine speed and crank angle; the other sensor is for G signals, which indicate the specified crank angle (BTDC 5°).
- Compared with a conventional crank angle sensor, this unit provides more accurate detection because it detects signals directly from the eccentric shaft. It also improves serviceability, because it requires no adjustment for ignition timing.

Operation

1. Creation of NE Signals
   - The eccentric shaft pulley has 12 slots for creation of the NE signals. There are 12 pulses per rotation of the eccentric shaft (every 30 degrees).
2. Creation of G Signals
   - The eccentric shaft pulley is fitted with a pin to initiate the G signals. There is one pulse per rotation of the eccentric shaft (every 360 degrees).

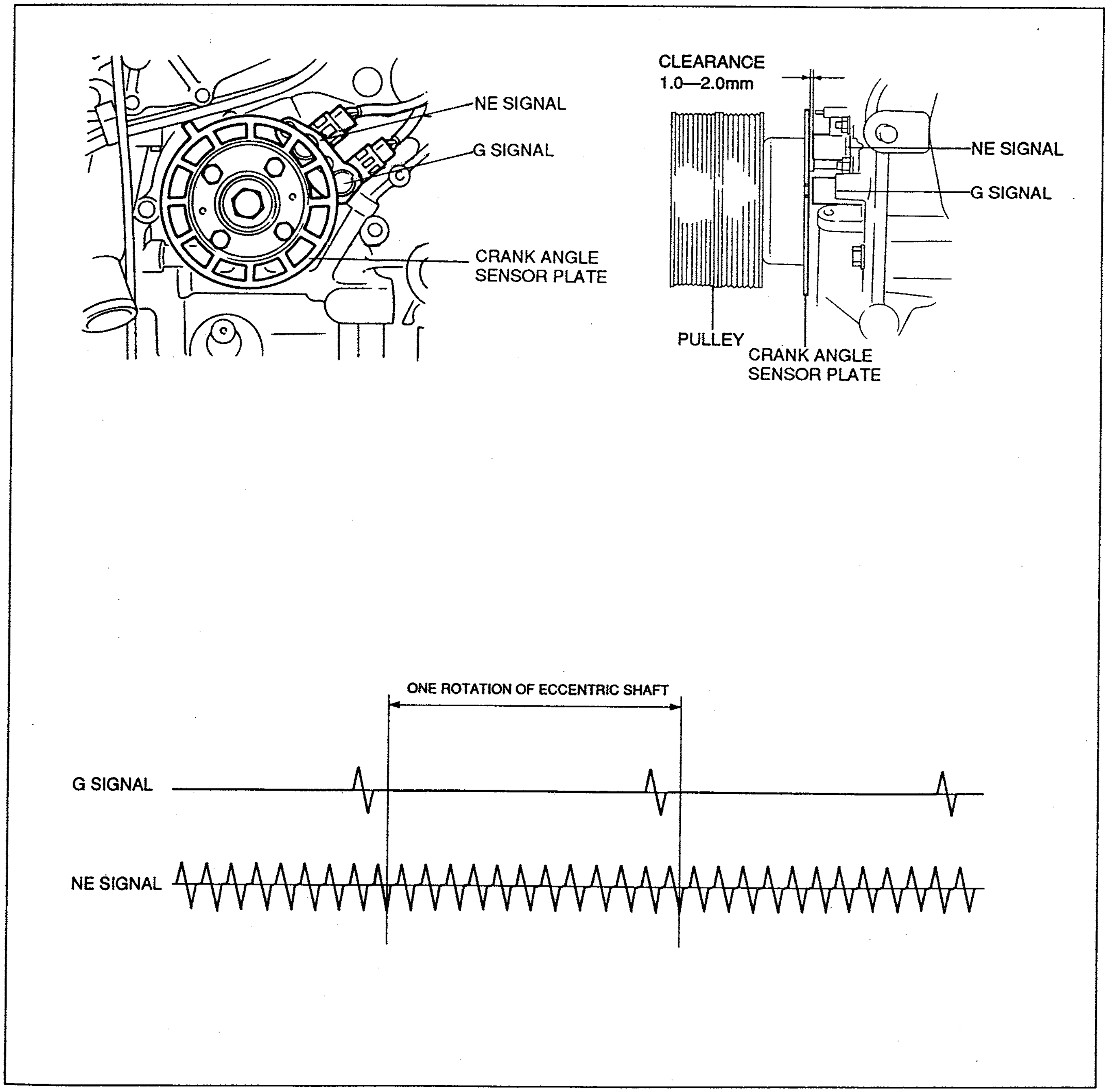

37U0FX-532

FUEL INJECTION TIMING

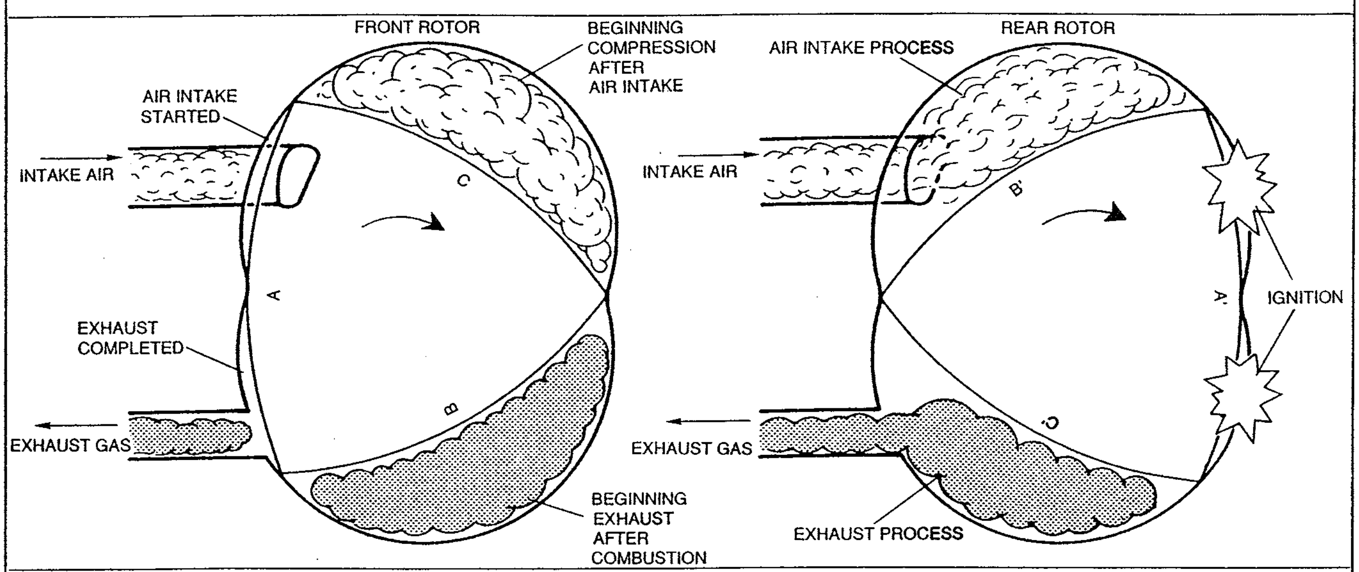

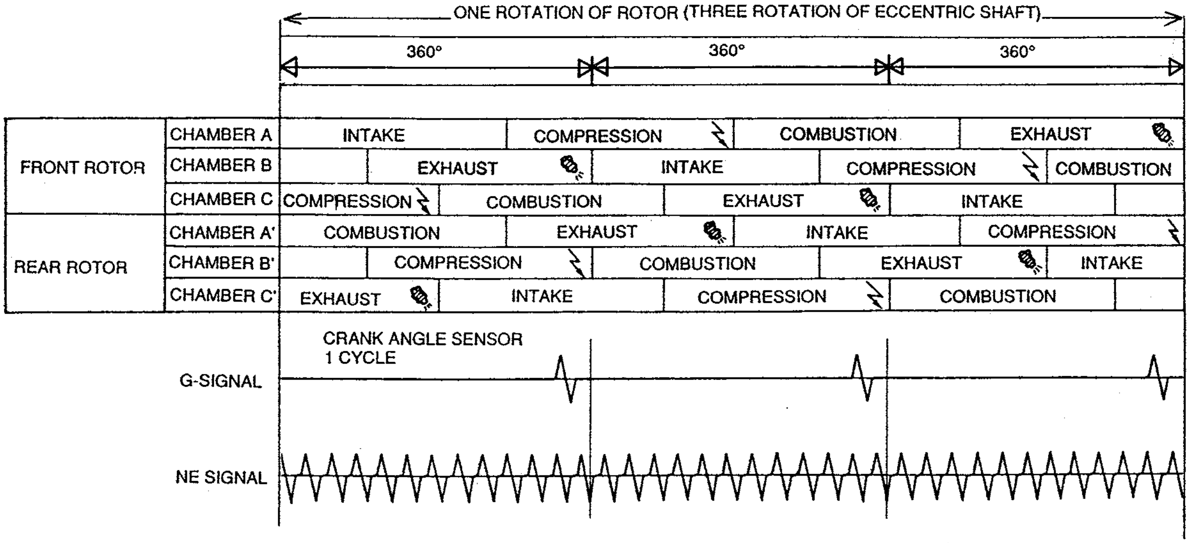

FRONT ROTOR	CHAMBER A	INTAKE	COMPRESSION	COMBUSTION	EXHAUST	
	CHAMBER B		EXHAUST	INTAKE	COMPRESSION	COMBUSTION
	CHAMBER C	COMPRESSION	COMBUSTION	EXHAUST	INTAKE	
REAR ROTOR	CHAMBER A'	COMBUSTION	EXHAUST	INTAKE	COMPRESSION	
	CHAMBER B'		COMPRESSION	COMBUSTION	EXHAUST	INTAKE
	CHAMBER C'	EXHAUST	INTAKE	COMPRESSION	COMBUSTION	

37U0FX-579

Fuel is independently injected to each rotor by giving three injections per one eccentric shaft rotation (three injection per cycle).

FUEL INJECTION AMOUNT

Injection characteristics are basically classified into two groups, “cranking” and “running” (including idle).

Engine Cranking

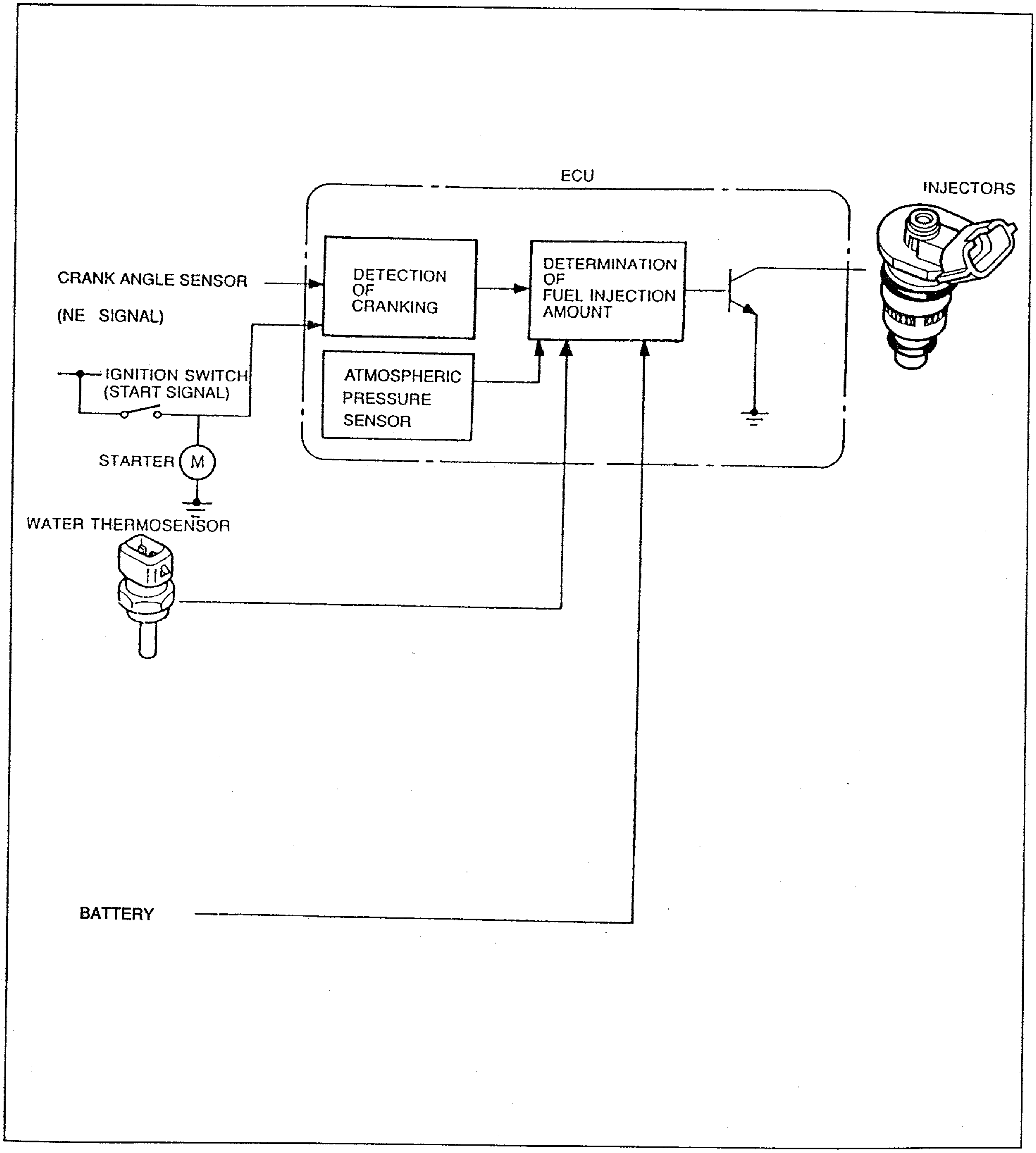

37U0FX-533

The ECU controls the fuel injection amount based on the cranking signal, engine coolant temperature signal, engine speed signal, and atmospheric pressure signal.
When the ignition switch is at the START position and the engine speed is **below 500 rpm**, the ECU judges that the engine is in the cranking condition, and fuel is injected at a preset injection amount according to the engine coolant temperature, atmospheric pressure, and battery voltage.

Engine Running
Basic fuel injection amount

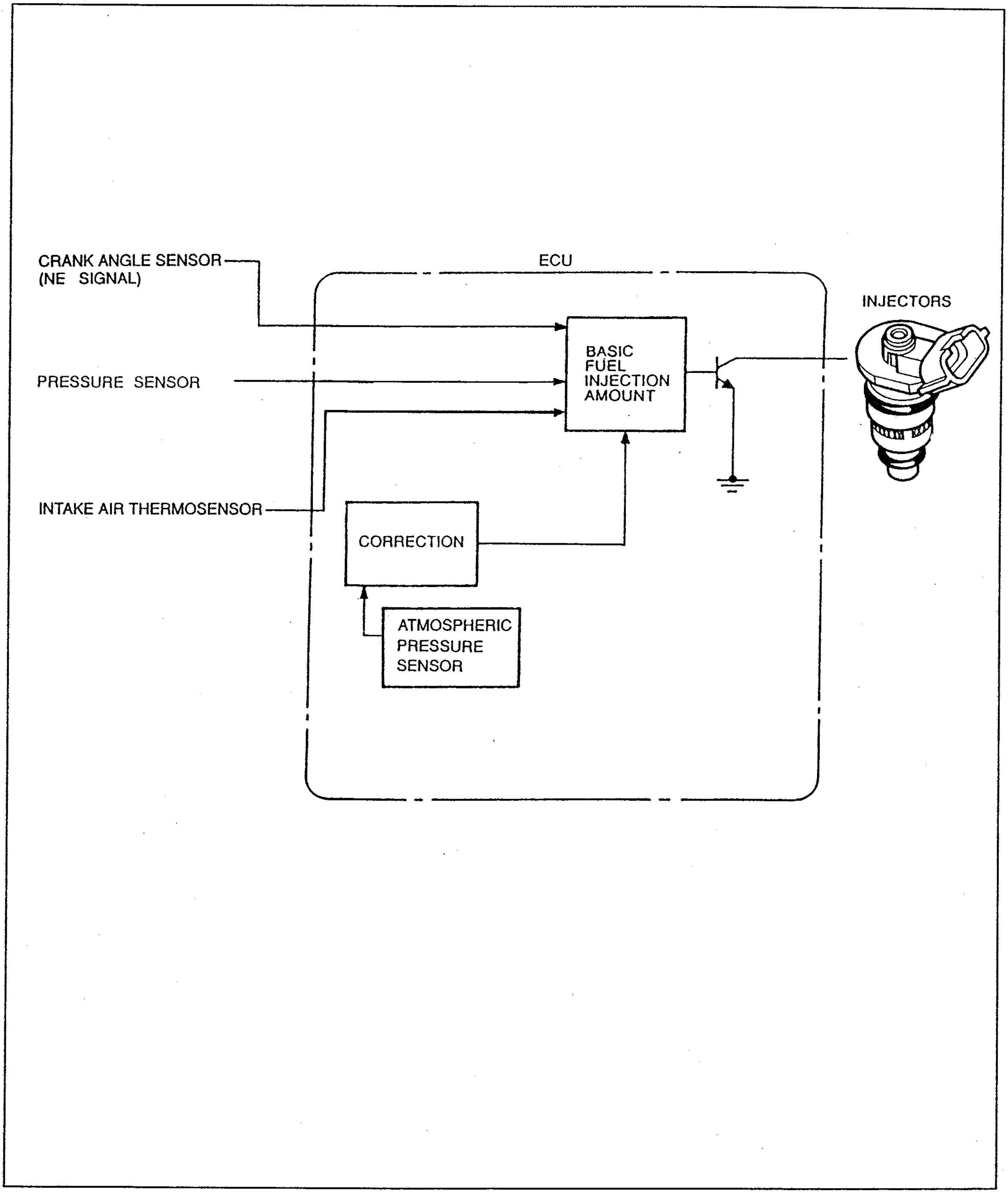

37U0FX-534

The control unit receives electrical signals from the pressure sensor (Intake air amount), crank angle sensor, intake air thermosensor, atmospheric pressure sensor (included in ECU) and calculates how much fuel is required.
The control unit then sends an electrical signal to the injectors of the proper amount of time to supply the correct amount of fuel.

Correction to basic fuel injection amount

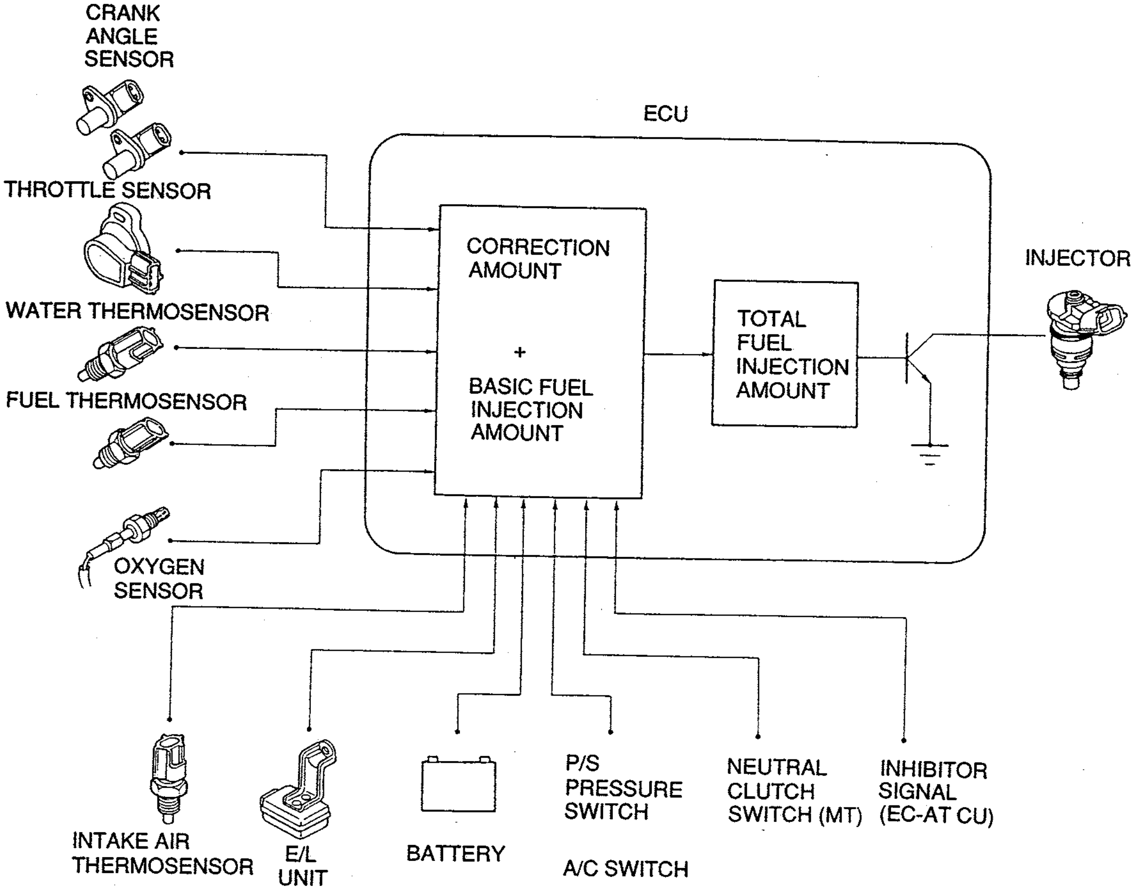

1PE0F2-526

Injection corrections are required to the basic injection amount to provide the amount of fuel that is most suitable for specific engine and driving conditions.

Whether to increase or decrease the fuel injection amount is determined within the ECU by the signals received from the various sensor and switches. The rate at which the air/fuel ratio is changed is preset in the ECU.

Fuel Cut Control

A) Engine overspeed fuel-cut

To prevent engine overspeeding and possible engine damage, the fuel supply is momentarily cut if the engine speed exceeds **8,100 rpm (MT) and 7,500 rpm (AT).**

B) Deceleration fuel-cut

To improve fuel economy during engine high-speed deceleration, the fuel supply is stopped based on signals from the various sensors and switches.
During half-throttle deceleration, fuel injection to only the front rotor is stopped to decrease deceleration shock.

Throttle	Fuel cut	MT		AT	
		Cut speed (rpm)	**Recovery speed (rpm)**	**Cut speed (rpm)**	**Recovery speed (rpm)**
Fully closed	Front rotor	1,200	1,000	1,500	1,050
	Rear rotor	1,750	1,500	1,600	1,400
Half-throttle	Front rotor	1,200	1,000	1,500	1,050

C) Overboost fuel-cut

To protect the engine, fuel injection to the rear rotor is stopped when the turbocharger boost pressure exceeds approximately **182.5 kPa {1,370 mmHg, 53.9 inHg}.**

D) Dechoke

To facilitate starting the engine if the spark plugs become fouled, such as when the engine is flooded, fuel injection is stopped if the throttle valve is held wide open while cranking. This allows the spark plugs to dry and purges excess fuel from the rotor housing.

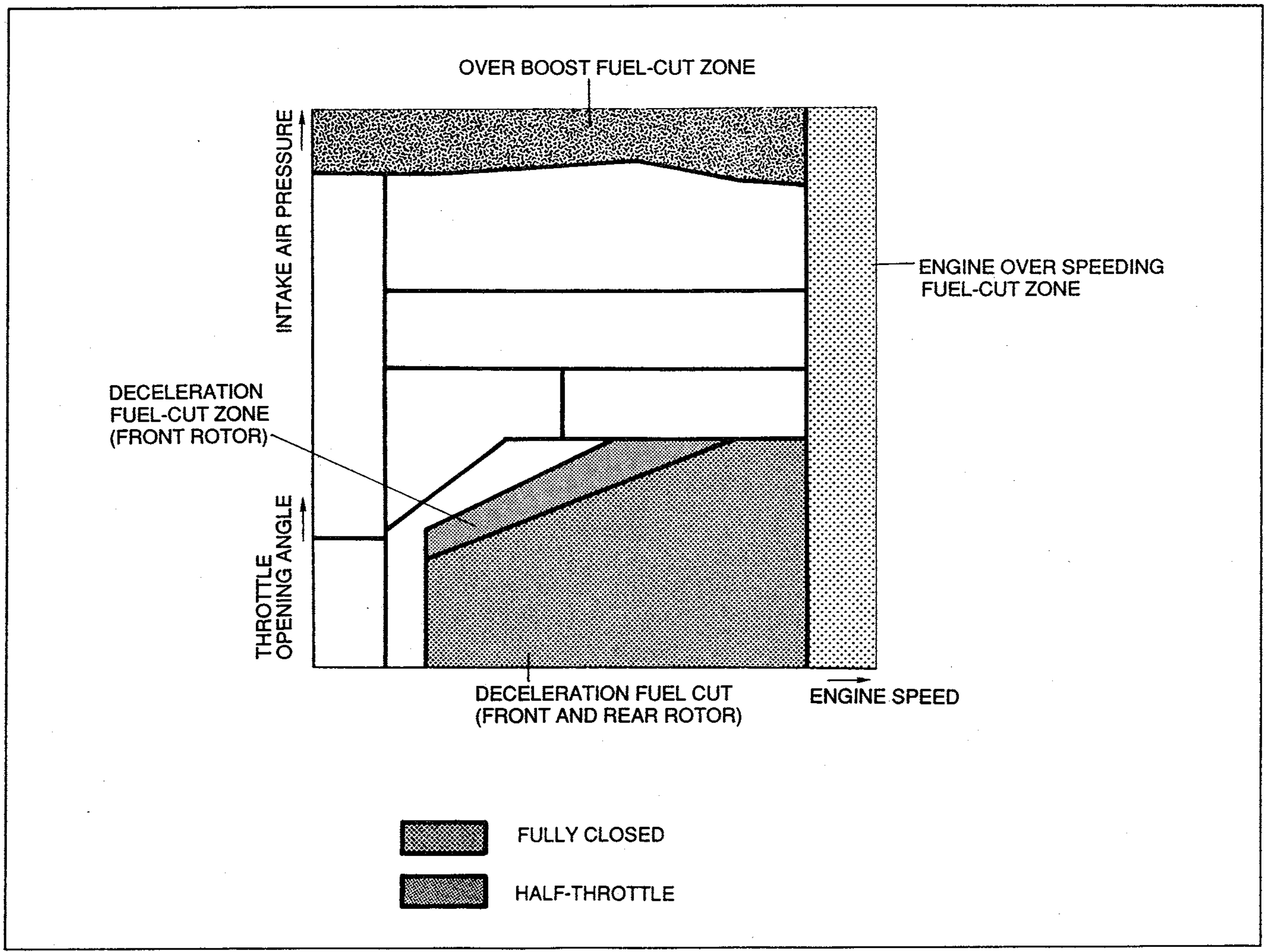

37U0FX-535

Zone Correction

- To maintain the most desirable air/fuel ratio throughout the entire driving range, the driving range is divided into several zones based on engine speed, intake manifold pressure, and throttle opening angle. Appropriate corrections are made in each zone.

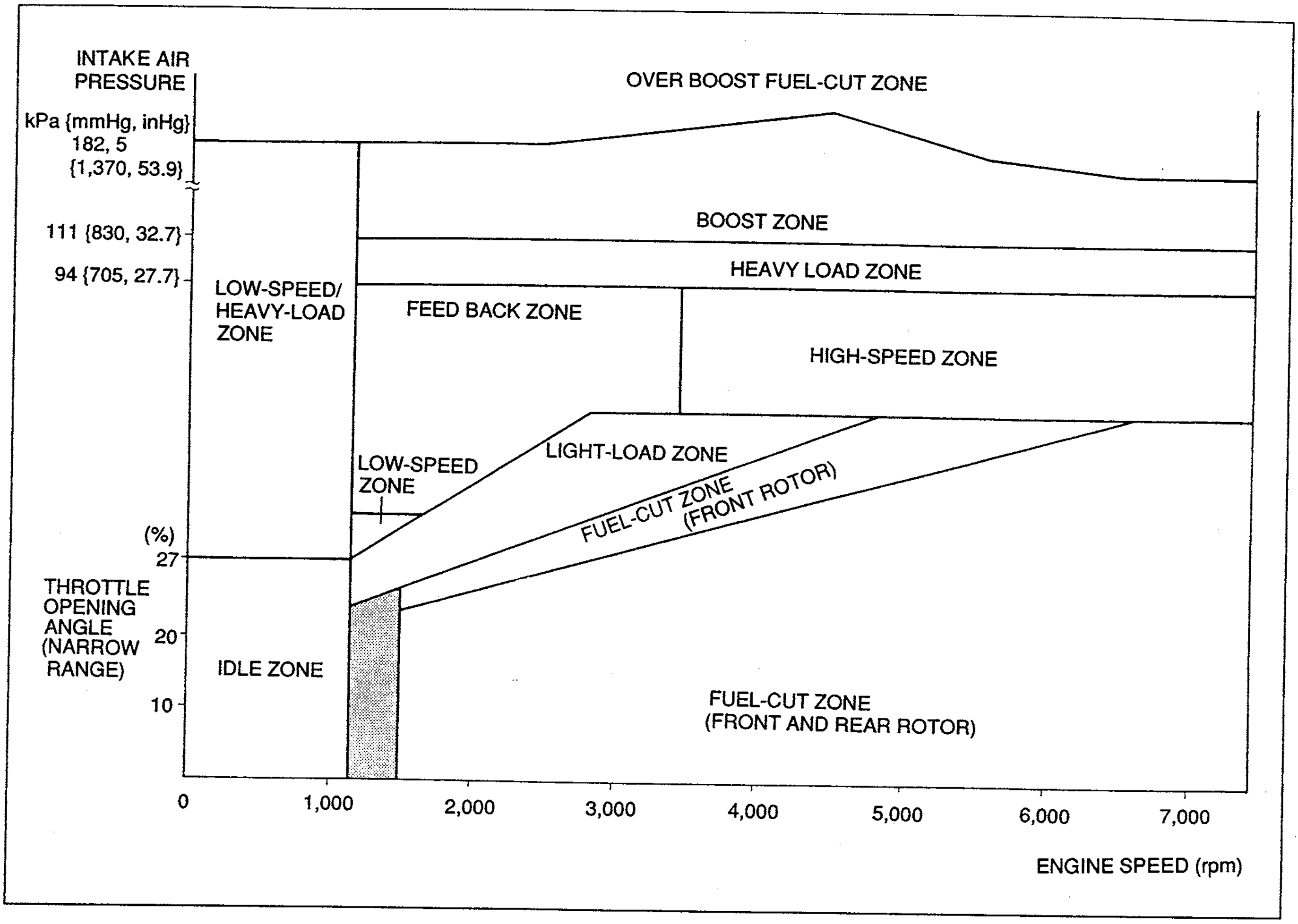

37U0FX-536

Fuel	Zone	Operation	Remark
Decrease	Fuel-cut (F&R rotor)	Fuel supply is stopped during full-closed throttle deceleration	Improves drive feeling and fuel efficiency
	Fuel-cut (Front rotor)	Fuel to front rotor is cut during half-throttle deceleration	Prevents bucking
Increase	Light-load	Fuel amount is increased	Ensures engine smoothness
	Low-speed		
	Low-speed/ Heavy-load		
	High-speed		
	Heavy-load		
	Boost		
	Idle	Fuel amount is increased corresponding to the applied load	
Feedback	Feedback	During constant-speed driving, feed back control is performed based on oxygen sensor signals	Improves exhaust gas cleansing

LEAN BEST IDLE CONTROL SYSTEM

For reduced fuel consumption and reduced exhaust emissions at idle, the lean best idle control system is employed. With this system, the engine control unit sets fuel injection at idle to the leanest amount possible without causing lean misfire and rough idle.

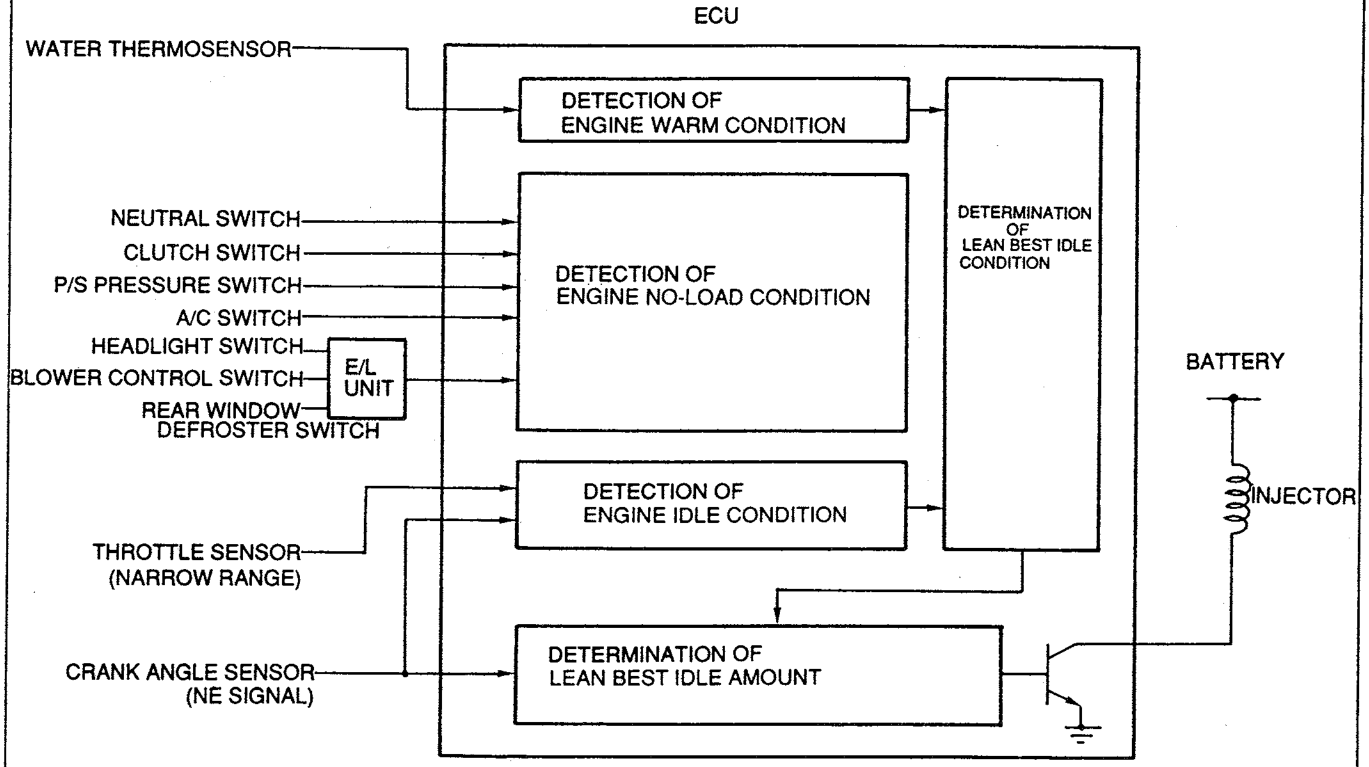

37U0FX-537

ELECTRONIC SPARK ADVANCE (ESA) CONTROL SYSTEM

OUTLINE

- The ignition system uses an electronic distribution system in which the ECU controls the igniters based on signals from the crank angle sensor and pressure sensor, and distributes current directly to spark plugs from the ignition coils.
- The ignition timing control is an electronic spark advance (ESA) system that determines the most desirable ignition timing by adding various corrections to match the engine speed and intake air pressure.

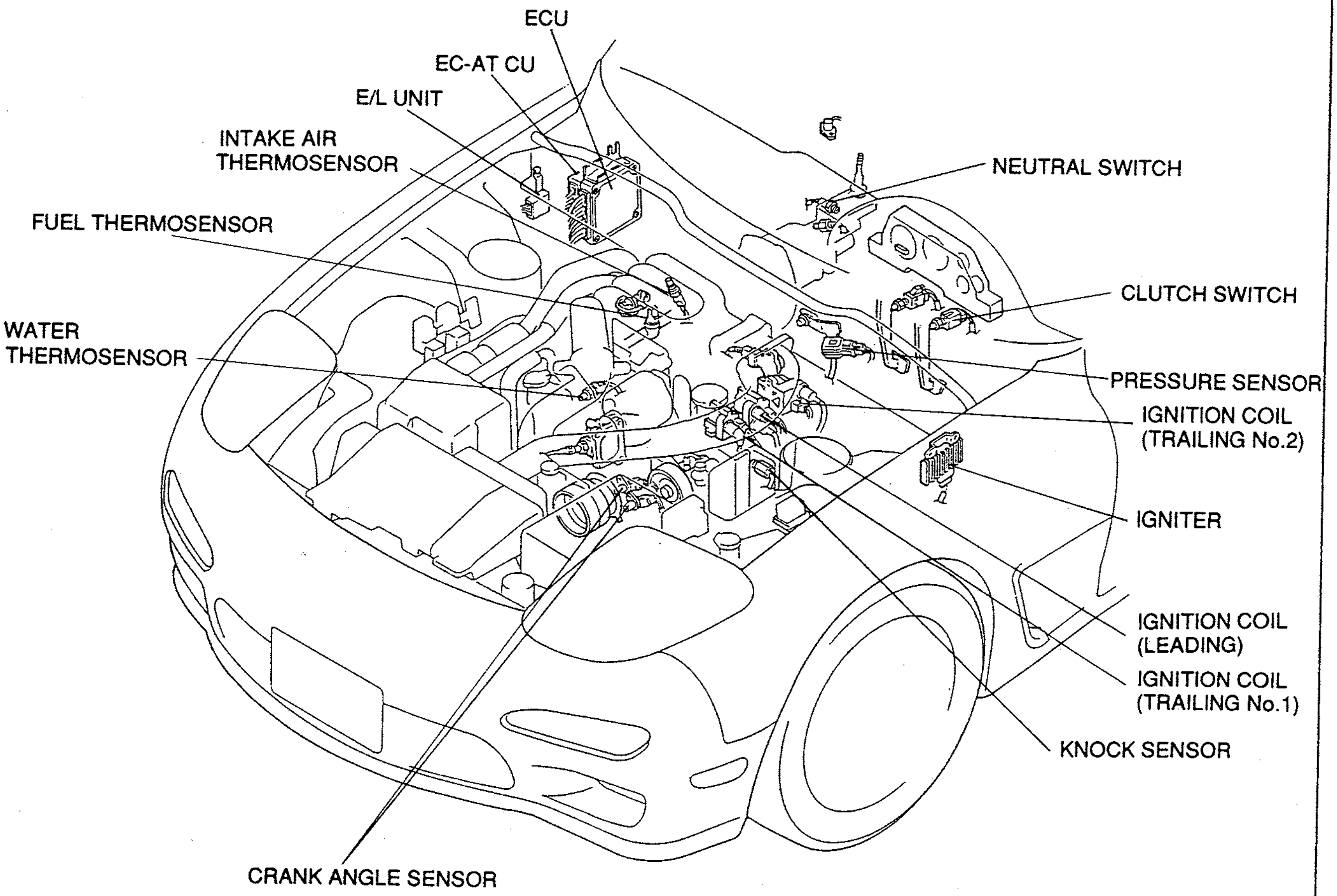

37U0FX-538

CONTROL SYSTEM

Standard Ignition Timing Control

- In contrast to fixed ignition timing control, standard ignition timing control is determined by adding various corrections to the basic ignition timing.
- Standard ignition timing is obtained by the following calculation:
  Standard ignition timing = Basic ignition timing – Coolant temperature correction – Intake air temperature correction – Acceleration correction –
  Light-load zone correction – Regular gasoline correction – Knocking correction

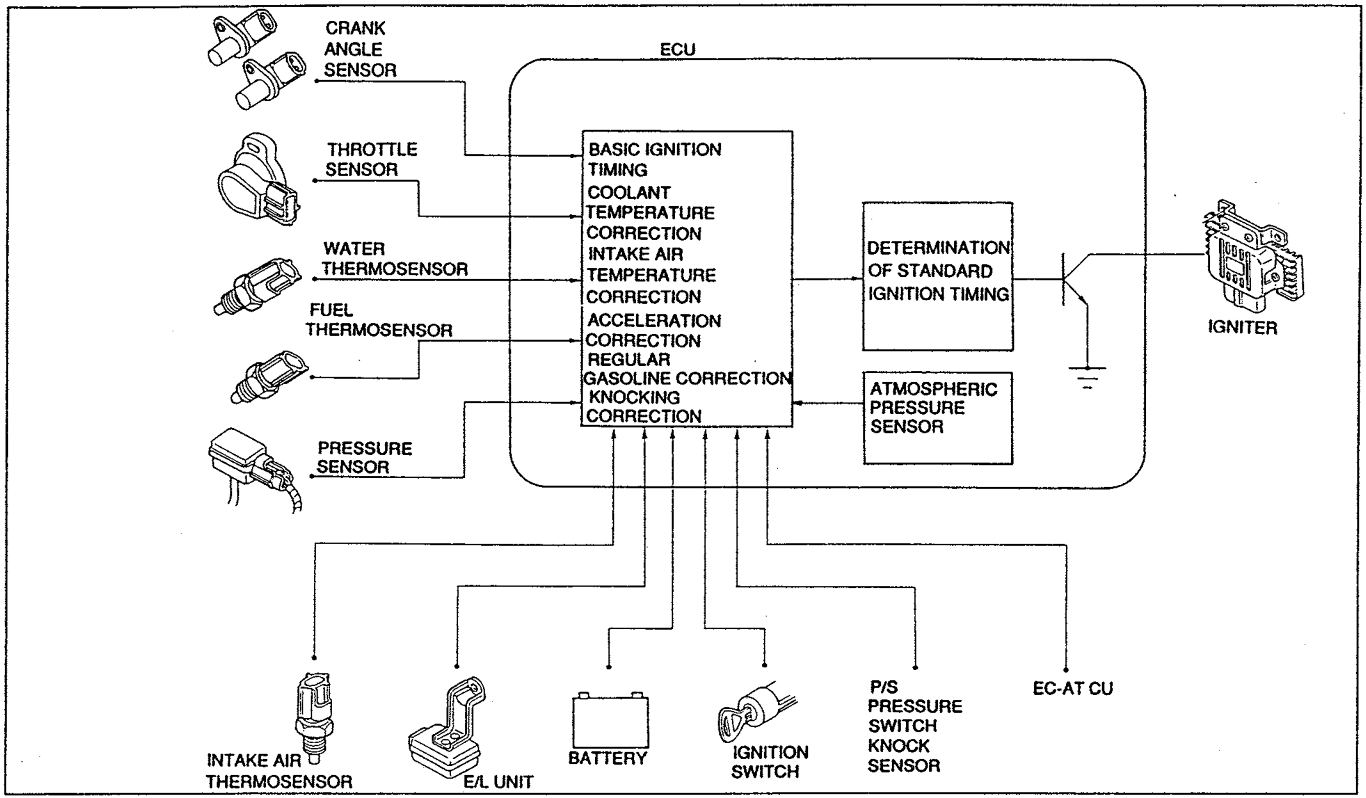

37U0FX-539

(1) Basic Ignition Timing
- Basic ignition timing forms the basis of ignition timing control and is determined by engine speed and intake air pressure.

(2) Coolant Temperature Correction, Intake Air Temperature Correction
- To prevent knocking, retard corrections are made based on preset engine speed, intake air pressure, and coolant temperature parameters.
  (Water temperature: high, Retard amount: large)

(3) Acceleration Correction
- During acceleration after fuel cut, retard corrections are made based on the engine speed to prevent knocking.

(4) Light-Load Zone Correction
- To stabilize engine combustion, retard corrections are made in the light-load zone based on engine speed to prevent car bucking.

(5) Regular Gasoline Correction
- When regular (low octane) fuel is used, retard corrections are made based on engine speed and intake air pressure to prevent knocking.

(6) Knocking Correction
- When knocking occurs with the fuel injection amount exceeding a preset level, gradual retard corrections (maximum 7°) are made to protect the engine. After knocking is solved, the ignition timing gradually returns to that as before knocking.

Fixed Ignition Timing Control

- Fixed ignition timing control is applied when standard ignition timing control cannot be achieved, such as during engine start-up or fail-safe operation, or when fixed ignition timing is considered to improve drivability and reliability.
  Fixed ignition timing control is separated into the following six cases:

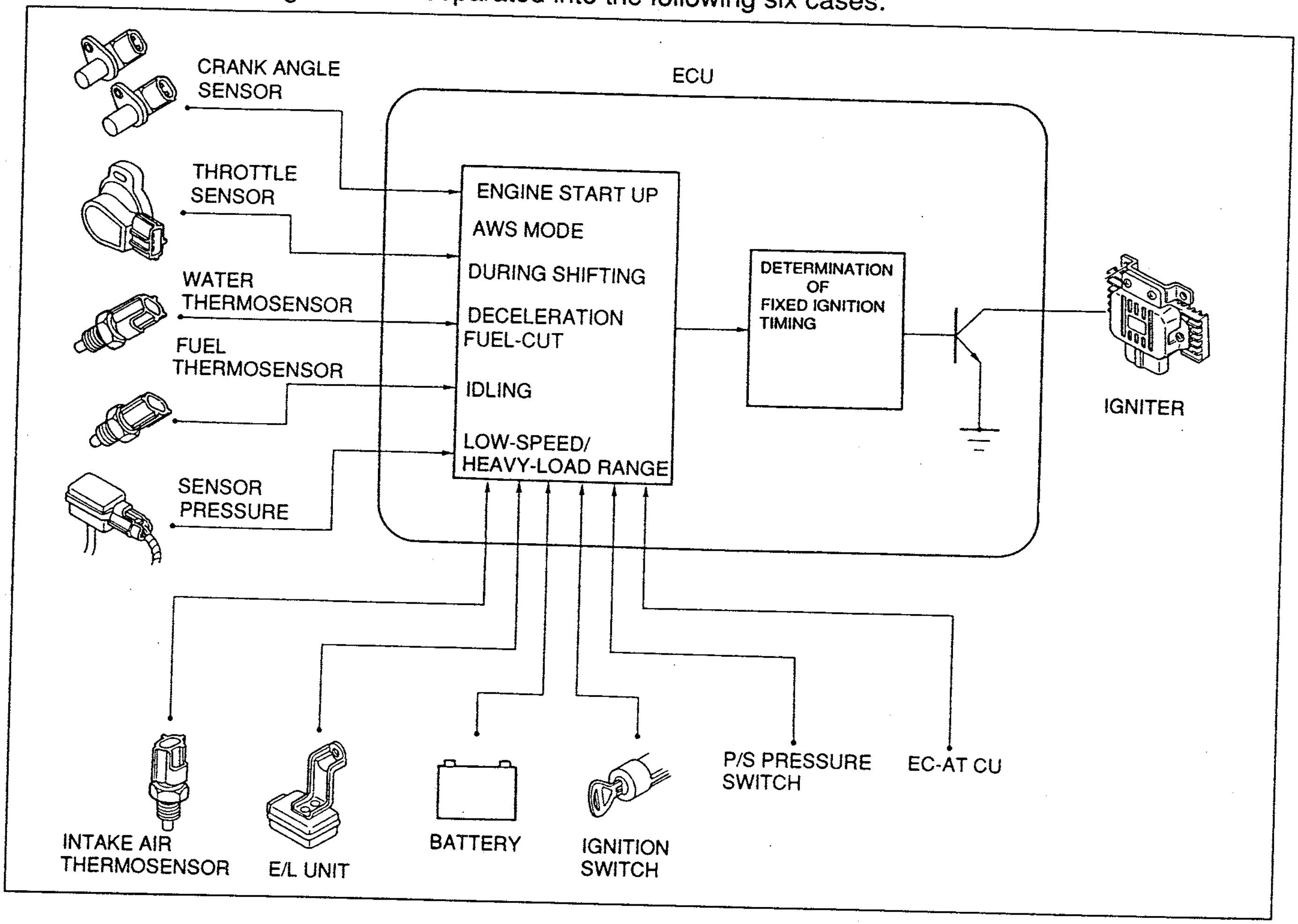

37U0FX-540

(1) Fixed Ignition during Engine Start-up
- Ignition timing is fixed during engine start-up because accurate calculation of ignition timing is difficult due to battery voltage drop and engine speed fluctuation (L, T: 5° BTDC).

(2) Fixed Ignition Mode
- Ignition timing is fixed for a specified time to stabilize engine speed during and after engine start-up when the coolant temperature is low.

(3) Fixed Ignition during Shifting (AT)
- During upshifting with a coolant temperature of at least 40°C (104°F), ignition timing on the leading side is fixed slightly retarded to decrease shift shock.

(4) Fixed Ignition during Deceleration Fuel-Cut
- Ignition timing is fixed at a retarded angle during deceleration fuel-cut to decrease the shock that occurs at fuel injection recovery.

(5) Fixed Ignition during Idling
- To maintain a constant idle speed, ignition timing is fixed corresponding to various loads (mechanical load, electrical load).

(6) Fixed Ignition in Low-Speed, Heavy-Load Range
- In the low-speed, heavy-load range, ignition timing is fixed to protect the catalytic converter from overheating and to maintain drivability.

KNOCK CONTROL SYSTEM

This system retards the ignition timing when engine knocking occurs due to engine lugging when using low octane fuel, etc.

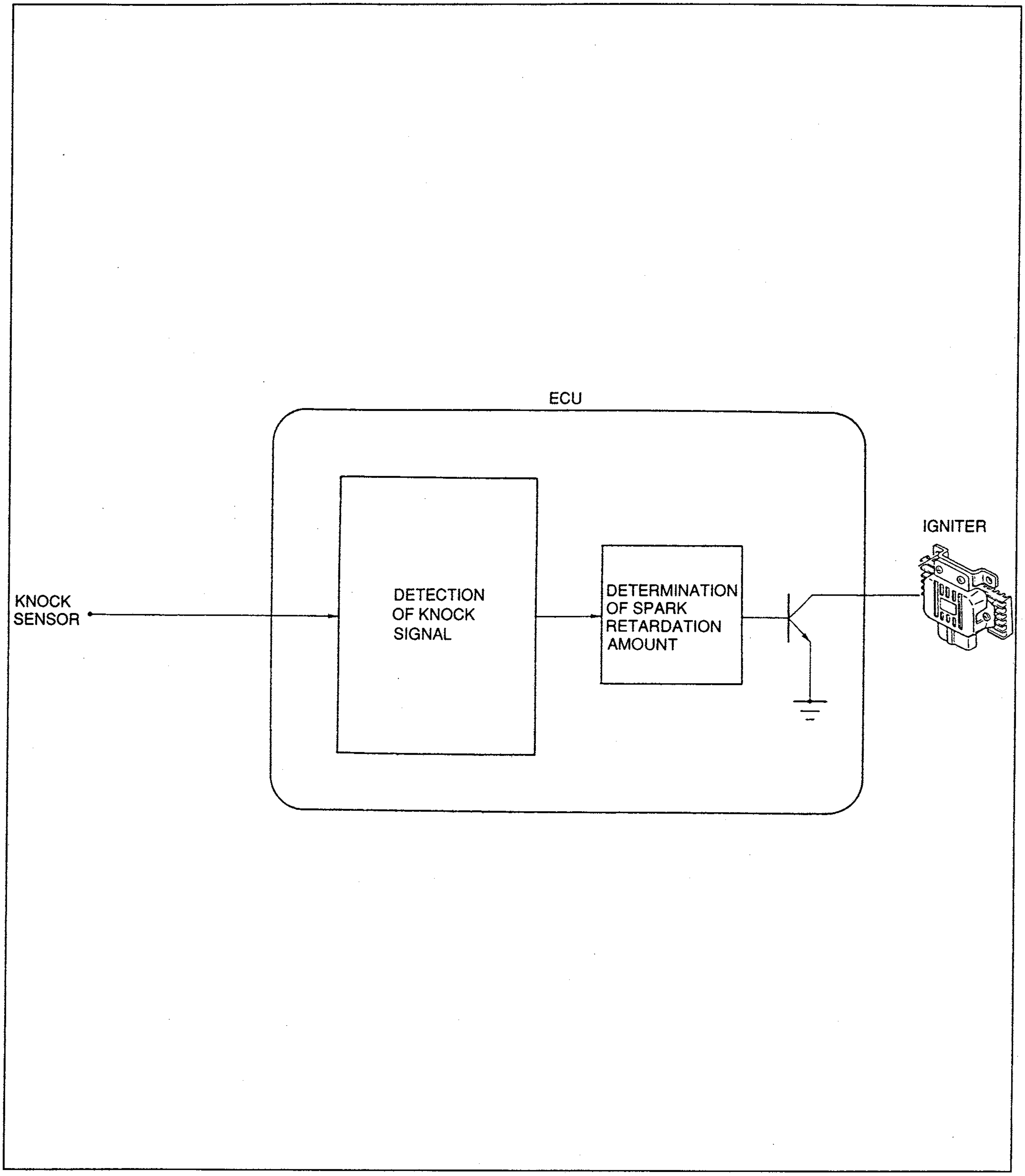

37U0FX-541

Operation

This knock sensor is installed on the front rotor housing. When the housing vibrates, voltage is generated and a signal is sent to the ECU.

The ECU determines whether the signal from the knock sensor is a knocking signal or some other signal. If it is a knocking signal, the ignition timing is retarded according to the intensity of the knock, to a maximum of **7 degree**.

IDLE-SPEED CONTROL (ISC) SYSTEM

OUTLINE

The idle-speed control (ISC) system controls the bypass air amount that passes through the throttle body to improve startability, quicken warm-up times, improve idle and provide better drivability.
The ISC system also takes the place of a conventional dashpot to control deceleration.
The ISC valve employs a linear solenoid valve that is controlled by **244 Hz** constant-frequency duty signals. As the ON time of this signal increases, the internal valve opens, increasing the bypass air amount. As the ON time of the signal becomes shorter, the internal valve closes, reducing the bypass air amount.

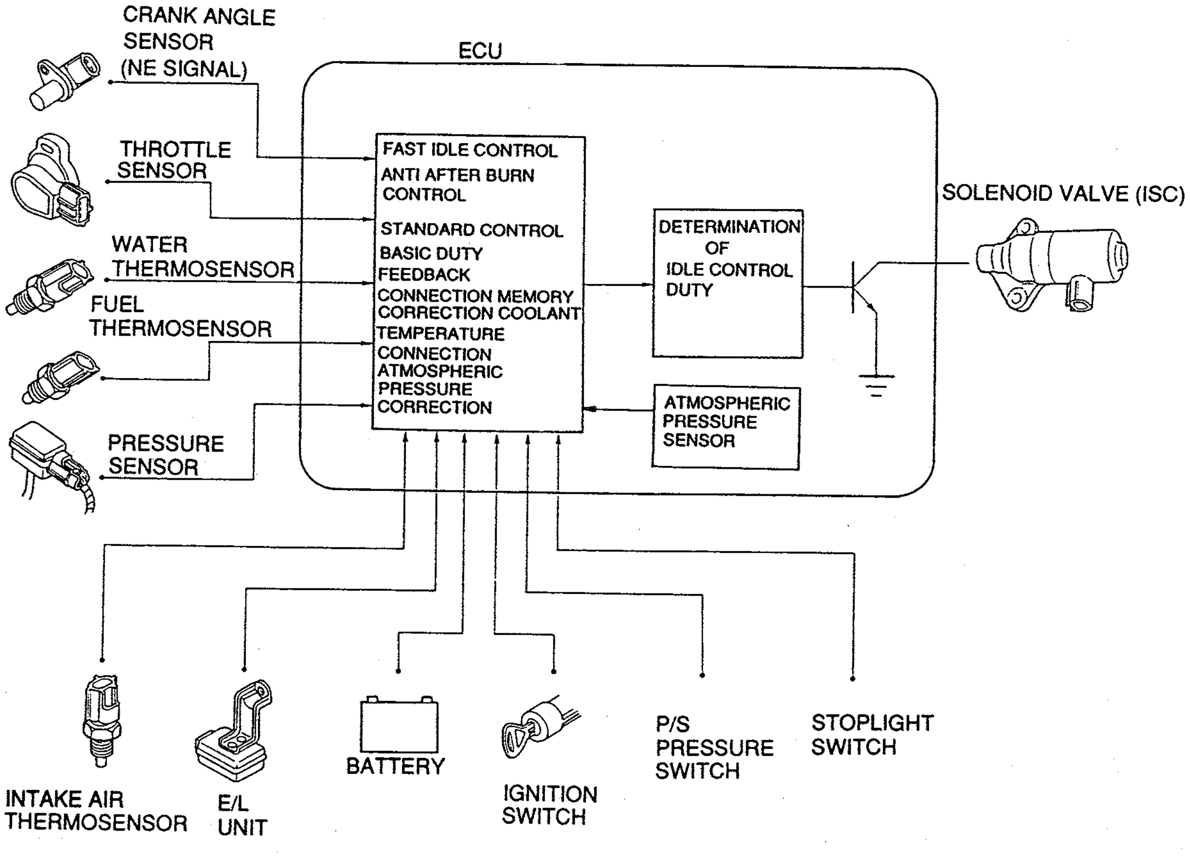

37U0FX-543

CONTROL SYSTEM

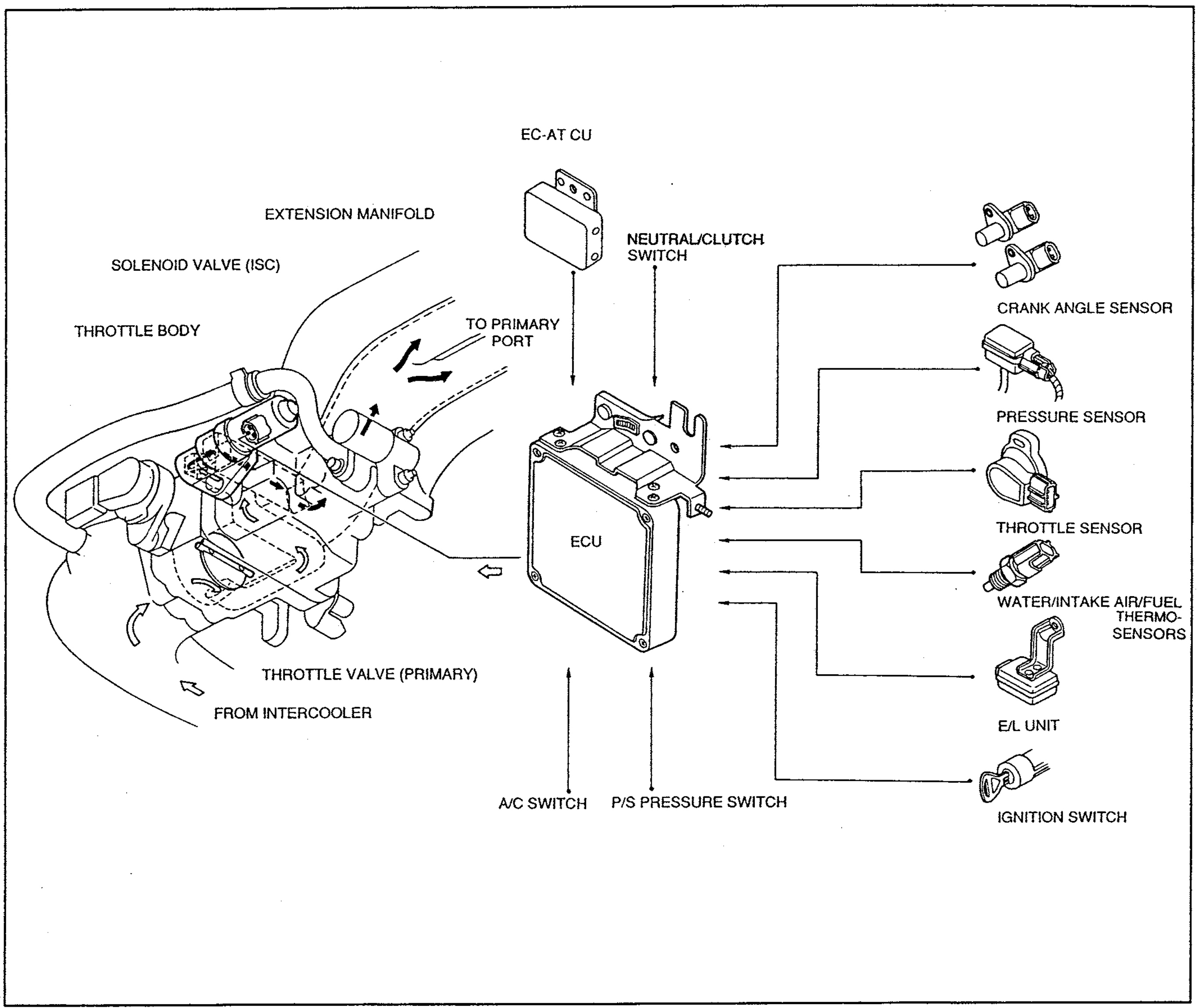

37U0FX-580

The control system consists of the input devices (switches and sensors) and the engine control unit (ECU). The ECU contains preset values for the basic air amount that correspond to the engine's operating conditions.
It also contains the corrections to the basic bypass air amount for engine warm up and for when A/C or other loads are applied.

Engine Speed Feedback System

In order to achieve the target idle speed and idle smoothness, an engine-speed feedback control takes place within the ECU. The basic bypass air amount is increased or decreased to adjust the engine speed to the target idle speed.
The target idle speeds are as follows.

Engine condition		Target idle speed
During warm up		Set according to coolant temperature
After warm up	E/L or P/S : ON	775—825 rpm
	A/C ON	MT 875—925 rpm, AT 775—825 rpm

Note

- **The TEN terminal of the diagnosis connector must be grounded to cancel the feedback control when adjusting the base idle speed.**

ACCELERATED WARM-UP SYSTEM

OUTLINE

To improve warm-up just after starting the engine, the accelerated warm-up system is used.

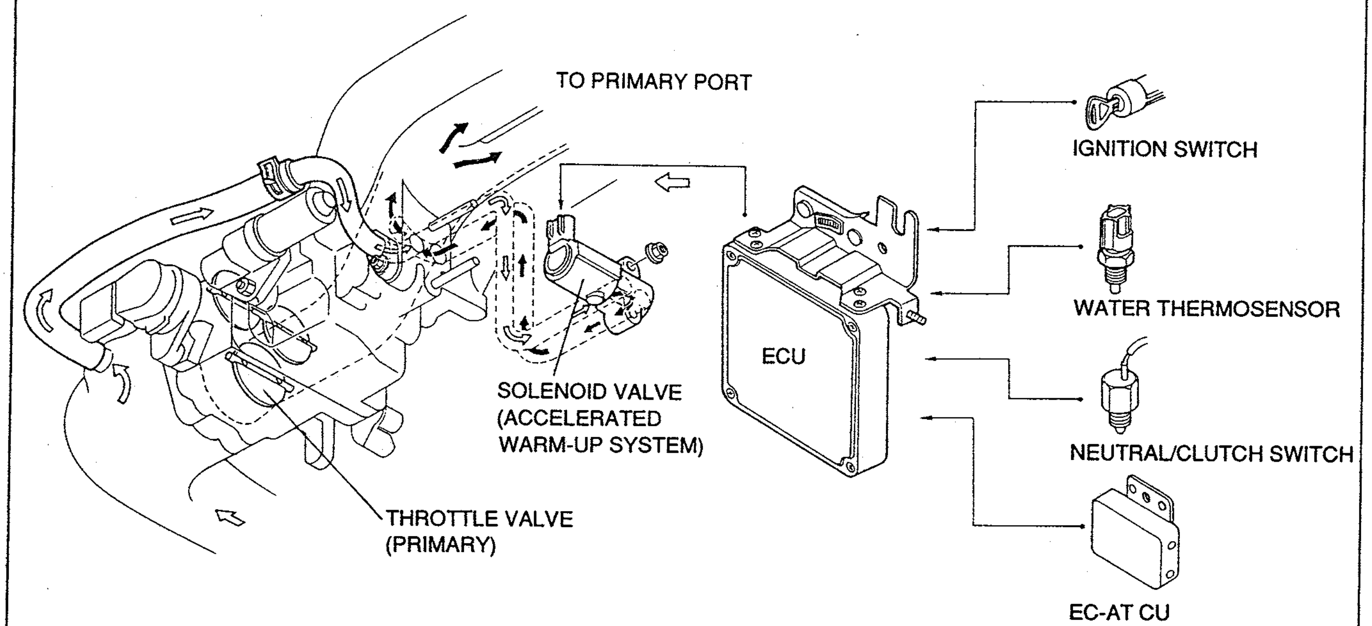

37U0FX-544

Operation

Engine coolant temperature: approximately below 40°C {104°F}

- No signal is sent to the valve from the ECU, the valve is held closed by spring force. As a result, no bypass air is sent to the extension manifold.

Engine coolant temperature: approximately above 40°C {104°F}

- An ON signal is sent to the valve from the ECU, the shaft is pulled by an electromagnetic force generated around the solenoid coil, and the valve is opened. As a result, bypass air is then sent to the extension manifold.

DOUBLE THROTTLE CONTROL SYSTEM

OUTLINE

- The response delay of the pressure sensor to follow rapid acceleration temporarily causes a lean fuel mixture. The double throttle control system prevents hesitation caused by this lean fuel mixture by slightly delaying the opening of the double throttle valve plate mounted downstream of the secondary throttle valve.
- The double throttle valve is controlled by the ECU through the solenoid valve.

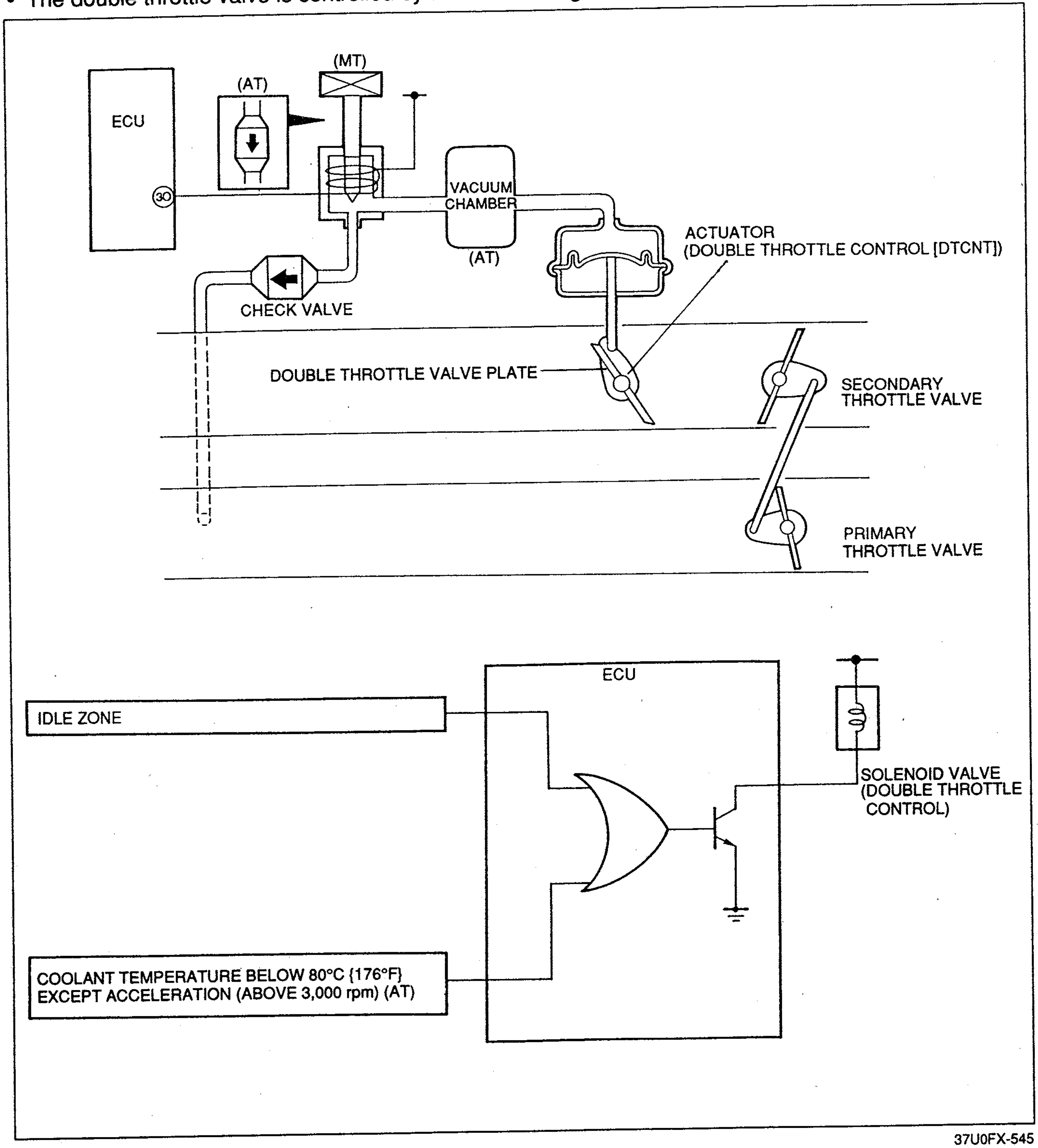

37U0FX-545

Operation

- When one or more of the above conditions are met, the ECU turns the solenoid valve ON, applies vacuum to the double throttle control actuator, and temporarily closes the double throttle valve.

OUTLINE OF EMISSION CONTROL SYSTEM

DESCRIPTION

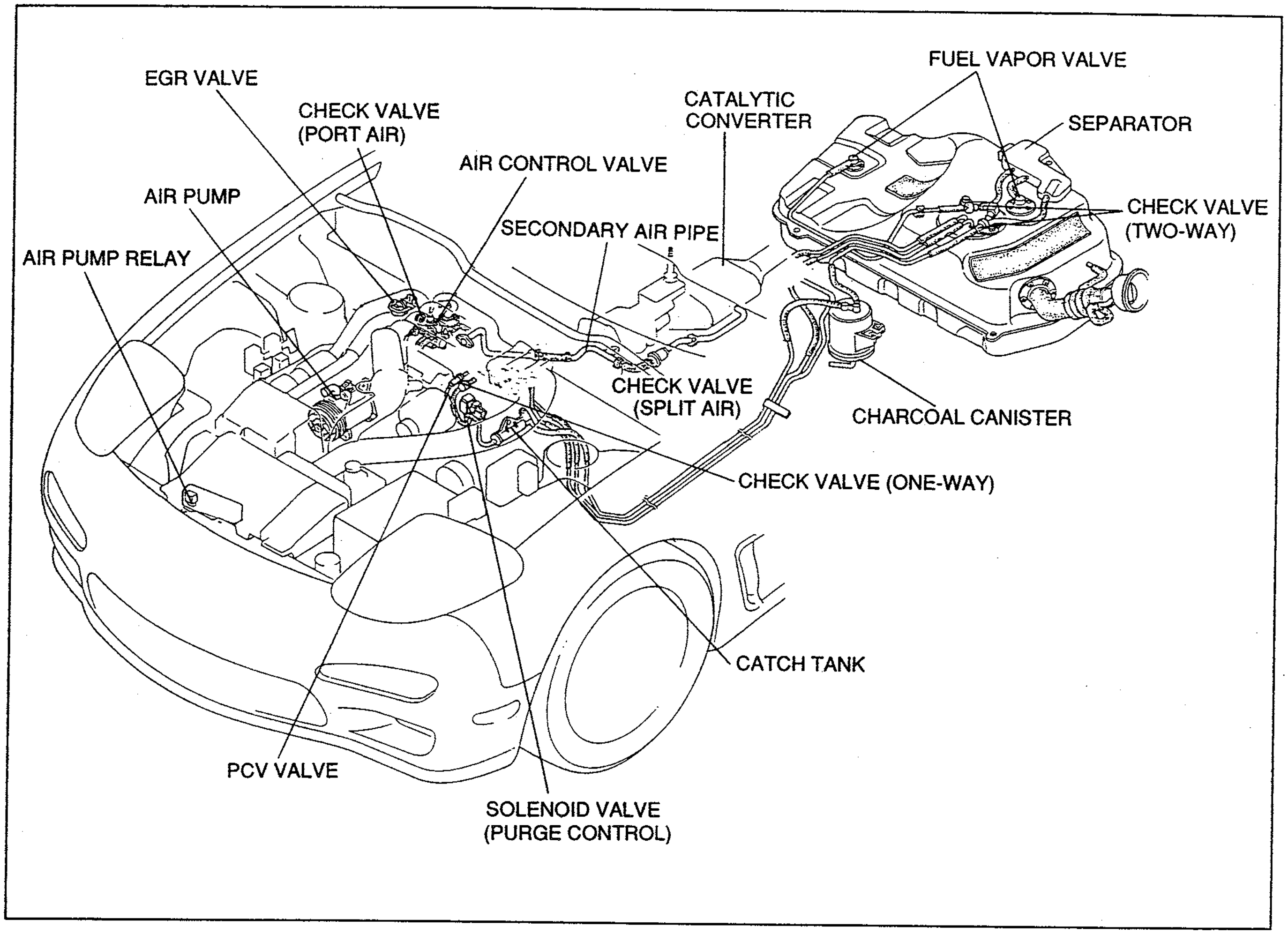

37U0FX-546

For reduced CO, HC, and NOx emissions, there is an elaborate emission control system as shown in the figure.

1. Secondary air injection system (air control valve)
   This system is to burn spent exhaust gases by introducing fresh air into the exhaust port or main converter.
2. Evaporative emission control system
   This system stores fuel vapors generated in the fuel tank in the charcoal canister while the engine is not running.
   This fuel vapor is stored in the canister until it is drawn into the extension manifold and burned when the engine is started.
   When the engine is running at idle, the purge control solenoid valve is opened slightly and a small amount of blowby gas is drawn into the dynamic chamber.
   At high rpm or heavy-load condition, the purge control valve is further opened and a larger amount of blowby gas is drawn into the intake manifold.
3. Deceleration control system
   - Dashpot: To prevent the throttle valves from closing suddenly.
   - Air bypass valve: To prevent excessive pressure in the intake air system during deceleration.
   - Fuel cut: To improve the fuel economy and to prevent engine bucking during deceleration.
4. Catalytic converter
   There are two three-way catalytic converters used to reduce exhaust emissions. The converters reduce CO and HC through oxidization and NOx by chemical reaction.
5. Positive crank case ventilation (PCV) system.
6. EGR (Exhaust gas recirculation) control system.

SECONDARY AIR INJECTION SYSTEM

OUTLINE

- The secondary air injection control system helps to clean the exhaust gas by introducing fresh air into the exhaust port or catalytic converter in relation to the driving conditions.
- The ECU controls secondary air by actuating the solenoid valves (port air control, secondary air relief, and port air bypass) and the air pump relay.

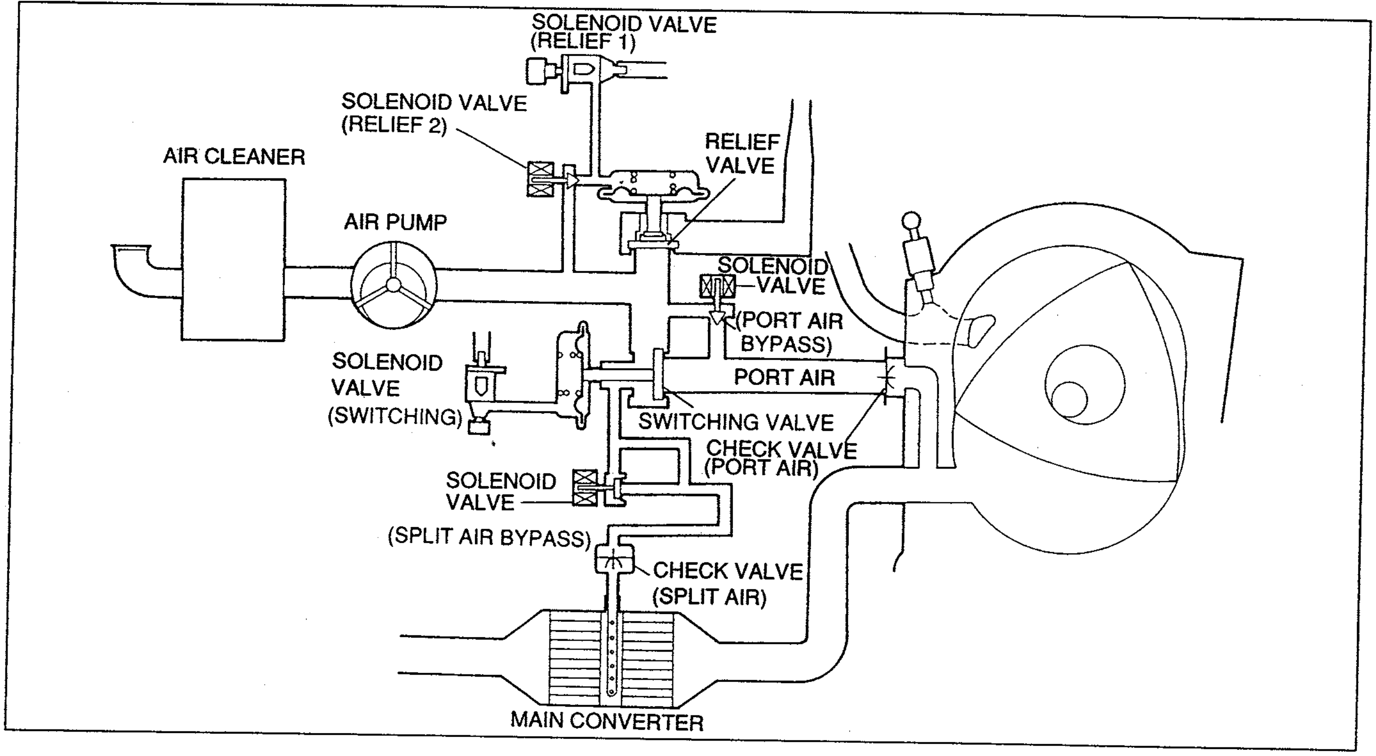

37U0FX-547

Air pump

- The air pump provides the secondary air to the air control valve.
- A vane type air pump is used. An electromagnetic clutch is filled to the pulley to stop secondary air discharge during high-speed or heavy-load operation.

Air pump relay

- The air pump relay is controlled by the ECU and turns the air pump electromagnetic clutch ON and OFF.

Solenoid valve (switching)

- The solenoid valve is controlled by the ECU and switches air flows between the secondary injection air port and split air port .

Solenoid valve (relief 1)

- In the feedback range (When fuel feedback is executed), this valve controls the air pump release pressure to improve fuel efficiency.

Solenoid valve (relief 2)

- When the engine is cold, this valve controls the relief valve opening pressure to further reduce exhaust emissions.

Solenoid valve (port air bypass)

- In the feedback range (When fuel feedback is executed), this valve controls the bypass port air to improve drivability.

Solenoid valve (split air bypass)

- In the feedback range (When fuel feedback is executed), this valve controls the split air pressure to improve fuel efficiency.

Air Control valve (ACV)

The ACV consist of Actuator (Relief, Switch) and solenoid valve (Relief 2, Port air bypass, Split air bypass).

FRONT VIEW

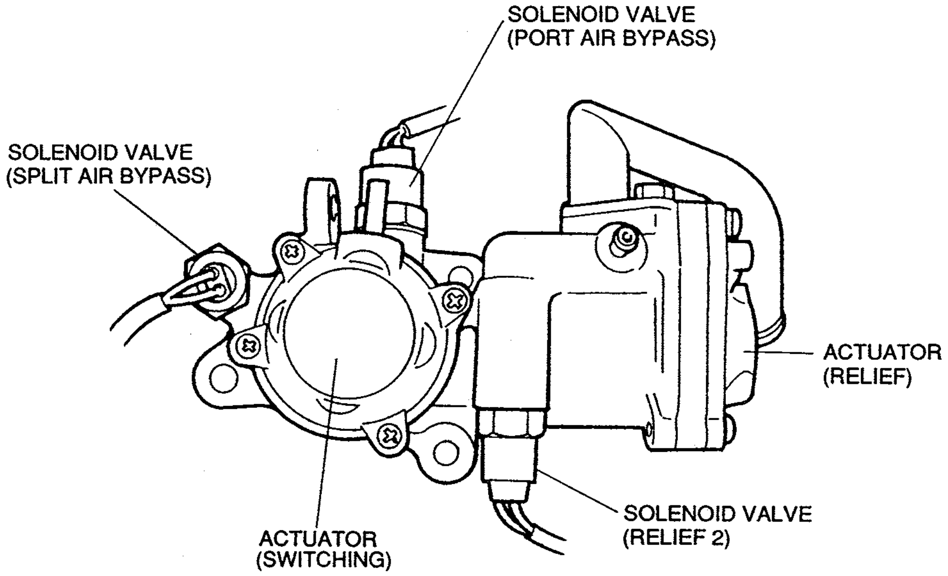

REAR VIEW

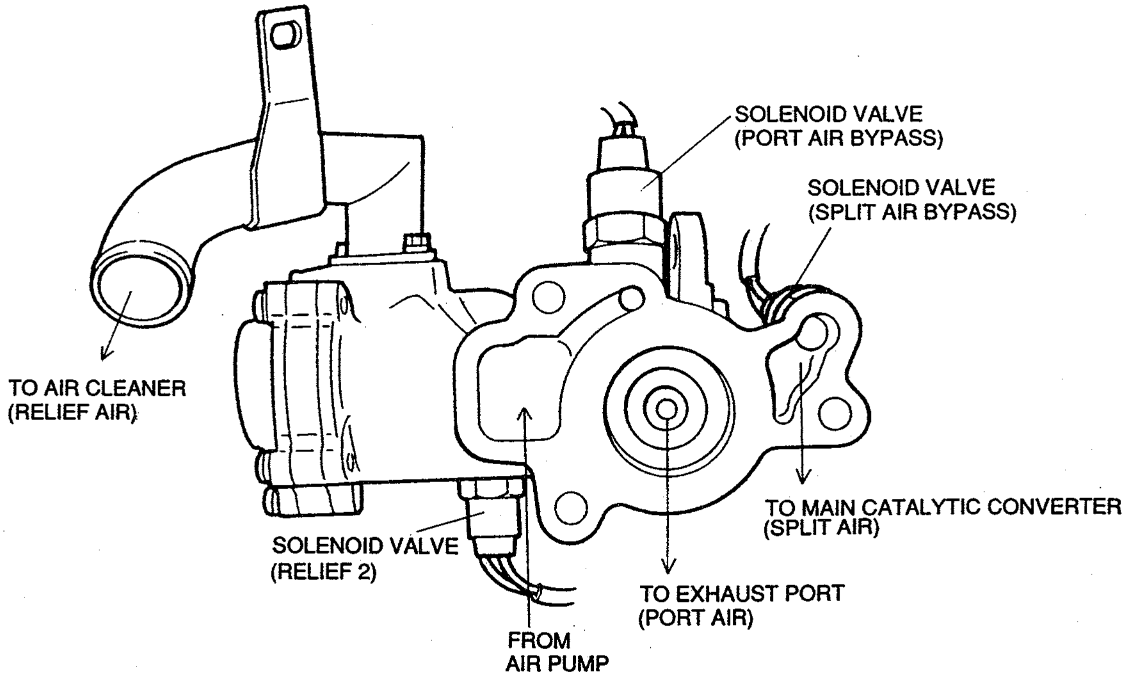

37U0FX-572

Operation

The engine operating conditions are monitored by the control unit according to signals from the various sensors and switches. A signal for the supply of secondary air which matches these conditions is sent to the air control valve.

37U0FX-573

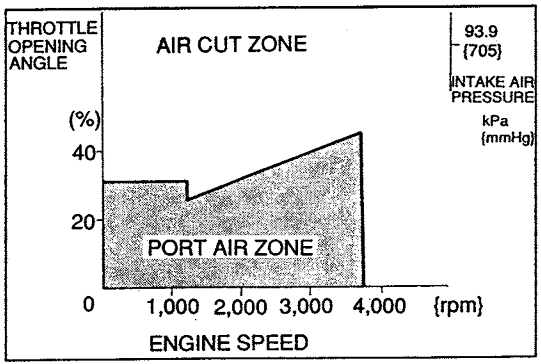

37U0FX-574

Engine coolant temperature below 15°C {59°F}

Port air zone
- Reduces CO and HC emissions.

Air cut zone
- Prevents abnormal increase of temperature within converter.

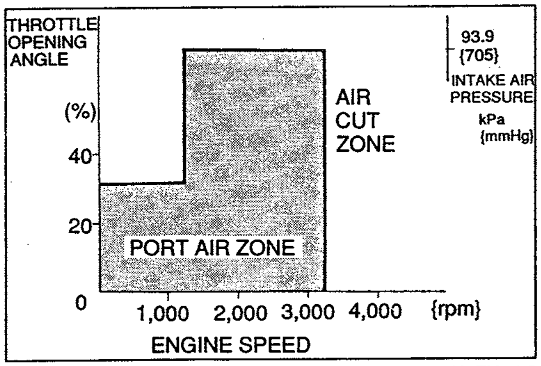

37U0FX-575

Engine coolant temperature 15—50°C {59—122°F}

Port air zone
- Reduces CO and HC emissions.

Air cut zone
- Prevents abnormal increase of temperature within converter.

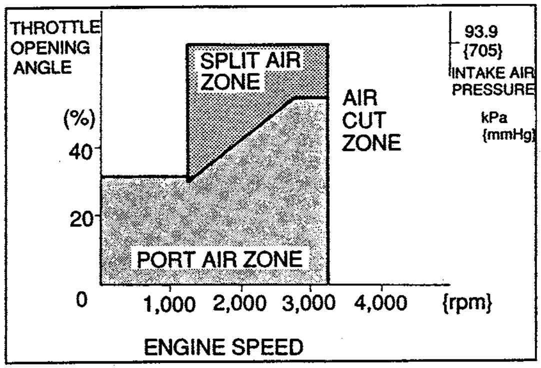

37U0FX-576

Engine coolant temperature above 50°C {122°F}

Port air zone
- Reduces CO and HC emissions.

Split air zone
- Reduces CO, HC and Nox emissions.

Air cut zone
- Prevents overheating of catalytic converter.

Note
- **If the heat hazard sensor is ON (floor temperature: more than 100°C {212°F}): air relief operates under all conditions.**

37U0FX-577

SECONDARY AIR INJECTION FLOW	ZONE	SOLENOID VALVE					SECONDARY AIR INJECTION
		SWITCHING	RELIEF 1	RELIEF 2	PORT AIR BYPASS	SPLIT AIR BYPASS	
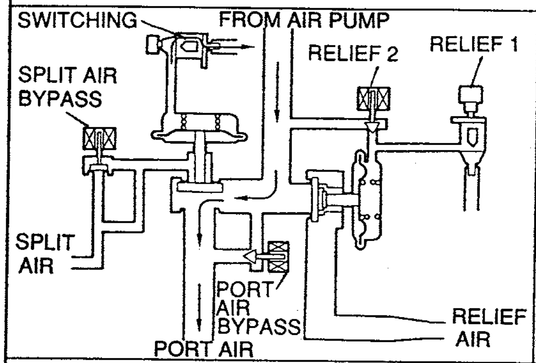	IDLE	OFF	OFF	OFF	OFF	OFF	PORT
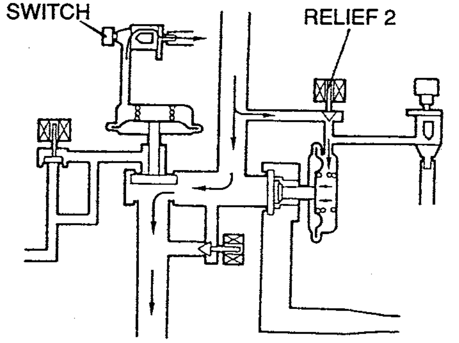	IDLE COLD START (approx. 300—500 sec.)	OFF	OFF	ON	OFF	OFF	PORT
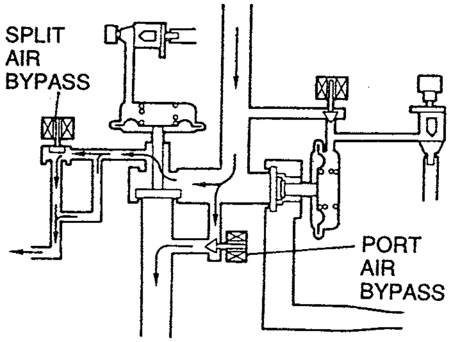	FEEDBACK (LOW SPEED LIGHT LOAD)	ON	OFF	OFF	ON	OFF	SPLIT + PORT (Small amount)
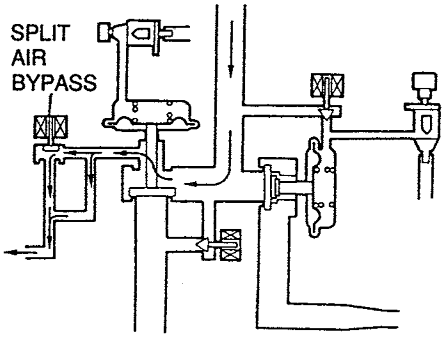	FEEDBACK	ON	OFF	OFF	OFF	ON	SPLIT
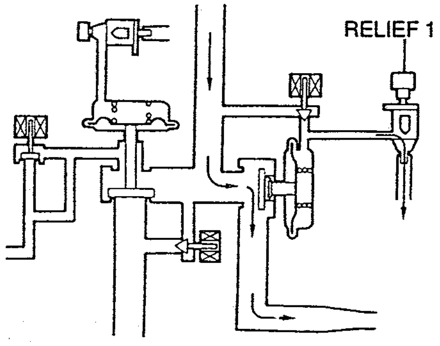	FEEDBACK OR BEFORE AIR PUMP OPERATION STOPS	ON	ON	OFF	OFF	OFF	AIR RELIEF

POSITIVE CRANKCASE VENTILATION (PCV) SYSTEM

OUTLINE

The PCV valve is operated by the intake manifold vacuum.

When the engine is running at idle, the PCV valve is opened slightly and a small amount of blowby gas is drawn into the extension manifold to be burned.

As the engine speed rises the PCV valve is opened further, allowing a larger amount of blowby gas to be drawn into the extension manifold.

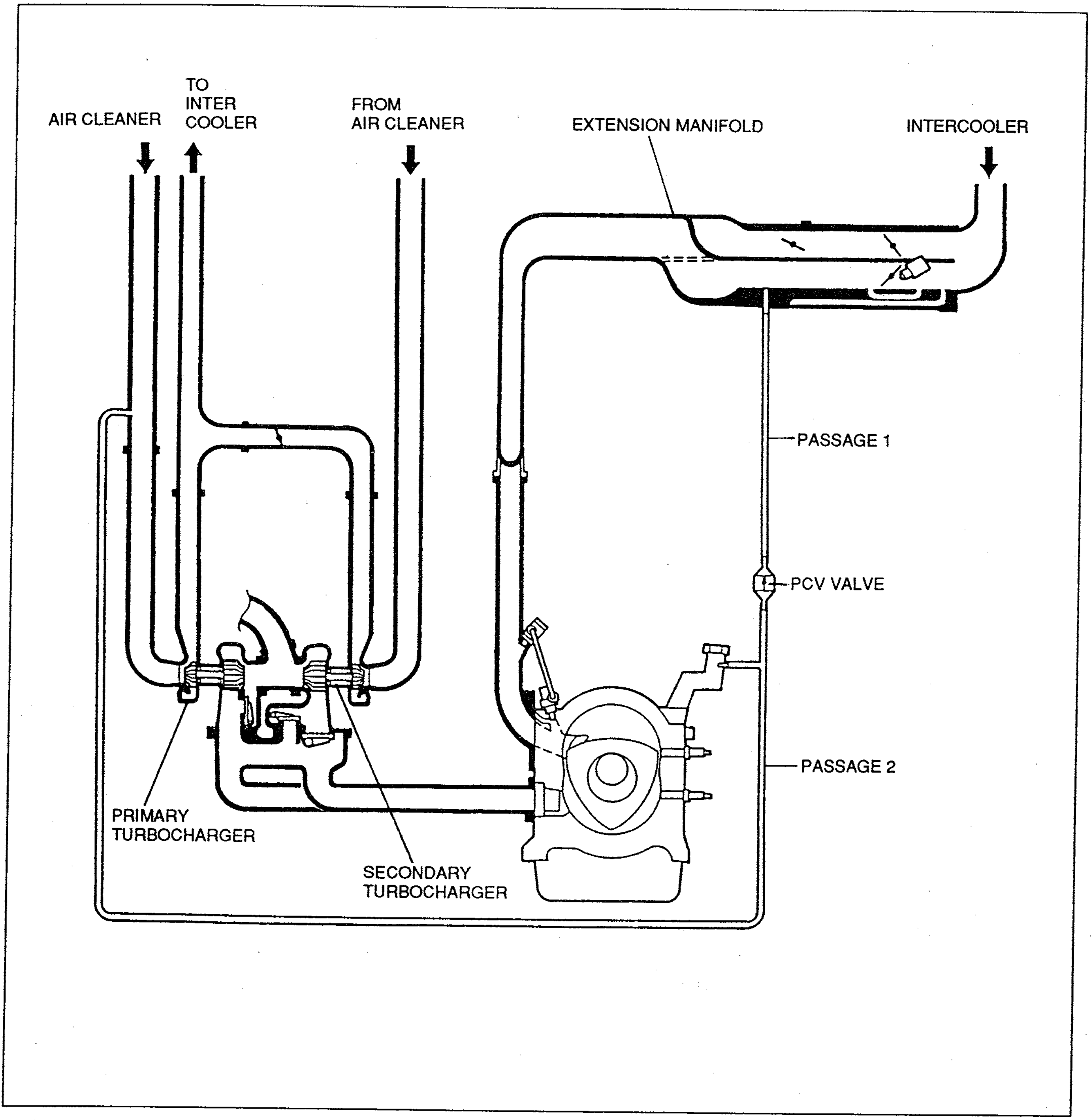

37U0FX-548

Operation

(1) Intake manifold pressure below atmospheric pressure:
  - The blowby gas flows through passage 1 and is pulled into the intake manifold.

(2) Intake manifold pressure at or above atmospheric pressure:
  - When the intake manifold pressure becomes positive, passage 1 is closed by the PCV valve. The blowby gas flows through passage 2 and is pulled into the intake portion of the turbocharger.

EGR (EXHAUST GAS RECIRCULATION) CONTROL SYSTEM

OUTLINE

This system recirculates a small amount of exhaust gas into the intake manifold to reduce the combustion temperature and reduce NOx emissions.
The system consists of the EGR valve, EGR switch, solenoid valve, ECU, and input devices.

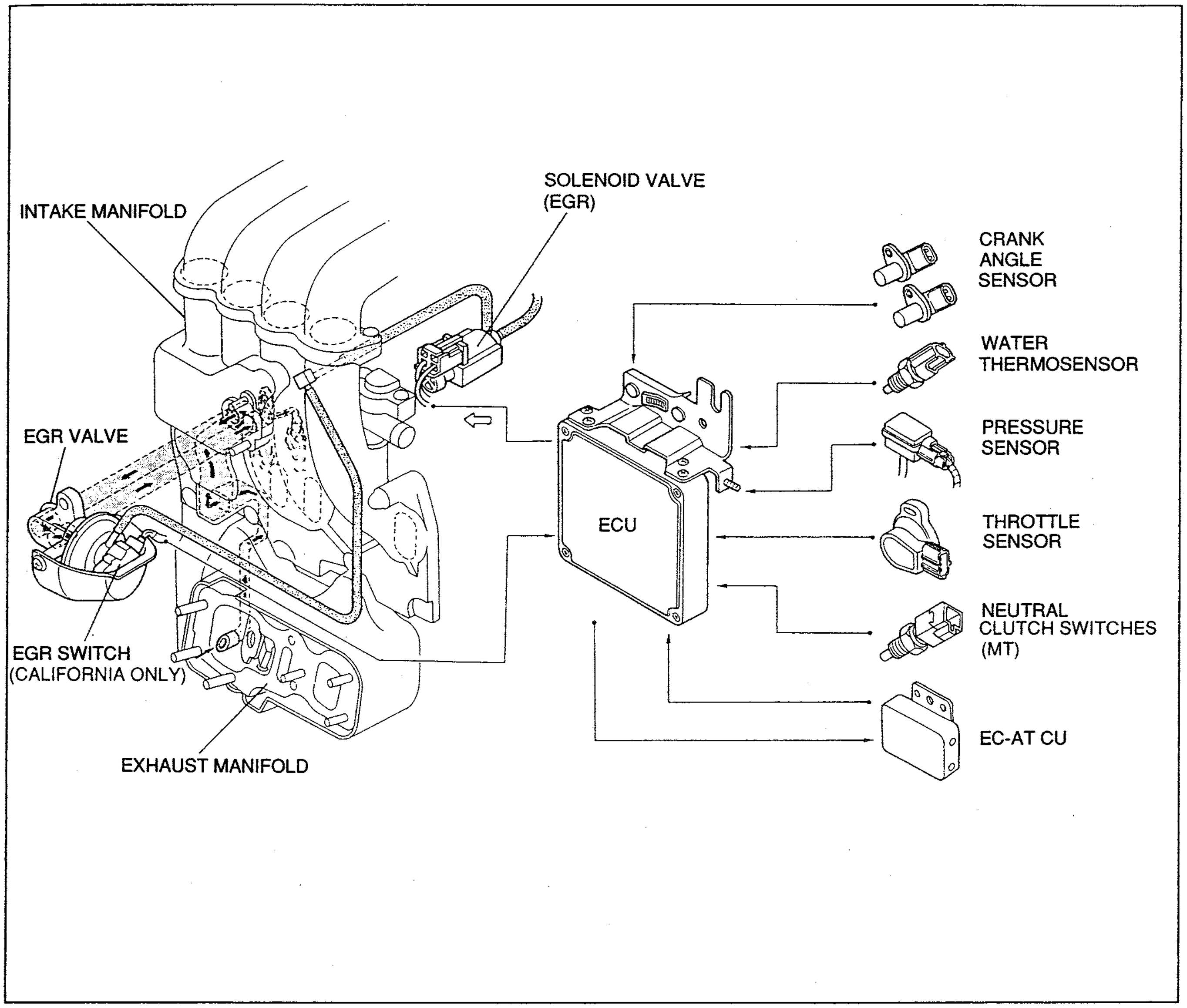

37U0FX-549

Operation

Cold engine (coolant temperature : below 70°C {158°F})

EGR operation is stopped to improve drivability when the engine is cold.

Warm engine

The ECU controls the solenoid valve to supply EGR gases as described below.

Operating condition	EGR operation	Remark
Idle	Stopped	—
Deceleration		
High engine speed		Above 3,850 rpm
Heavy load		—
Others	EGR gas recirculated	MT : 5th gear AT : OD Above 1,700 rpm

CATALYTIC CONVERTER SYSTEM

DESCRIPTION

Two three-way catalytic converters are used to reduce CO, HC, and NOx emissions.
For efficient operation, the front converter is placed close to the exhaust manifold so that it will heat up quickly and purify exhaust gas efficiently when the engine is cold.
The front converter also protects the main converter from damaged by acting as a phosphorus and lead filter.

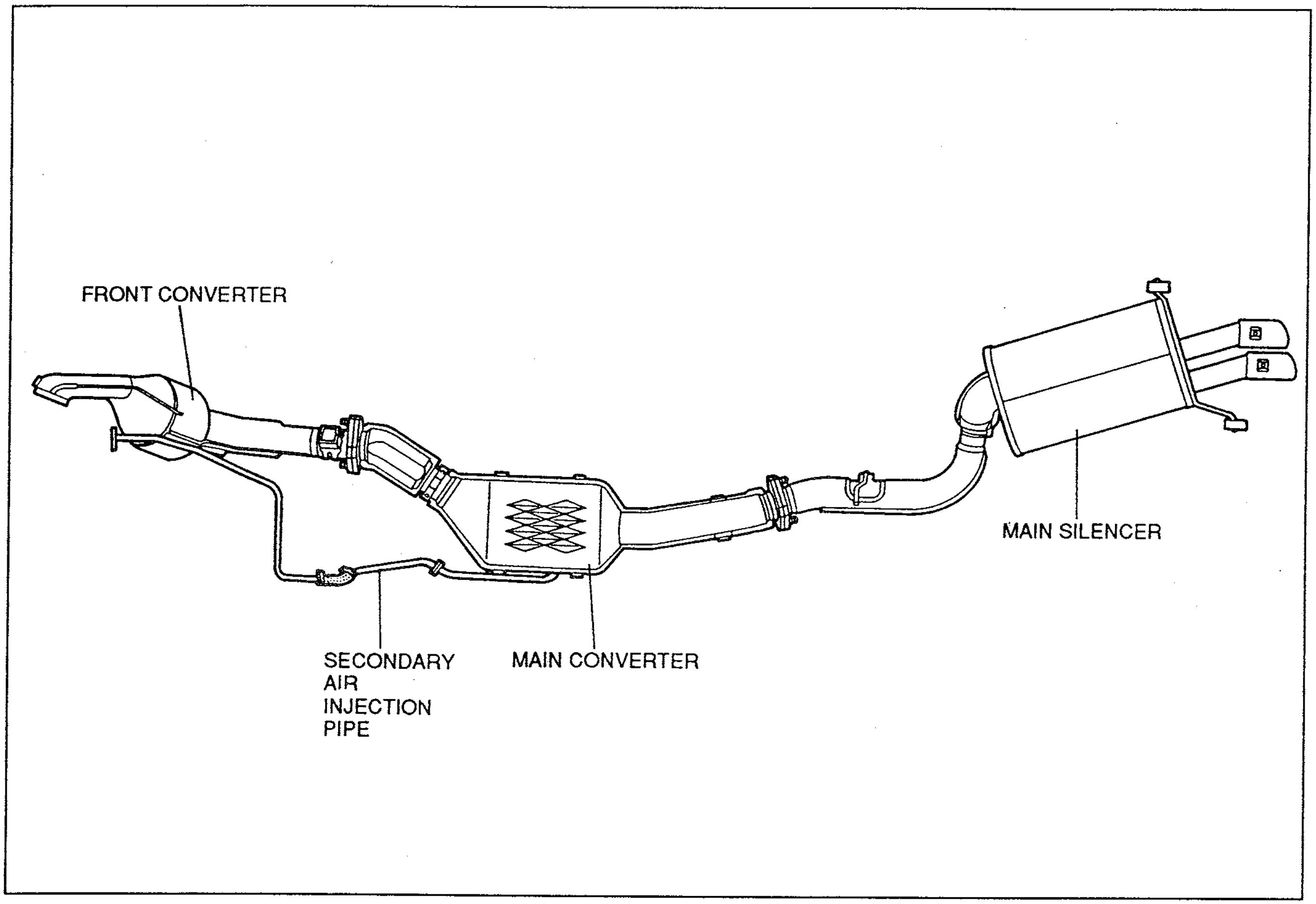

37U0FX-550

The catalytic converter reduces CO and HC, emissions through oxidization and reduces NOx emissions by chemical reaction.

Catalytic converter	Type
Front converter	Metal
Main converter	Monolith

Operation

(1) Before the engine is warmed up, when large amounts of CO and HC are created, the converter is supplied port air and both the first and second stages of the main converter are used as oxidization catalysts.
(2) In the normal driving range, the converter is supplied split air and used the first stage is used as the ternary catalyst and the second stage as the oxidization catalyst.
(3) During high-speed driving secondary air to converter is stopped, and the first and second stages are used as the ternary catalyst.

	First stage	Second stage	Remark
Port air	Oxidation	Oxidation	Low-speed range, Deceleration range
Split air	Ternary	Oxidation	Cruising range
Air cut	Ternary	Ternary	High-speed range

37U0FX-551

EVAPORATIVE EMISSION CONTROL SYSTEM

While the engine is stopped, the evaporative emission control system temporarily stores evaporated gasoline fumes from the fuel tank in the canister. The stored gas is then pulled into the air intake system for combustion when the engine is running. This operation prevents gasoline fumes from flowing out to the atmosphere.
Sending a large volume of evaporative fumes at one time into the air intake system would upset the air fuel ratio; thus, the ECU uses the purge control solenoid valve to regulate this volume.

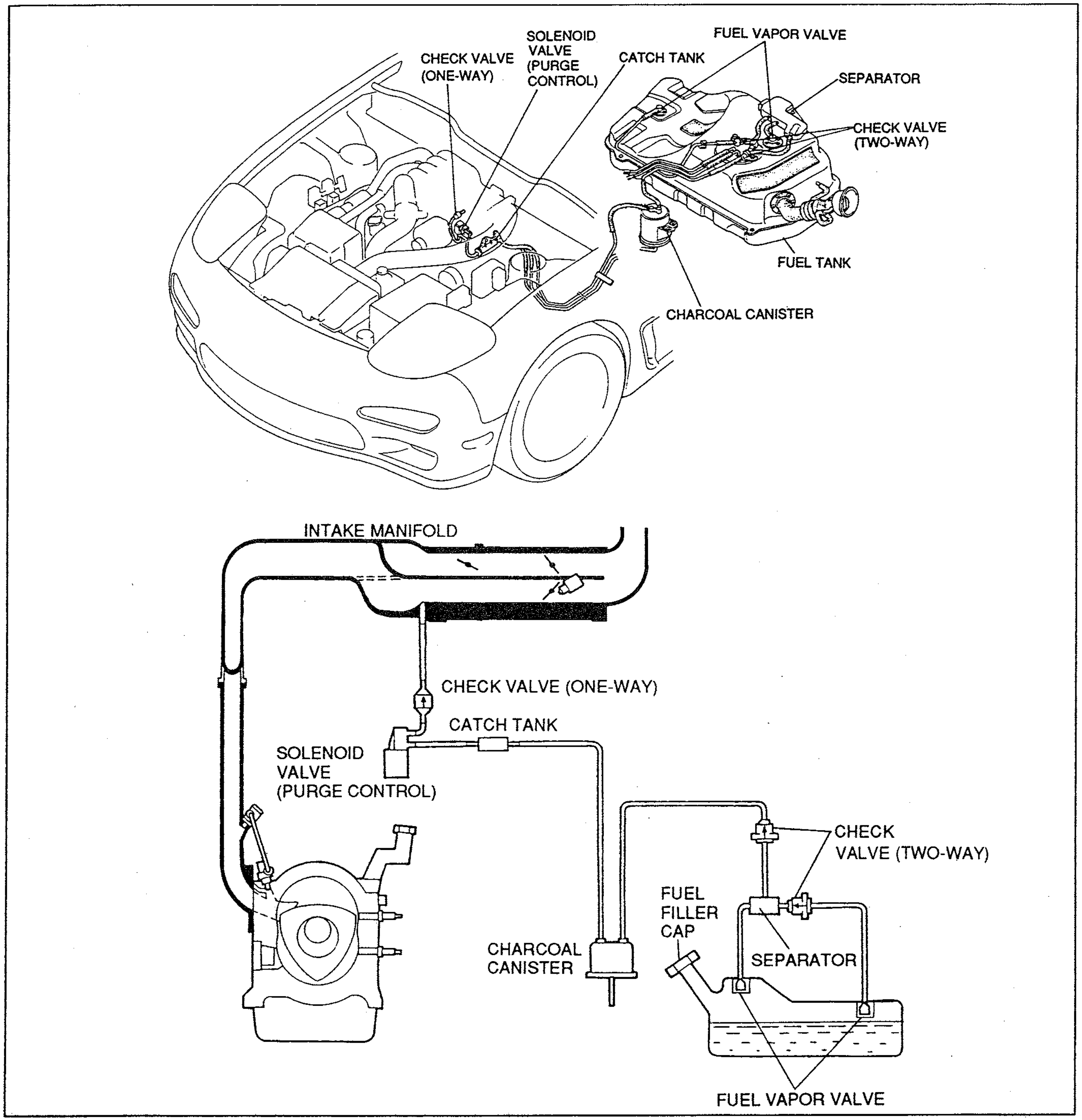

37U0FX-552

Operation

Engine stopped

The evaporative fumes from the fuel tank are absorbed by the charcoal in the canister.

Engine running and load applied

The gasoline fumes absorbed by the charcoal canister are drawn into the engine via the purge control solenoid valve. The volume of gas introduced depends on the engine operating conditions.

DECELERATION CONTROL SYSTEM

DESCRIPTION

- Dashpot : To prevent the throttle valves from closing suddenly.
- Solenoid valve (ISC) : To prevent afterburn, air is supplied to intake manifold during deceleration.
- Fuel cut control : To improve the fuel economy and to prevent engine bucking during deceleration.
- Air bypass valve : Bypasses compressed air from after the turbocharger to air cleaner during deceleration to prevent noise.

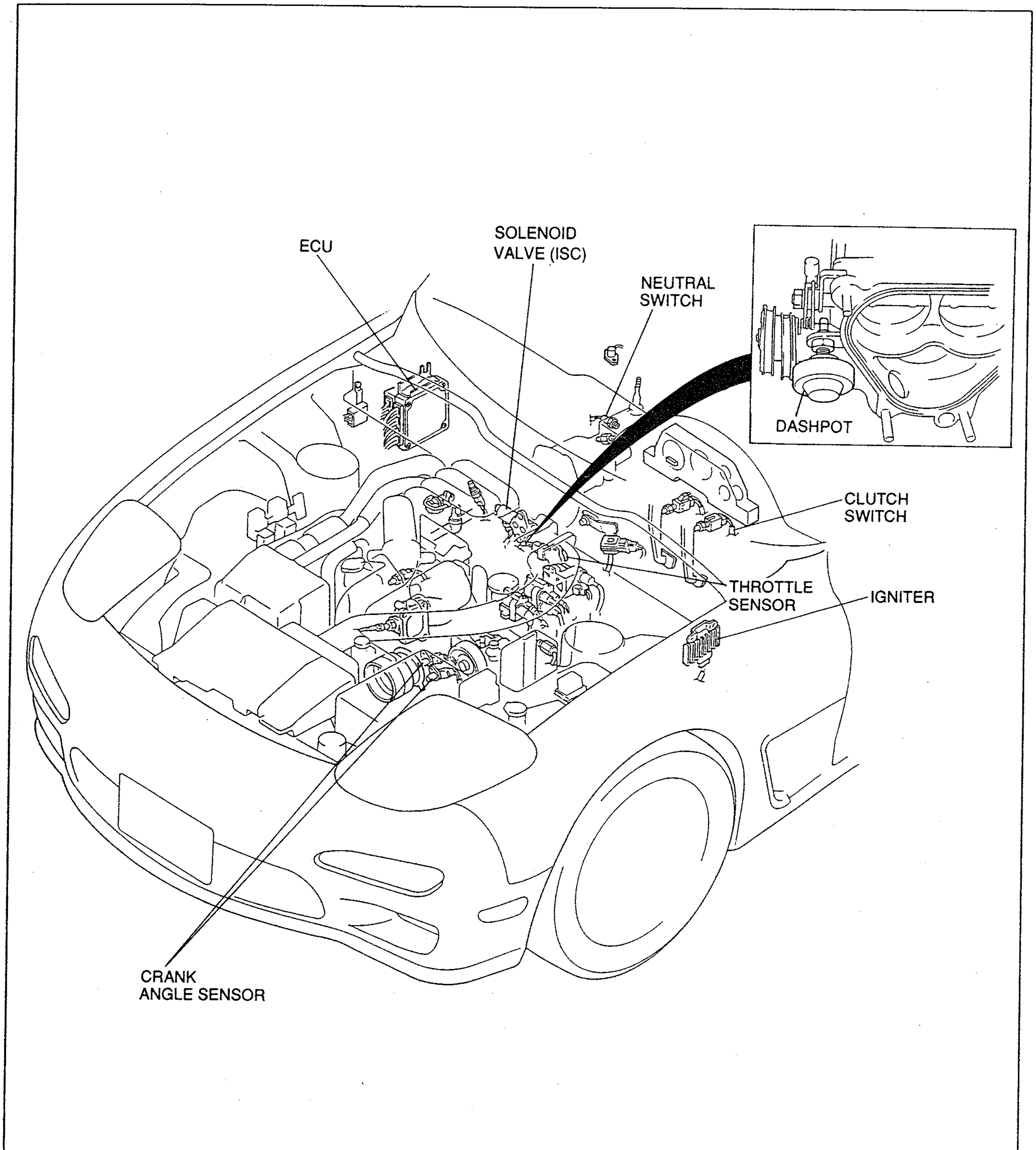

37U0FX-553

A/C CUTOFF SYSTEM

To improve idle smoothness just after starting the engine and to improve acceleration performance, an A/C cutoff system is used.

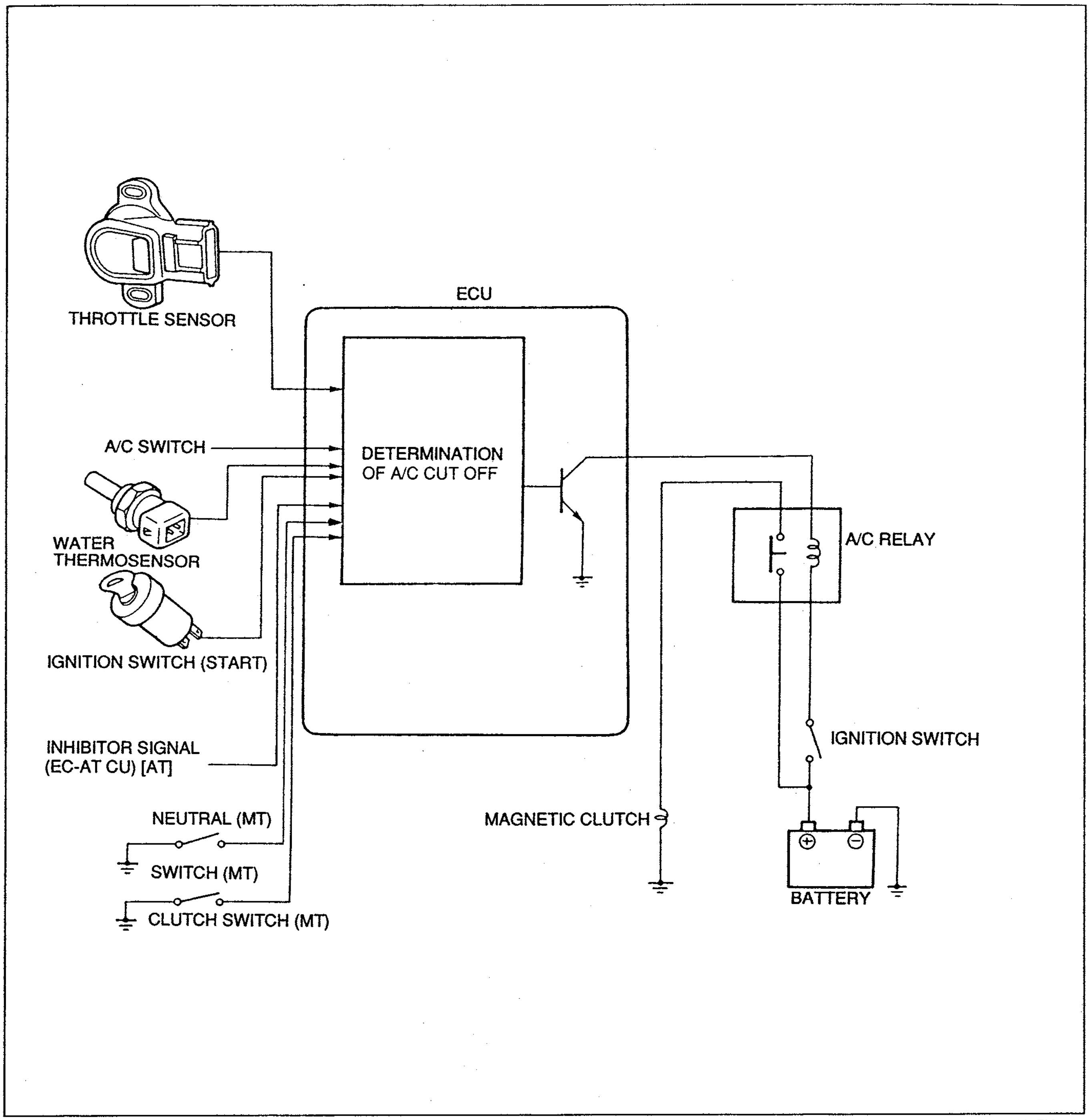

37U0FX-554

Operation

Current to the air conditioner magnetic clutch and the condenser fan is cutoff to momentarily stop their operation under the conditions below.

Engine condition	Purpose	Cut-off period
After engine started	Improved idle	Approx. 8 sec.
Throttle valve fully open	Improved drivability	Approx. 7 sec.
Start up acceleration (AT)	Improved drivability	Approx. 1.5 sec.
Water temperature over 117°C {235°F}	Prevent engine from overheating	—

ELECTRIC COOLING FAN CONTROL

To improve engine reliability, the electric cooling fans are controlled by the ECU and E/L (electrical load) unit. The fans are run at low, middle, on high-speed, depending on the operating condition.

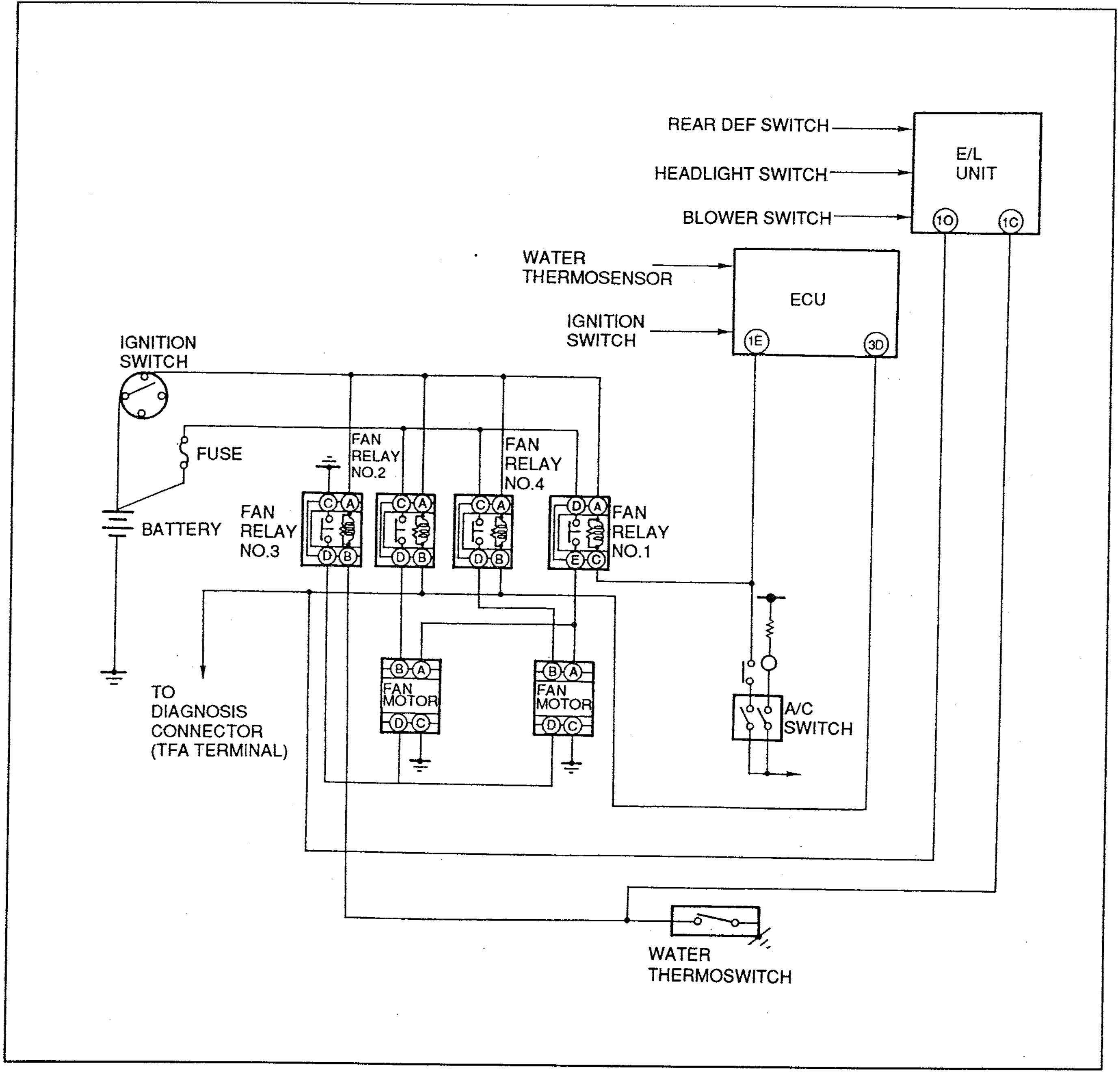

37U0FX-555

Operation

Engine condition	A/C operation	Fan relay No.1	Fan relay No.2	Fan relay No.3	Fan relay No.4	Cooling fan operation
Coolant temperature below 105°C {221°F}	OFF	OFF	OFF	OFF	OFF	OFF
	ON	ON	OFF	OFF	OFF	LOW
Coolant temperature 105—108°C {221—226°F}	OFF	OFF	ON	OFF	ON	LOW
	ON	ON	ON	OFF	ON	MIDDLE
Coolant temperature above 108°C {226°F} (water thermoswitch ON)	OFF	OFF	ON	ON	ON	MIDDLE
	ON	ON	ON	ON	ON	HIGH
Water thermosensor malfunction	—	OFF	ON	OFF	ON	LOW
TFA terminal ground	—	OFF	ON	OFF	ON	LOW

TORQUE REDUCTION CONTROL SYSTEM

When shifting, the reduce torque signal is sent from the EC-AT control unit to the ECU. The ECU retards the ignition timing and cuts fuel injection when the engine condition allows it. The ECU then sends the torque reduced signal to the EC-AT control unit.
The timing is not retarded and the fuel is not cut even if the reduce torque signal is input to the ECU under the following conditions:

- When the water thermosensor fails.
- When the throttle sensor fails.
- When the intake thermosensor fails.
- When the pressure sensor fails.
- When the knock sensor fails.
- When the coolant temperature drops below 60°C {140°F}.
  (Refer to Section K for further details.)

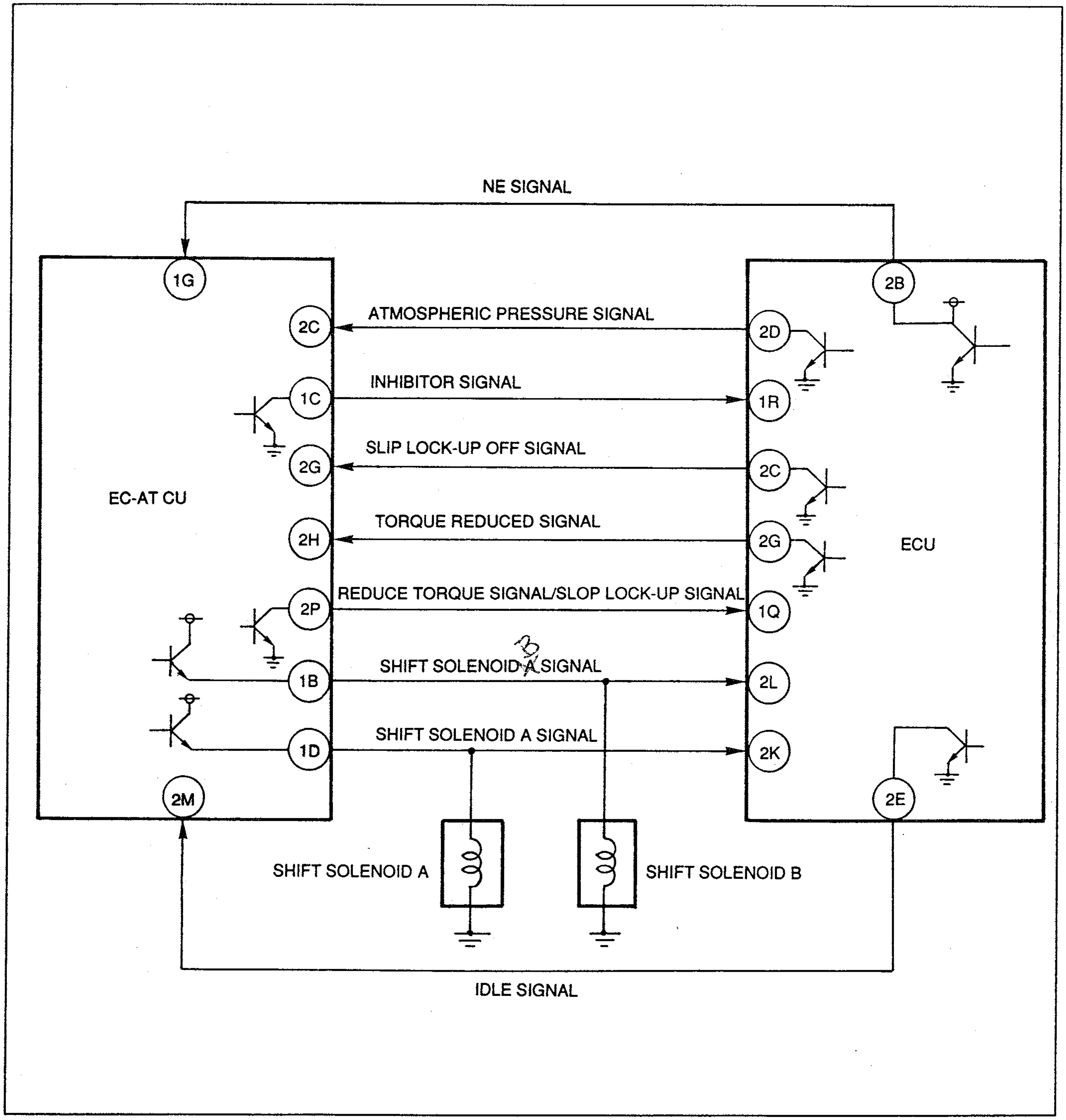

37U0FX-556

SELF-DIAGNOSIS SYSTEM

OUTLINE

There is an engine protection system contained in the ECU that is activated if an irregularity occurs in any of the input or output devices. It has the following three functions: fail-safe, self-diagnosis, and service code display. The ECU also contains a monitor function to aid the technician in judging the condition of the individual switches and the oxygen sensor.
Using the DT-S1000 Diagnosis Tester **SST** allows it performing real-time to monitoring of the input and output signals of the ECU, as well as instituting a simulation function to drive the output systems.

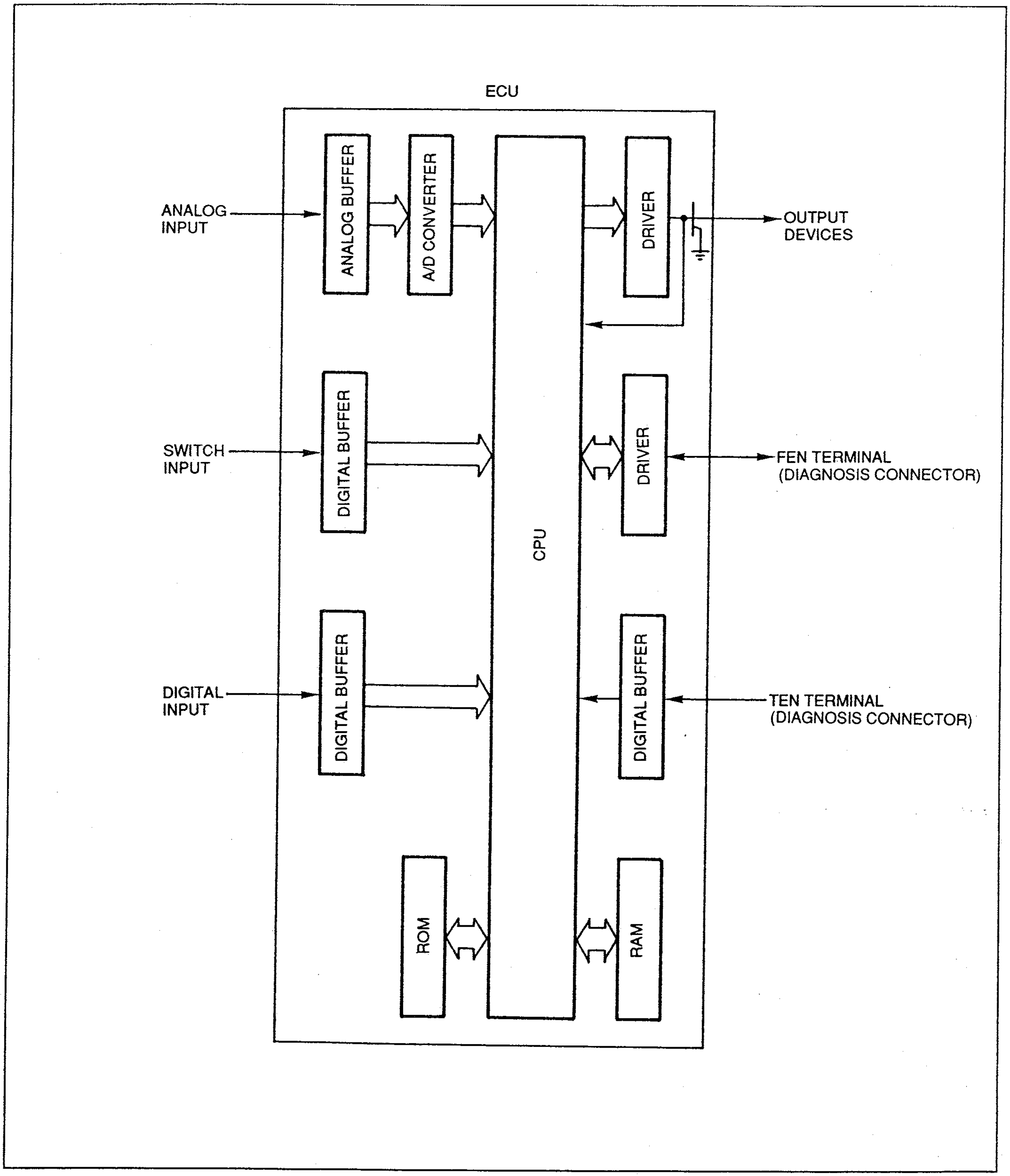

37U0FX-557

DT-S1000

For easy troubleshooting and input and output devices inspection of the EGI control system, the DT-S1000 Diagnosis Tester **SST** is suggested.

The DT-S1000 Type-I Diagnosis Tester has the following features.

1) Service code check : Reads service codes from the control unit, and displays the codes and detected conditions on the monitor.
2) Monitor check : ① Reads and displays input switch monitor signals from the ECU.
② Reads the O_2 monitor signal from the ECU and displays it on a graph.
3) Service data check : ① Reads the input/output data from the ECU and displays it as a numerical value or graph.
② Up to ten minutes of the above data ① can be recorded within the DT-S1000.
③ The above data ② can be downloaded on a data disk.
4) Simulation check : Optional output devices can be operated by the DT-S1000

When inspecting the ECU and the related input and output devices, use the **DT-S1000 Base unit** (49 F088 001), **Power unit DC-12V** (49 F088 002), **Harness power unit DC** (49 F088 003) **IF-Adapter Type-I** (49 F088 004), **Harness Type-I** (49 F088 005) and **System Disk Type-I** (Ver. 1.00) (49 F088 011)

DT-S1000 BASE UNIT

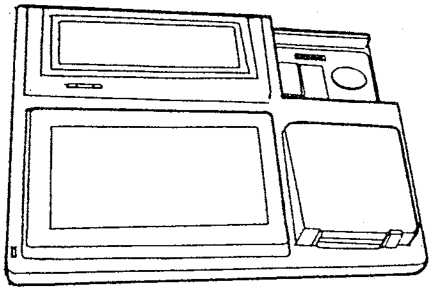

HARNESS TYPE I

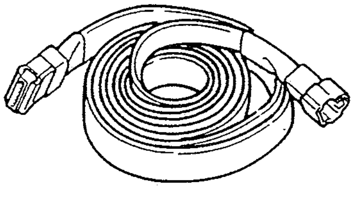

POWER UNIT DC-12V
UNIT DC-12V

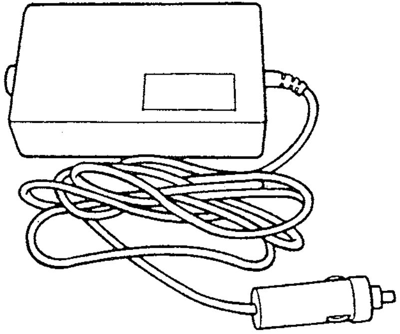

POWER UNIT

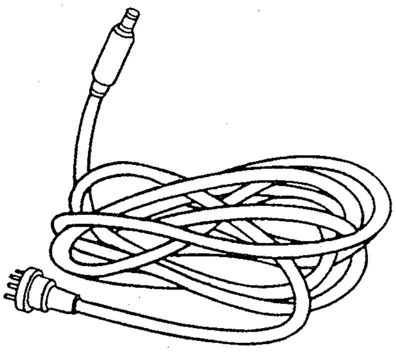

IF-ADAPTER TYPE-1

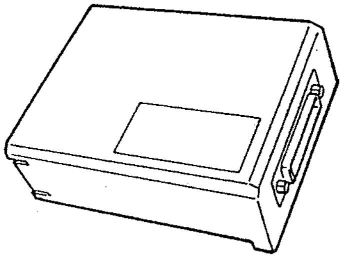

SYSTEM DISK TYPE I (Ver. 1.00)
(2.5 INCH FLOPPY DISK)

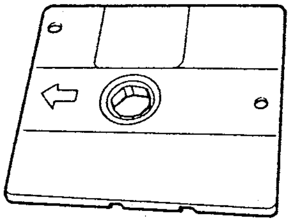

37U0FX-558

SERVICE CODE DISPLAY, SELF-DIAGNOSIS, AND FAIL-SAFE TABLES

No.	Indicator flashing pattern	Diagnosed circuit	Condition	Fail-safe	Memo-rized
02	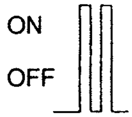	Crank angle sensor (NE signal)	No NE signal	Fuel injection and ignition stopped	Yes
03	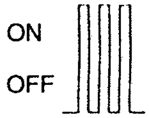	Crank angle sensor (G signal)	No G signal		Yes
05	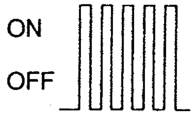	Knock sensor	Open or short circuit	Ignition timing retarded	Yes
06	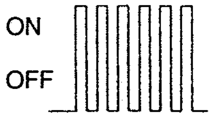	Speedometer sensor	No speedometer sensor signal	—	Yes
09	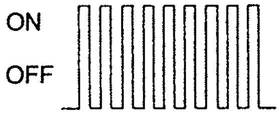	Water thermosensor	Open or short circuit	Maintains constant 80°C {176°F} command	Yes
11	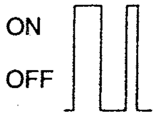	Intake air thermosensor		Maintains constant 20°C {68°F} command	Yes
12	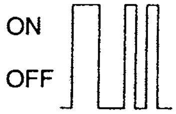	Throttle sensor (fully-range)		Maintains constant command of throttle valve 20% open	Yes
13	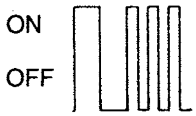	Pressure sensor		Basic fuel injection amount fixed and ignition timing fixed	Yes
14	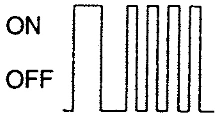	Atmospheric pressure sensor (in ECU)		Maintains constant command of seal level pressure	Yes
15	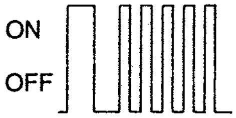	Oxygen sensor	Sensor output continues less than 0.55V 120 sec. in feedback zone	Cancels engine feedback operation	Yes
16	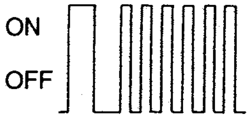	EGR switch	Open or short circuit	—	Yes
17	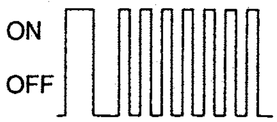	Feedback system	Sensor output not changed for 25 sec. in feedback zone	Cancels engine feedback operation	Yes

No.	Indicator flashing pattern	Diagnosed circuit	Condition	Fail-safe	Memo-rized
18	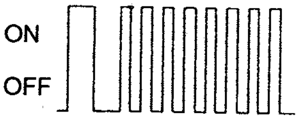	Throttle sensor (narrow-range)	Open or short circuit	Maintains constant command of throttle valve fully open	Yes
20	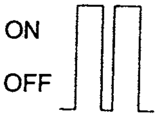	Metering oil pump position sensor		Maintains constant command of MOP • Basic fuel injection fixed • Basic ignition timing fixed	Yes
23	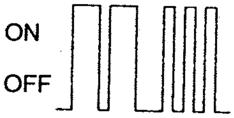	Fuel thermosensor		Maintains constant 50°C {122°F} command	Yes
25	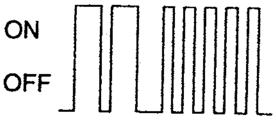	Solenoid valve (pressure regulator control)		—	No
26	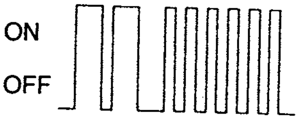	Metering oil pump stepping motor (MOP)		• Maintains constant command of MOP • Basic fuel injection fixed • Basic ignition timing fixed	No
27	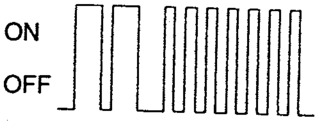	Metering oil pump sensor (MOP)	Open on short circuit or sticking of MOP sensor		Yes
28	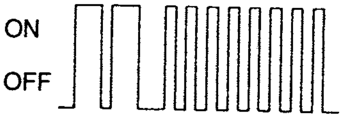	Solenoid valve (EGR)	Open or short circuit	—	No
30	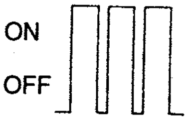	Solenoid valve (split air bypass)		—	No
31	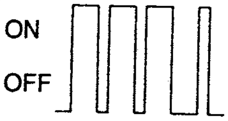	Solenoid valve (relief1)			No
32	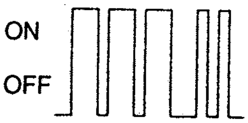	Solenoid valve (switching)		Air pump operation stopped	No
33	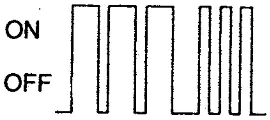	Solenoid valve (port air bypass)		—	No
34	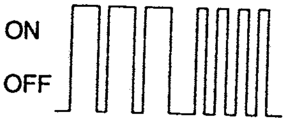	Solenoid valve (idle speed control [ISC])		—	No

No.	Indicator flashing pattern	Diagnosed circuit	Condition	Fail-safe	Memo-rized
37	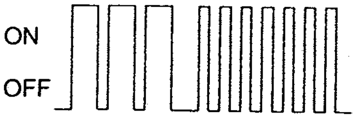	Metering oil pump	Low battery voltage	Maintains constant command of MOP Basic fuel injection fixed Basic ignition timing fixed	Yes
38	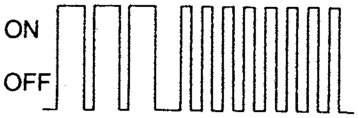	Solenoid valve (accelerated warm-up system) [AWS]	Open or short circuit	—	No
39	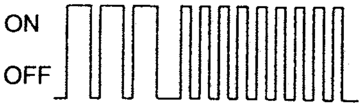	Solenoid valve (relief 2)		—	No
40	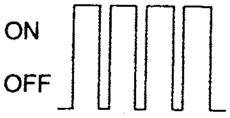	Solenoid valve (purge control)		—	No
42	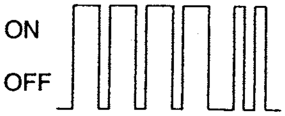	Solenoid valve (turbo precontrol)		—	No
43	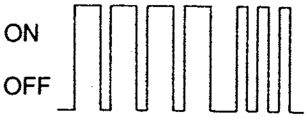	Solenoid valve (wastegate control)		Maintains constant command of MOP Basic fuel injection fixed Basic ignition timing fixed	No
44	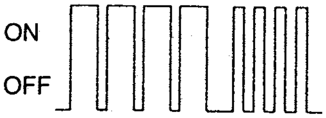	Solenoid valve (turbo control)		Maintains constant command of MOP Basic fuel injection fixed Basic ignition timing fixed	No
45	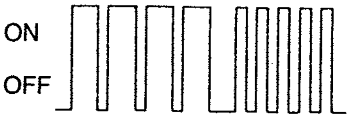	Solenoid valve (charge control)		—	No
46	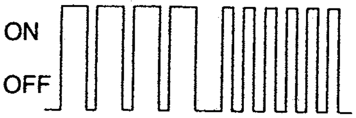	Solenoid valve (charge relief)		—	No
50	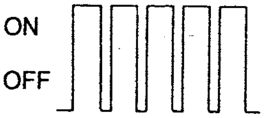	Solenoid valve (double throttle control)		—	No
51	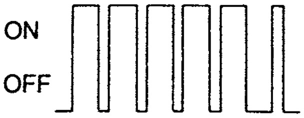	Fuel pump relay		Maintains constant command of MOP Basic fuel injection fixed Basic ignition timing fixed	No
54	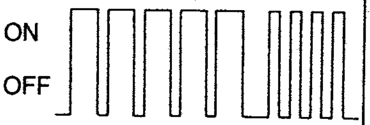	Air pump relay		—	No

No.	Indicator flashing pattern	Diagnosed circuit	Condition	Fail-safe	Memo-rized
71	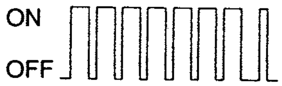	Injector (front secondary)	Open circuit	• Basic fuel injection fixed	No
73	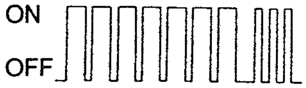	Injector (rear secondary)		• Basic ignition timing fixed	No
76	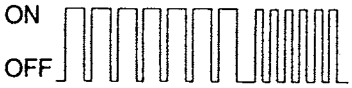	Slip lockup off signal (EC-AT CU)	Open or short circuit	—	No
77	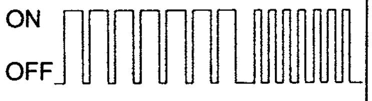	Torque reduced signal (EC-AT CU)		—	No

37U0TX-559

Caution

- **If more than one failure is present, the code numbers will be indicated in numerical order, lowest number first.**
- **After repairing a failure(s), turn off the ignition switch and disconnect the negative battery cable for 20 seconds and depress the brake pedal to erase the service code(s) from the ECU memory.**

SWITCH MONITOR FUNCTION

With the System Selector test switch set to Self Test, operation of individual switches is monitored as described below by using the (System Selector and the Self-Diagnosis Checker **SSTs**).
The switches can also be checked by using the DT-S1000 **SST**.

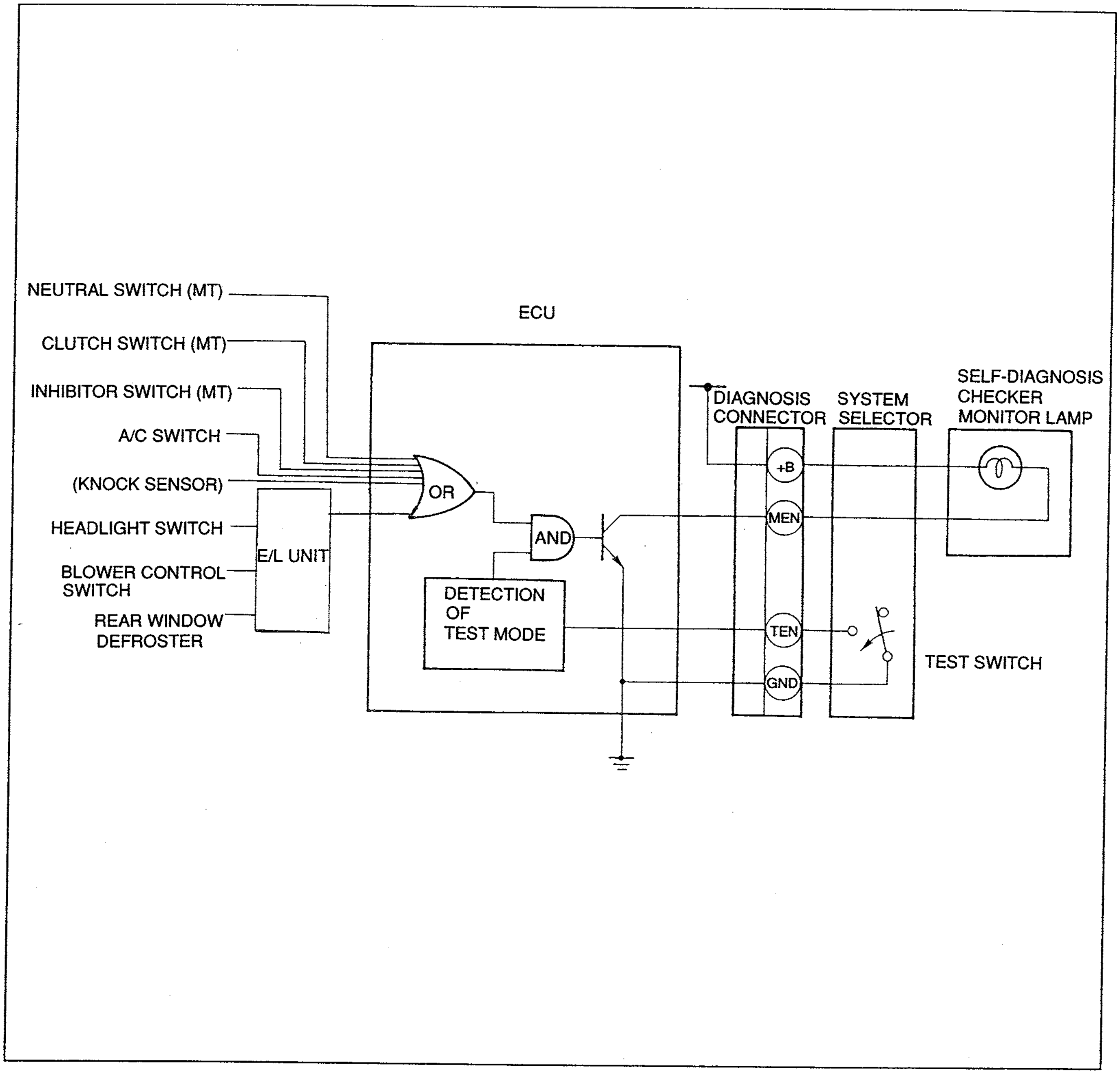

37U0FX-560

Caution

- **If either of the switches remains activated, the monitor lamp will be illuminated.**

Switch	Monitor lamp		Remark
	Light ON	Light OFF	
Clutch switch (MT)	Pedal released	Pedal depressed	In gear
Neutral switch (MT)	In gear	Neutral	Clutch pedal released
Inhibitor switch (AT)	R, D, S, L range	P, N range	—
Headlight switch	ON	OFF	Headlights ON
Blower control switch	ON	OFF	Blower switch at 3rd or higher position
Rear window defroster switch	ON	OFF	—
A/C switch (if equipped)	ON	OFF	Blower switch at 1st or higher position

OXYGEN SENSOR MONITOR FUNCTION

With the System Selector test switch set to O_2 Monitor, the oxygen sensor is monitored by the Self-Diagnosis Checker as described below.

Item monitored	Condition		Function
	Engine	System Selector switch	
Oxygen sensor output signal	Running	O_2 monitor	Oxygen sensor output more than 0.45V Monitor lamp : Flashes

With the DT-S1000 at O_2 monitor check, the oxygen sensor signal is displayed as a graph.

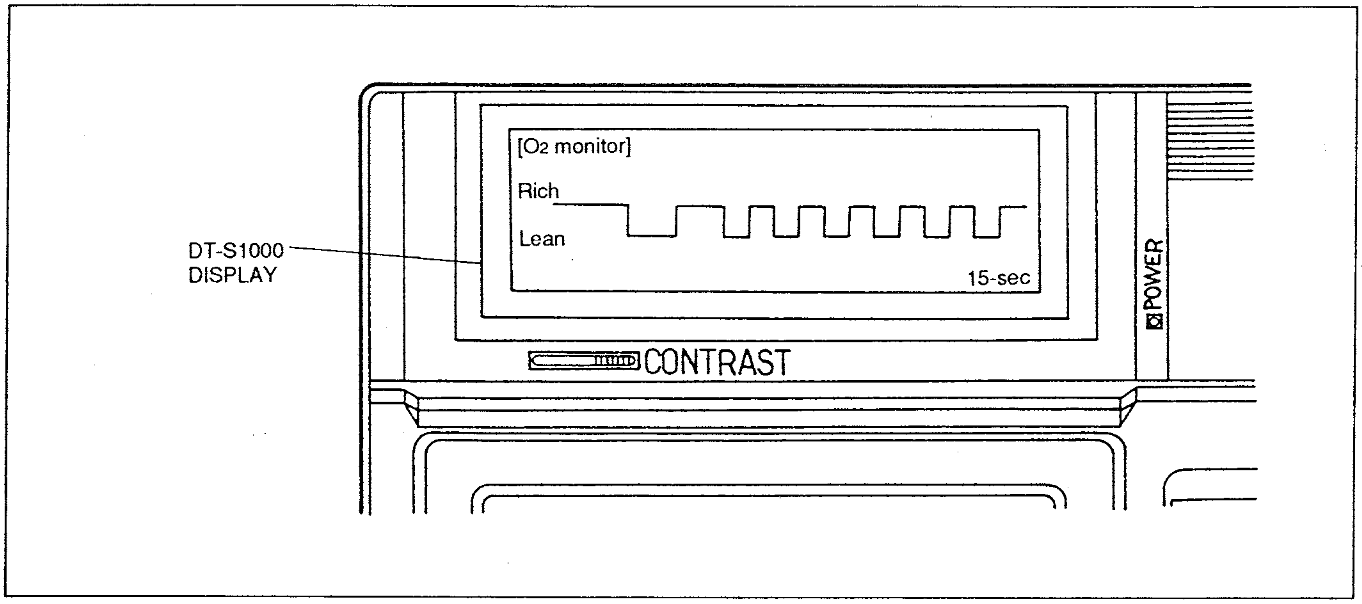

37U0FX-561

KNOCK SENSOR MONITOR FUNCTION

With the System Selector set to SELF-TEST the knock sensor is monitored by the Self-Diagnosis Checker as described below.

Item monitored	Condition			Function
	Test	Ignition switch	System Selector switch	
Knock sensor output signal	Tap engine hanger lightly with hammer	ON	SELF-TEST	Monitor lamp: Flashes

With the DT-S1000 at input switch monitor check, operation of the knock sensor is monitored and displayed.

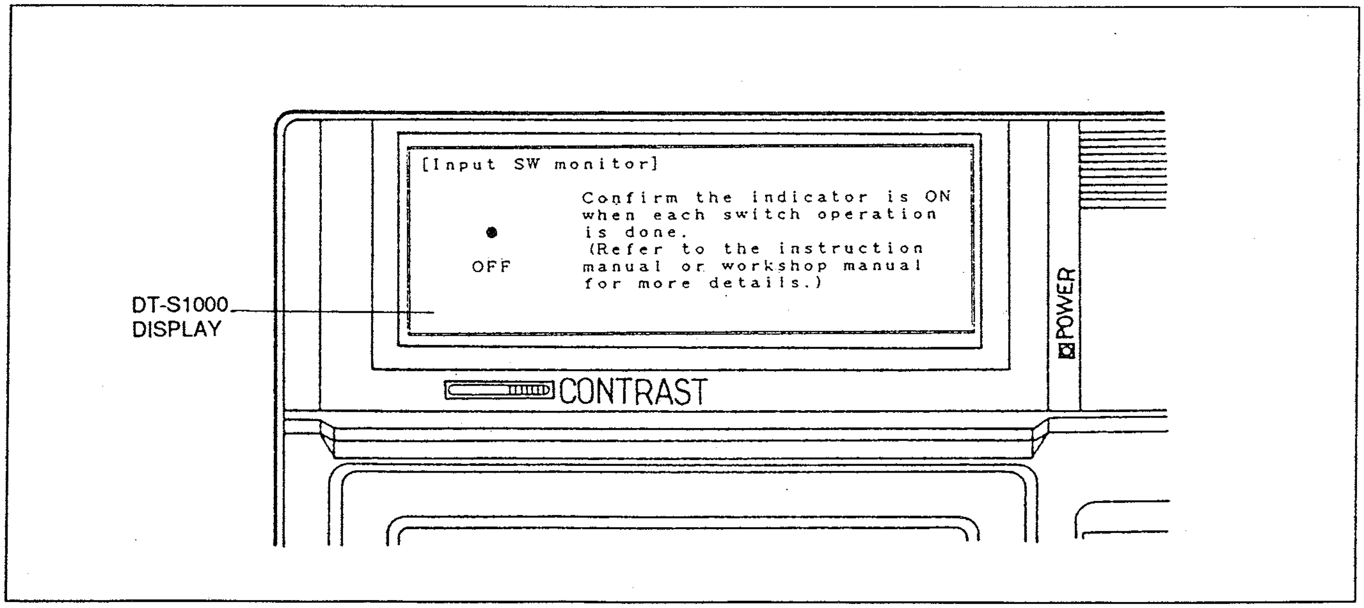
[Input SW monitor]

Confirm the indicator is ON when each switch operation is done.
(Refer to the instruction manual or workshop manual for more details.)

37U0FX-562

Use of Monitor Function (Self-diagnosis checker)

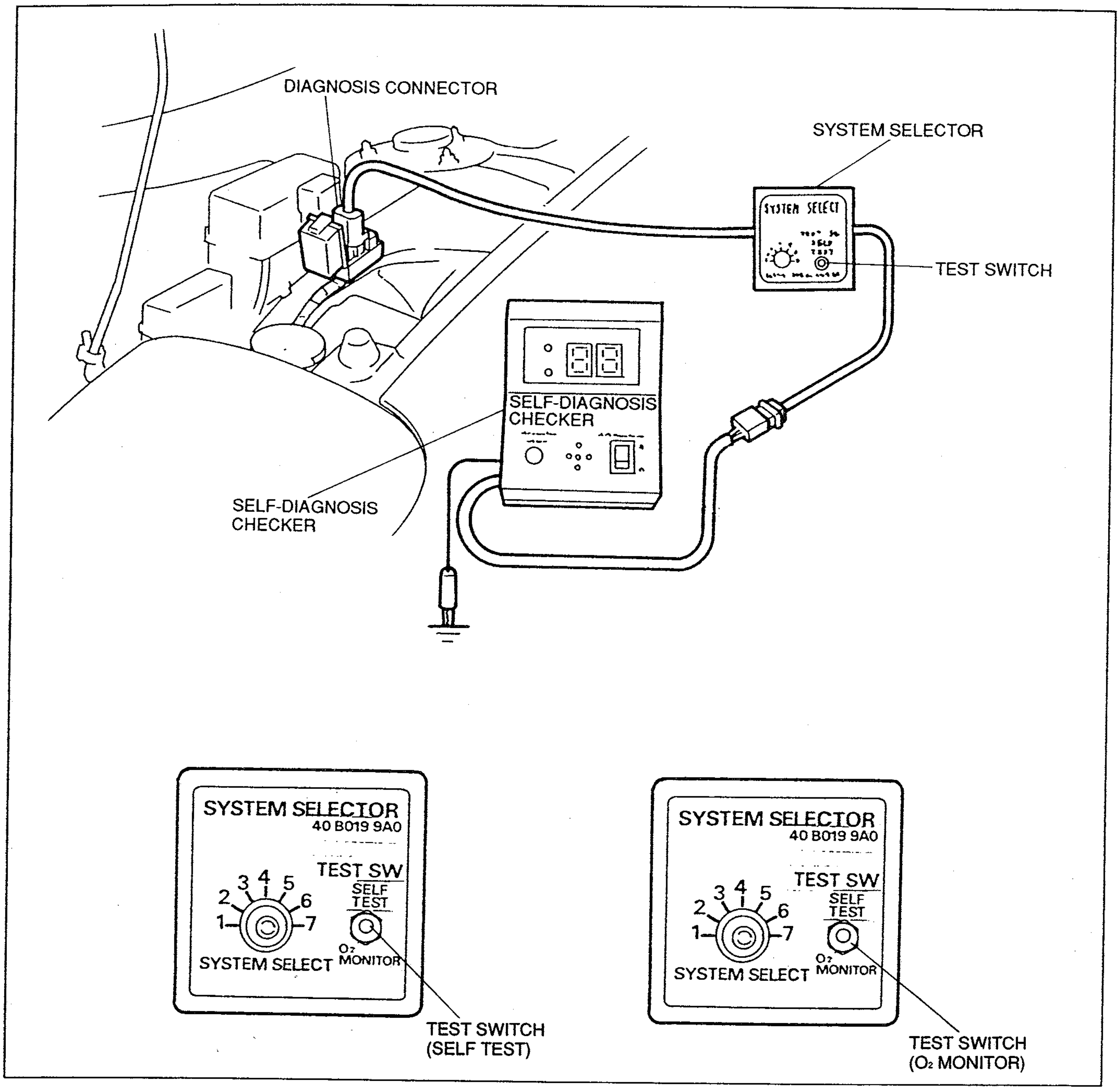

37U0FX-563

Switch monitor and knock sensor monitor operation

1. Connect the System Selector to the diagnosis connector.
2. Set the System Selector test switch to SELF TEST.
3. Connect the Self-Diagnosis Checker to the System Selector.
4. Switch the ignition switch from OFF to ON (engine stopped).
5. Operate the switches as instructed. (Refer to page F–68.) The monitor lamp will show the condition of each switch.
6. Tap the engine hanger lightly with the hammer. The monitor lamp will show the condition.

Oxygen sensor monitor operation

1. Connect the System Selector to the diagnosis connector.
2. Set the System Selector test switch to O_2 MONITOR.
3. Connect the Self-Diagnosis Checker to the System Selector.
4. Start the engine and let it warm up to operating temperature.
5. The flashing of the O_2 monitor lamp will show the feedback operation of the oxygen sensor.

Use of Monitor Function (DT-S1000)

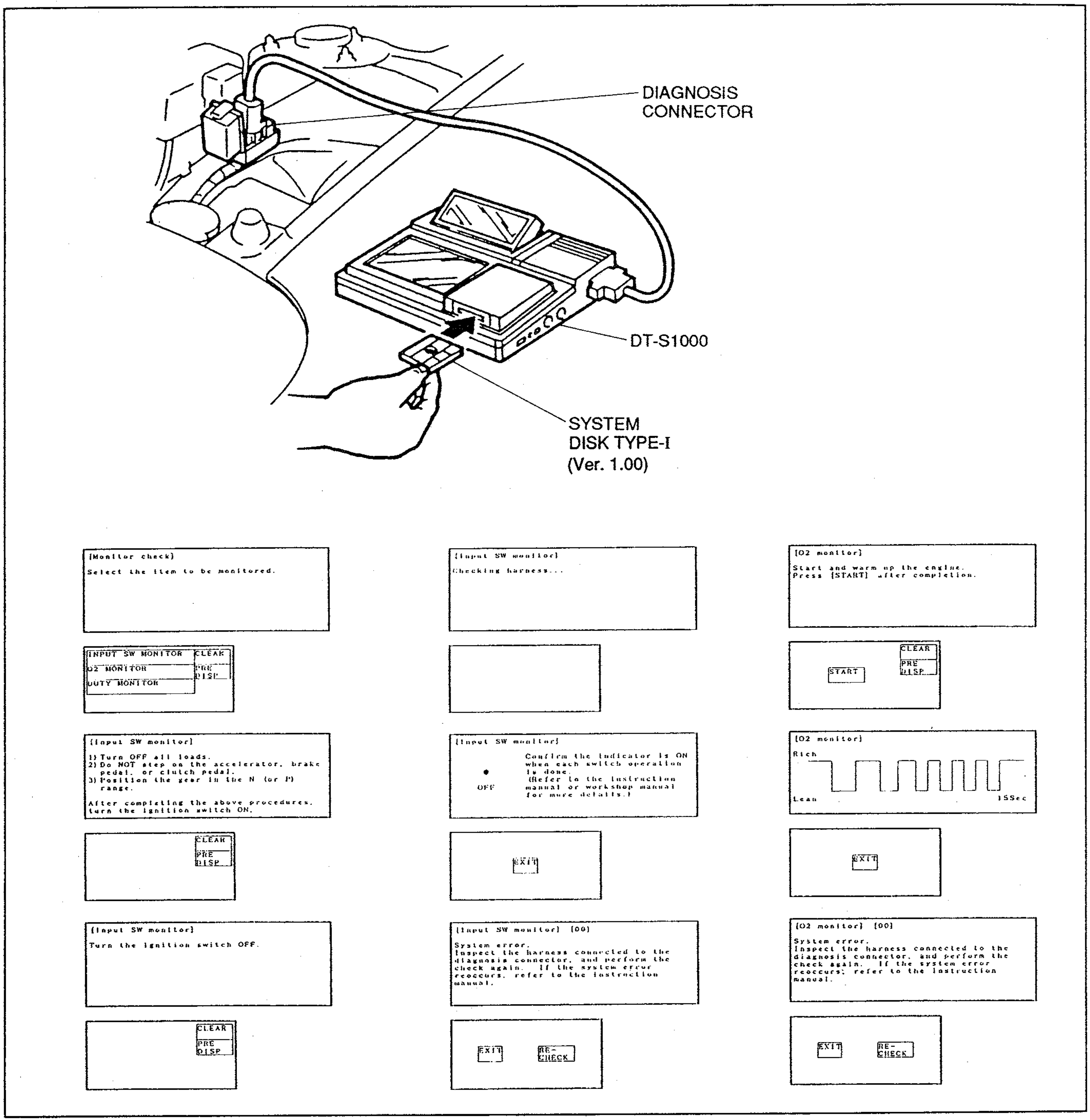

```
[Monitor check]

Select the item to be monitored.
```

```
[Input SW monitor]

1) Turn OFF all loads.
2) Do NOT step on the accelerator, brake
   pedal, or clutch pedal.
3) Position the gear in the N (or P)
   range.

After completing the above procedures,
turn the ignition switch ON.
```

```
[Input SW monitor]

Turn the ignition switch OFF.
```

```
[Input SW monitor]

Checking harness...
```

```
[Input SW monitor]

             Confirm the indicator is ON
             when each switch operation
     ●       is done.
             (Refer to the instruction
    OFF      manual or workshop manual
             for more details.)
```

```
[Input SW monitor]  [00]

System error.
Inspect the harness connected to the
diagnosis connector, and perform the
check again.  If the system error
reoccurs, refer to the instruction
manual.
```

```
[O2 monitor]

Start and warm up the engine.
Press [START] after completion.
```

```
[O2 monitor]  [00]

System error.
Inspect the harness connected to the
diagnosis connector, and perform the
check again.  If the system error
reoccurs; refer to the instruction
manual.
```

37U0FX-564

Switch monitor and knock sensor monitor operation

1. Connect the DT-S1000 and harness to the diagnosis connector.
2. Select the monitor check.
3. Turn the ignition switch from OFF to ON (engine stopped).
4. Operate the switches as instructed. (Refer to page F–68.) The indicator mark will show the condition of each switch.
5. Tap the engine hanger lightly with the hammer. The indication mark will flash.

Oxygen sensor monitor operation

1. Connect the DT-S1000 and harness to the diagnosis connector.
2. Select the O_2 monitor function.
3. Start the engine and let it warm up to operating temperature.
4. The oxygen sensor signal is displayed it as a graph.

REAL TIME MONITOR FUNCTION (DT-S1000)

Individual input output signal can be inspected by the **SST** (DT-S1000).

Signal	Monitor item		Unit	Remark
BASIC	Engine Speed		[rpm]	
	Intake air pressure		[kPa]	
	Throttle opening amount (Narrow range)		[V]	
	Throttle opening amount (Full range)		[V]	
	Engine coolant temperature		[°C]	
	Solenoid valve (ISC)		[%]	Duty control
	Battery voltage		[V]	
	Ignition timing (IGT-L)		[BTDC°]	
	Ignition timing (IGT-T)		[BTDC°]	
	Injector drive signal (Primary)		[m sec]	
	Injector drive signal (Secondary)		[m sec]	
INPUT	Oxygen sensor voltage		[V]	
	Intake air temperature		[°C]	
	Fuel temperature		[°C]	
	Atmospheric pressure		[kPa]	in ECU
	Vehicle speed		[km/h]	
	Metering oil pump (MOP) position		[V]	Target figure
	Metering oil pump (MOP) position sensor		[V]	
	Power steering pressure signal		[ON/OFF]	
	Start signal		[ON/OFF]	
	Brake signal		[ON/OFF]	
	A/C signal		[ON/OFF]	
	Electrical load (E/L) signal		[ON/OFF]	
	Heat hazard signal		[ON/OFF]	
	Canada switch		[ON/OFF]	Canada only
	Daytime running light (DRL) switch signal		[ON/OFF]	Canada only
	California switch		[ON/OFF]	California only
	Exhaust gas recirculation (EGR) switch signal		[ON/OFF]	California only
	Neutral signal		[ON/OFF]	MT only
	Clutch signal		[ON/OFF]	
	1st gear signal		[ON/OFF]	
	2st gear signal		[ON/OFF]	
	Inhibitor signal		[ON/OFF]	AT only
	Reduce torque signal		[ON/OFF]	
	Slip lock-up signal		[ON/OFF]	
	Shift solenoid A signal		[ON/OFF]	
	Shift solenoid B signal		[ON/OFF]	
OUTPUT	Solenoid valve	Turbo precontrol	[%]	Sequential twin turbo-charger control system
		Wastegate control	[%]	
		Purge control	[%]	Duty control
		Charge relief	[ON/OFF]	Sequential twin turbocharger control system
		Charge control	[ON/OFF]	
		Turbo control	[ON/OFF]	
		Switching	[ON/OFF]	Secondary air injection system
		Relief 1	[ON/OFF]	
		Relief 2	[ON/OFF]	
		Port air bypass	[ON/OFF]	
		Split air bypass	[ON/OFF]	
		Pressure regulator control	[ON/OFF]	
		Double throttle control	[ON/OFF]	
		Exhaust gas recirculation	[ON/OFF]	
		Accelerated warm-up system	[ON/OFF]	
	Relay	Electric cooling fan relay	[ON/OFF]	
		A/C relay	[ON/OFF]	
		Air pump relay	[ON/OFF]	
		Fuel pump relay	[ON/OFF]	
	Signal	Torque reduced signal	[ON/OFF]	AT only
		Slip lock up OFF signal	[ON/OFF]	
		Idle signal	[ON/OFF]	

37U0FX-565

Service Data Check (DT-S1000)
Real-time monitor

1. Connect the DT-S1000 and harness to the diagnosis connector.
2. Select the real-time monitor function.
3. Turn the ignition switch ON or start the engine.
4. Select the system to be monitored.
    - ① Basic signals : Signals of frequent use.
    - ② Input signals : Input signals except basic signals.
    - ③ Output signals : Output signals except basic signals.
5. Press return to move the numerical display.
6. The display will show the condition of each signal.
7. When GRAPH is pressed, the graphic display appears.

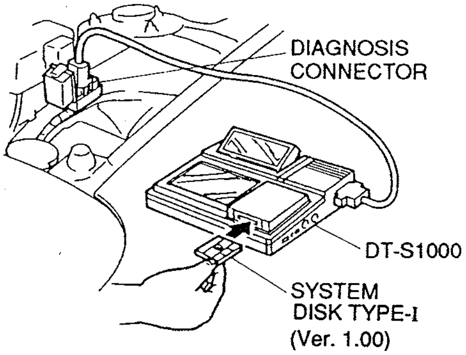

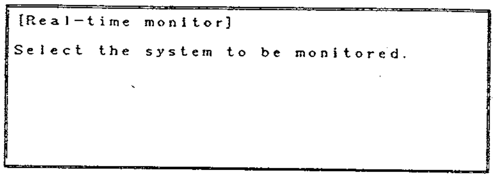

```
[Real-time monitor]
Select the system to be monitored.
```

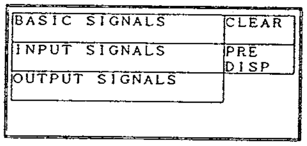

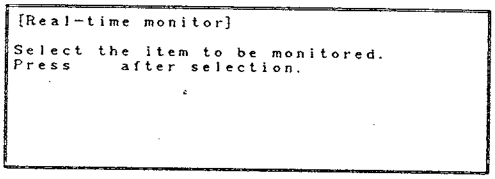

```
[Real-time monitor]
Select the item to be monitored.
Press     after selection.
```

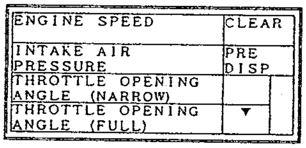

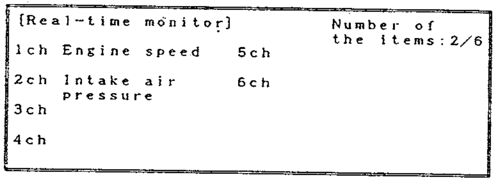

```
[Real-time monitor]                          Number of
                                             the items:2/6
1ch Engine speed        5ch

2ch Intake air          6ch
    pressure
3ch

4ch
```

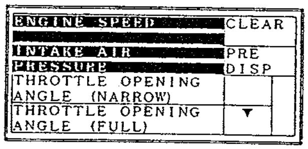

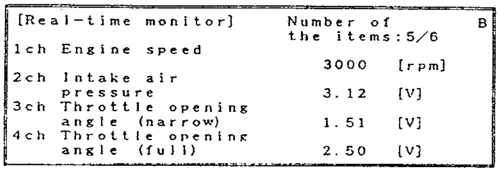

```
[Real-time monitor]          Number of          B
                             the items:5/6
1ch Engine speed
                                3000   [rpm]
2ch Intake air
    pressure                    3.12   [V]
3ch Throttle opening
    angle (narrow)              1.51   [V]
4ch Throttle opening
    angle (full)                2.50   [V]
```

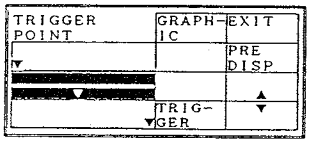

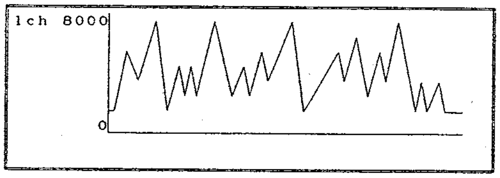

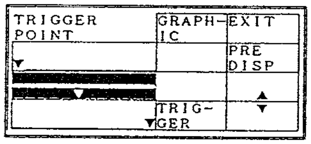

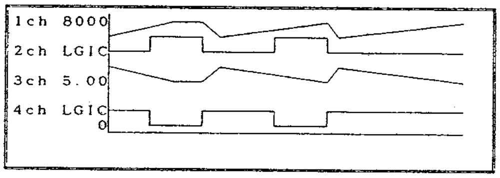

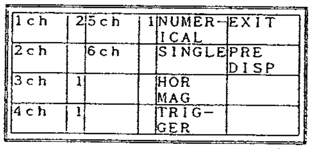

37U0FX-566

SIMULATION FUNCTION (DT-S1000)

- By using the simulation function, the following solenoid valves and relays can by externally driven. This function allows easy system checking.

Check condition	Simulation item	Operation
Ignition switch ON	Solenoid valve (turbo precontrol)	Driven with 50% duty value
	Solenoid valve (wastegate control)	
	Solenoid valve (purge control)	
	Solenoid valve (charge relief)	ON/OFF
	Solenoid valve (charge control)	ON/OFF
	Solenoid valve (turbo control)	ON/OFF
	Solenoid valve (switching)	ON/OFF
	Solenoid valve (relief 1)	ON/OFF
	Solenoid valve (relief 2)	ON/OFF
	Solenoid valve (port air bypass)	ON/OFF
	Solenoid valve (split air bypass)	ON/OFF
	Solenoid valve (pressure regulator control)	ON/OFF
	Solenoid valve (double throttle control)	ON/OFF
	Solenoid valve (exhaust gas recirculation [EGR])	ON/OFF
	Solenoid valve (accelerated warm-up system [AWS])	ON/OFF
	Electric cooling fan relay	ON/OFF
	A/C relay	ON/OFF
	Air pump relay	ON/OFF
	Fuel pump relay	ON/OFF
Idling	Injector (front primary)	Stopped
	Injector (rear primary)	
	Injector (front secondary)	Driven with 1 to 30% increase or decrease injection time
	Injector (rear secondary)	
	Solenoid valve (idle speed control [ISC])	Driven with any duty value
	Solenoid valve (purge control)	
	Solenoid valve (charge control)	ON/OFF
	Solenoid valve (turbo control)	ON/OFF
	Solenoid valve (switching)	ON/OFF
	Solenoid valve (relief 1)	ON/OFF
	Solenoid valve (pressure regulator control)	ON/OFF
	Solenoid valve (double throttle control)	ON/OFF
	Solenoid valve (exhaust gas recirculation [EGR])	ON/OFF
	Solenoid valve (accelerated warm-up system [AWS])	ON/OFF
	A/C relay	ON/OFF
	Air pump relay	ON/OFF

37U0FX-567

Simulation Check (DT-S1000)

1. Connect the DT-S1000 and harness to the diagnosis connector.
2. Select the IG ON TEST or IDLING TEST.
3. Turn ignition switch ON or start the engine.
4. Select the simulation item.
5. Select the simulation method.
6. Press OK to perform simulation.
7. Confirm the engine condition and actuator operating conditions during simulation.

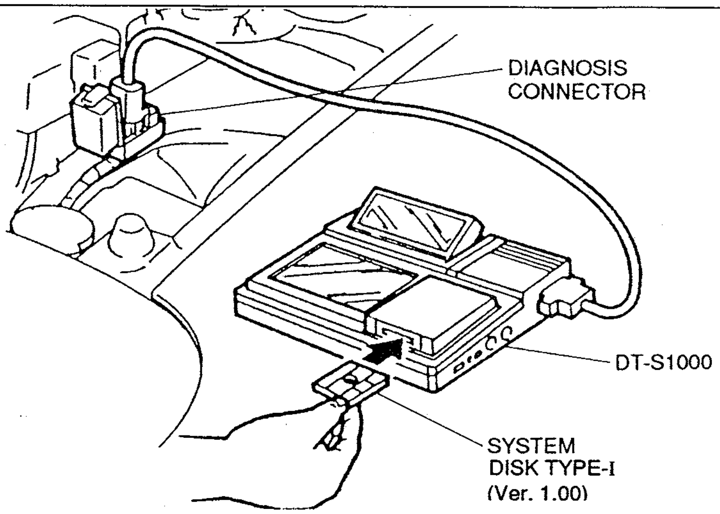

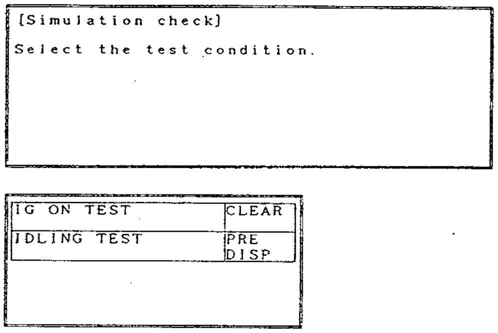
[Simulation check]
Select the test condition.

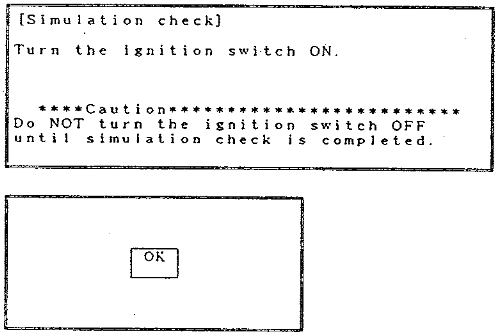
[Simulation check]
Turn the ignition switch ON.

****Caution**************************
Do NOT turn the ignition switch OFF until simulation check is completed.

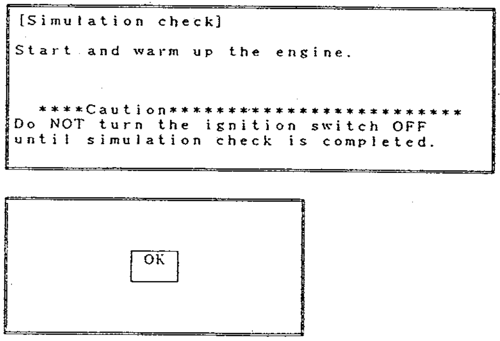
[Simulation check]
Start and warm up the engine.

****Caution**************************
Do NOT turn the ignition switch OFF until simulation check is completed.

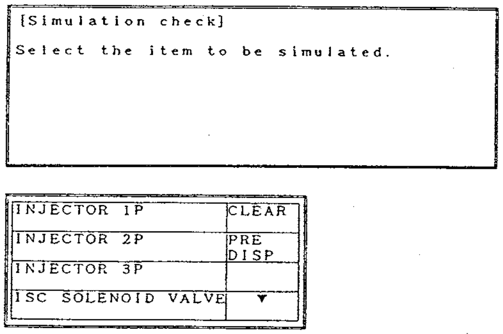
[Simulation check]
Select the item to be simulated.

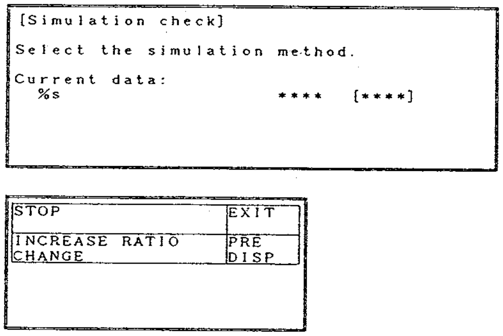
[Simulation check]
Select the simulation method.
Current data:
%s **** [****]

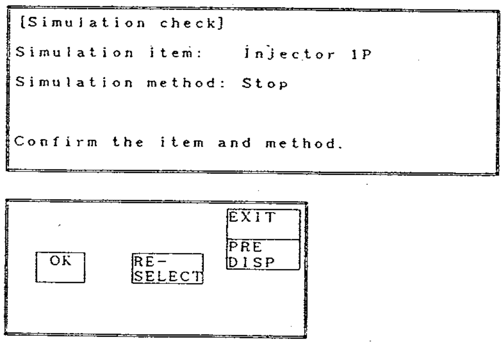
[Simulation check]
Simulation item: Injector 1P
Simulation method: Stop

Confirm the item and method.

37U0FX-568

DIAGNOSIS CONNECTOR

The various connectors for servicing purposes are grouped into the diagnosis connector.

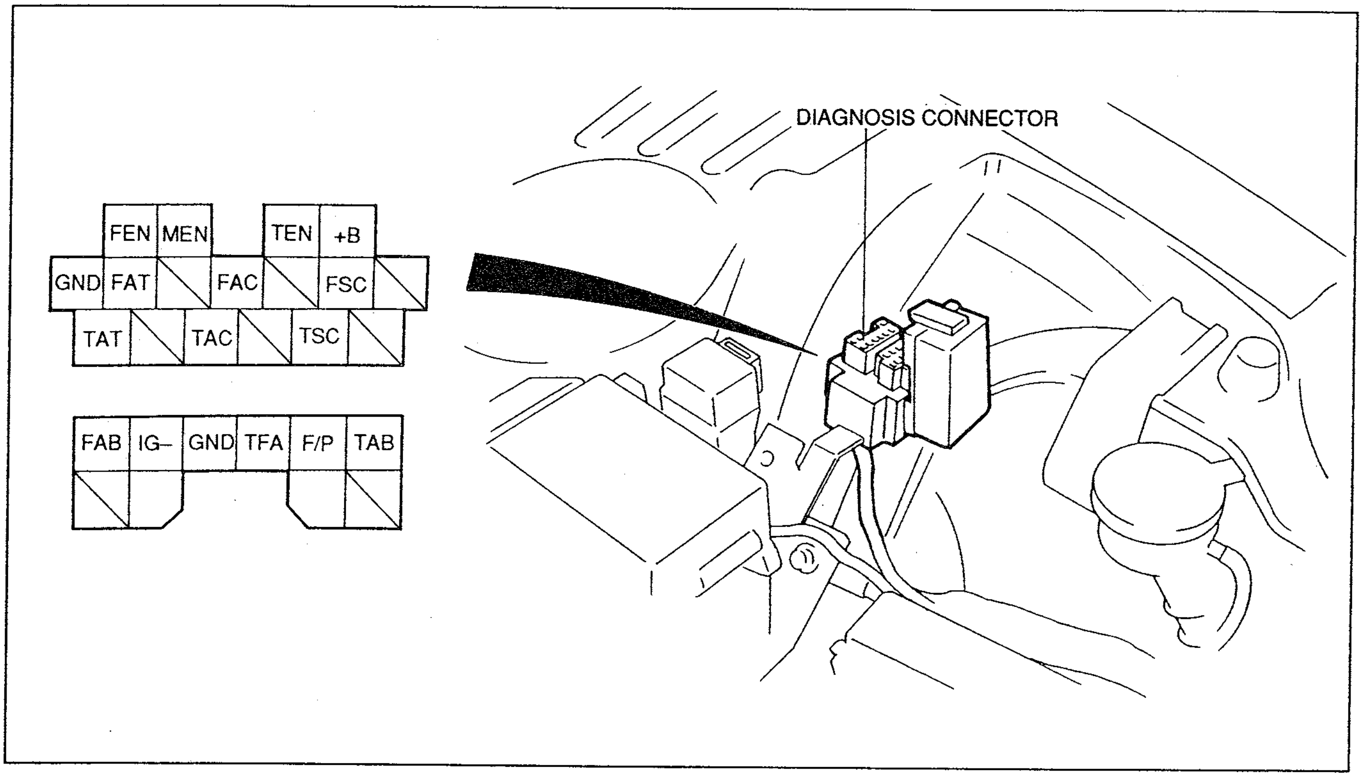

37U0FX-569

The diagnosis connector consists of a 17-terminal connector and an 8-terminal connector. (for various uses).

The following 15 terminals are used.

Terminal	Function	Remark
FEN	For service code number signal from ECU to Self-Diagnosis Checker and DT-S1000	Provides connection for System Selector and Self-Diagnosis Checker and DT-S1000
MEN	For monitor switch signal from ECU to Self-Diagnosis Checker and DT-S1000	
TEN	For test mode signal to ECU	
+B	For battery voltage to Self-Diagnosis Checker and DT-S1000	
GND	Ground	
FAC	For service code number signal from A/C control unit to Self-Diagnosis checker and DT-S1000	
FAT	For service code number signal from EC-AT control unit to Self-Diagnosis checker and DT-S1000	
FSC	For service code number signal from cruise control unit to Self-Diagnosis Checker and DT-S1000 (if equipped)	
TAC	For A/C checking	—
TAT	For EC-AT checking	
TFA	For electric cooling fan checking	
TSC	For control checking (if equipped)	
IG–	For primary ignition pulse	Provides connection for tachometer
GND	Ground	—
F/P	For fuel pump checking	Terminal grounded : Fuel pump operates

Caution

- **Never ground the + B terminal. If grounded, the INJ FUSE (30A) in the main fuse box will be blown.**

Service Terminal

The terminals for fuel pump checking and tachometer connection are incorporated in the diagnosis connector.

Fuel pump checking procedure

If operation of the fuel pump is be checked, ground the **F/P terminal** of the diagnosis connector to activate the fuel pump.

Use of tachometer for servicing

Connect the pickup lead of tachometer to the **IG- terminal** of the diagnosis connector.

1PEOF2-544

BACKUP FUNCTION

The backup function assures vehicle drivability by switching to preset controls in the event of either ECU irregularities or abnormal drop in battery voltage.

Terminal	Connected to	In backup condition	Operation
1D	MEN terminal (diagnosis connector)	ON	Monitor lamp (Self-Diagnosis Checker lights)
1E	MIL (malfunction indicator lamp)	ON	MIL lights
1F	FEN terminal (diagnosis connector)	ON	Display (Self-Diagnosis Checker) flashes 88
1G	Igniter (front trailing side)	Igniter ignites at 5° BTDC	
1H	Igniter (leading side)	Igniter ignites at 5° BTDC	
1J	Igniter (rear trailing side)	Igniter ignites at 5° BTDC	
1K	Fuel pump relay	OFF	Operates fuel pump at low speed
1L	A/C relay	OFF	Stops A/C operation
2C	Lock up off signal (EC-AT CU)	OFF	Prohibits EC-AT lock up (AT)
2D	Atmospheric pressure signal	OFF	Prohibits high altitude correction (AT)
2E	Idle signal	OFF	Prohibits idle line pressure control (AT)
2G	Torque reduced signal	OFF	Prohibits torque reduction control (AT)
2J	Air pump relay	OFF	Stops air pump operation
3D	Electric cooling fan relay	ON	Operates electric cooling fan relay
3H	Solenoid valve (purge control)	OFF	Solenoid valve completely closed
3K	Solenoid valve (relief2)	OFF	Closes relief passage
3N	Solenoid valve (port air bypass)	OFF	Closes port bypass passage
3O	Solenoid valve (double throttle control)	OFF	Stops double throttle control
3P	Solenoid valve (relief1)	ON	Closes relief passage
4F	Solenoid valve (split air bypass)	OFF	Closes main passage
4I	Metering oil pump (MOP) stepping motor	OFF	Fixes blow off amount at preset level
4J			
4K			
4L			
4M	Solenoid valve (PRC)	ON	Prohibits pressure regulator control
4N	Solenoid valve (switching)	ON	Closes port air passage
4O	Solenoid valve (EGR)	OFF	Prohibits EGR operation
4P	Solenoid valve (AWS)	OFF	Prohibits accelerated warm up system
4Q	Solenoid valve (ISC)	OFF	Solenoid valve completely closed
4R	Solenoid valve (turbo control)	OFF	Closes exhaust passage to secondary turbocharger
4S	Solenoid valve (charge relief)	OFF	Closes relief passage to air cleaner
4T	Solenoid valve (charge control)	ON	Closes boost air passage of secondary turbocharger
4U	Solenoid valve (wastegate control)	OFF	Opens wastegate valve
4V	Solenoid valve (turbo precontrol)	OFF	Opens turbo precontrol valve
4W	Front primary injector	Fixes fuel injection amount and injects in front and rear chamber simultaneously	
4Y	Rear primary injector		
4X	Front secondary injector	Stops fuel injection	
4Z	Rear secondary injector		

37U0FX-570

SERVICE POINTS

Engine Signal Monitor

For easy troubleshooting of the EGI control system, the **Engine Signal Monitor** is required. When inspecting the ECU terminal voltage, use the **Engine Signal Monitor** (49 9200 162) **Sheet** (49 F018 903) and **Adapter Harness** (49 F018 902).

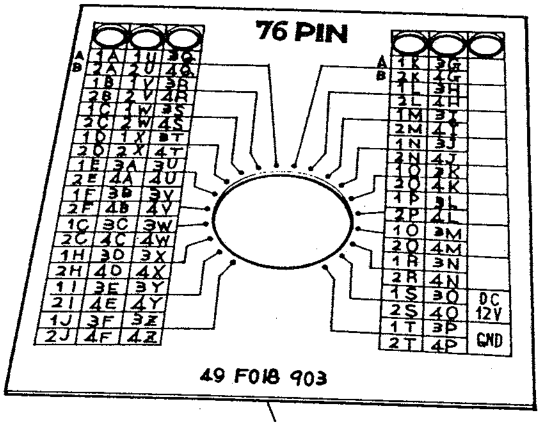

49 F018 903

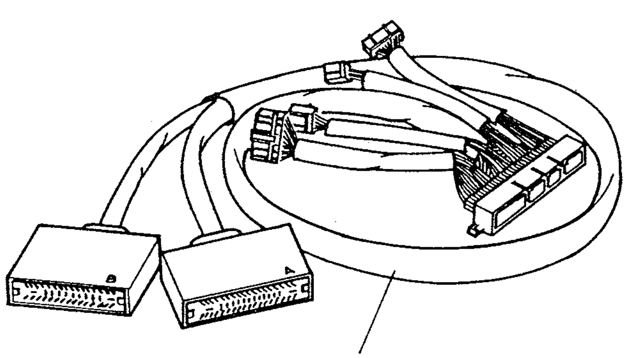

49 F018 902

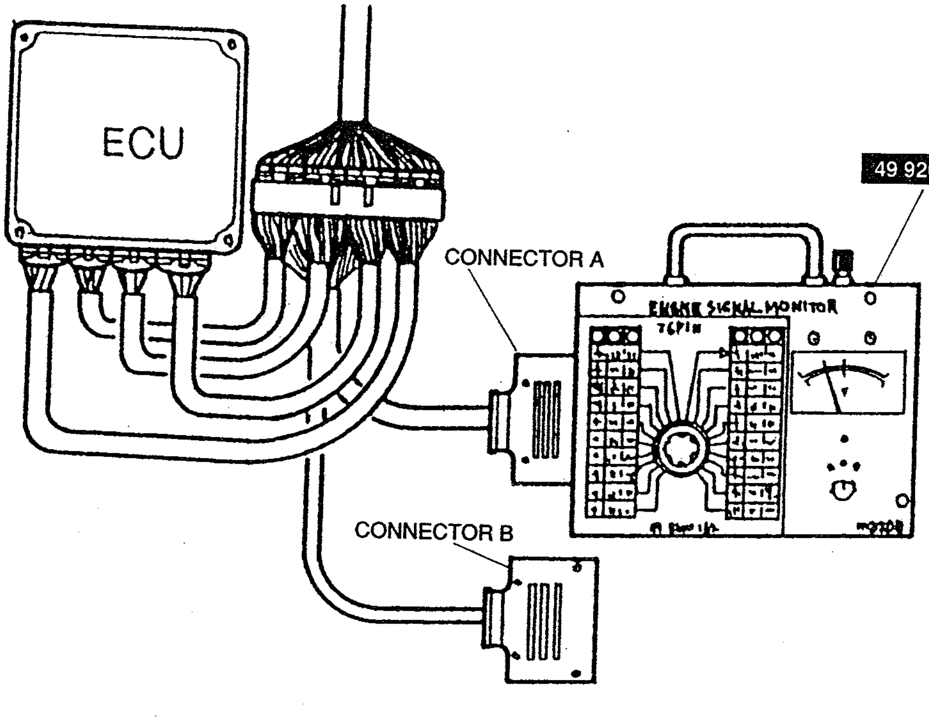

NOTE

- **USE CONNECTOR A OF THE ADAPTOR TO MEASURE VOLTAGE AT TERMINALS 1A THOUGH 1V AND 3A THOUGH 3P, AND USE CONNECTOR B TO MEASURE VOLTAGE AT TERMINALS 2A THOUGH 2L, AND 4A THOUGH 4Z.**

37U0FX-571

ENGINE ELECTRICAL SYSTEM

37U0GX-501

OUTLINE

- A reduction starter is used in AT vehicle to improve starting ability.
- The spark plugs use a platinum center electrode to improve ignition performance and spark plug reliability.

37U0GX-502

FEATURES

Excellent drivability and low fuel consumption	Electronic spark advance (ESA) system
Improved starting	High-torque reduction starter (AT)
Improved reliability	Alternator with warning function
	Battery box and cooling duct
Enhanced spark plug performance	Platinum electrode spark plug

37U0GX-503

STRUCTURAL VIEW

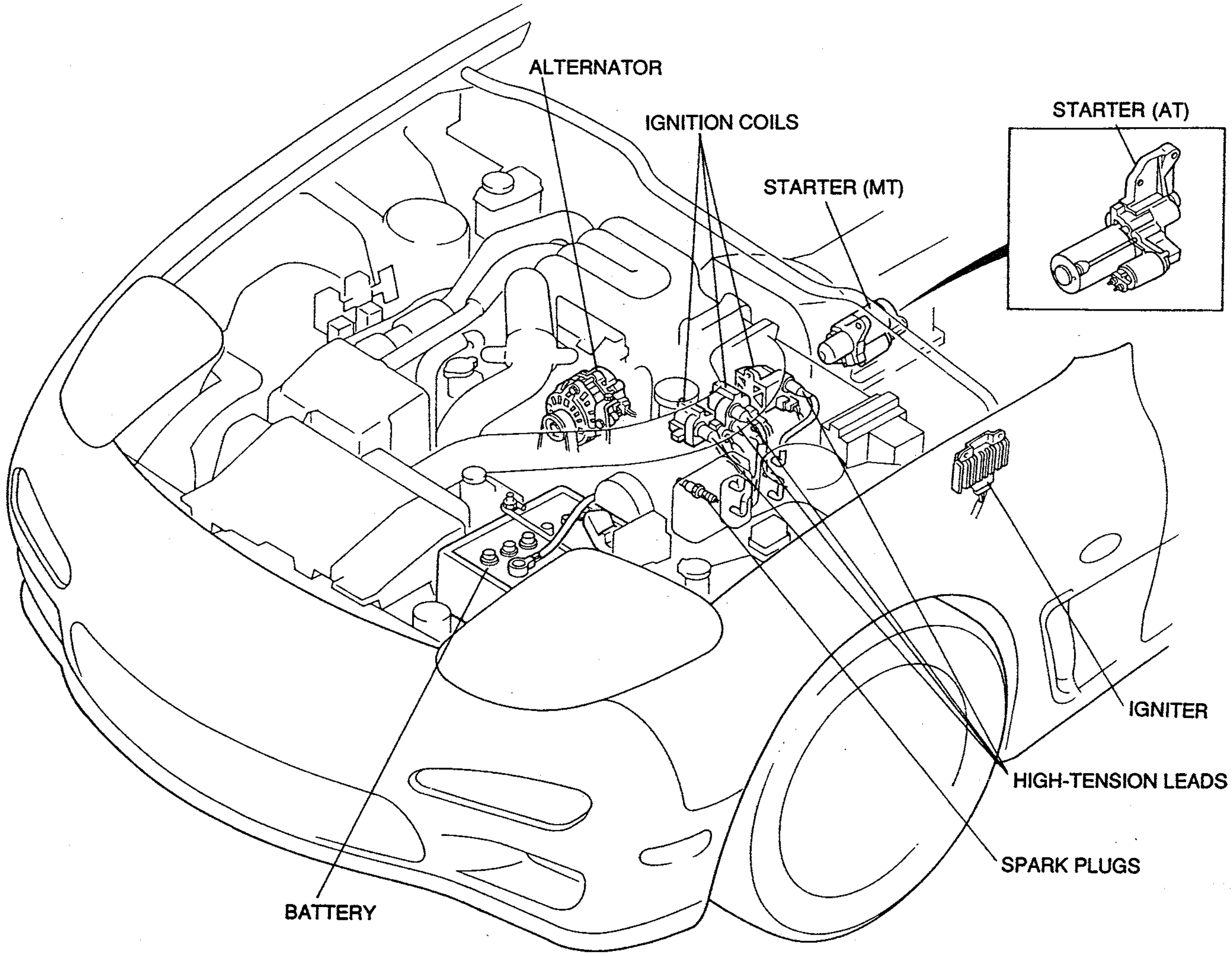

37U0GX-504

SPECIFICATIONS

Transmission Item				MT	AT
Voltage V				12, Negative ground	
Battery	Type and capacity (20-hour rate) (Maintenance free)			55D23L (60Ah) 65D23L (55Ah)*1	55D23L (60Ah) 75D26L (65Ah)*1
Ignition system	Distribution			Control unit	
	Spark timing (TEN terminal grounded or system selector connected)			Leading: ATDC 5° (BTDC –5°) Trailing : ATDC 20° (BTDC–20°)	
	Spark advance			Control unit	
	Spark plug	Type	L side	NGK BUR7EQP*2 *3, BUR6EQP*3, BUR7EQ, BUR6EQ	
			T side	NGK BUR9EQP*2 *3, BUR8EQP*3, BUR9EQ, BUR8EQ	
		Plug gap mm {in}		1.1—1.7 {0.043—0.067}	
Alternator	Output V-A			12-100	
	Regulated voltage V			14.1—14.7 (with temperature—gradient characteristics)	
	Brush length	Standard mm {in}		21.5 {0.847}	
		Wear limit mm {in}		8.0 {0.315}	
Starter	Type			Direct	Reduction
	Output kW			1.2	2.0
	Output (No load)	Voltage V		11.0	
		Current A		Max. 90	
		Speed rpm		Min. 3,000	Min. 2,200
	Brush length	Standard mm {in}		17.5 {0.689}	18.0 {0.709}
		Wear limit mm {in}		12.0 {0.472}	11.0 {0.433}

37U0GX-505

*1 Cold-weather areas
*2 Standard plug
*3 Platinum plug

CHARGING SYSTEM

BATTERY

- When the vehicle is moving, air passes through the battery cooling duct and box to cool the battery.

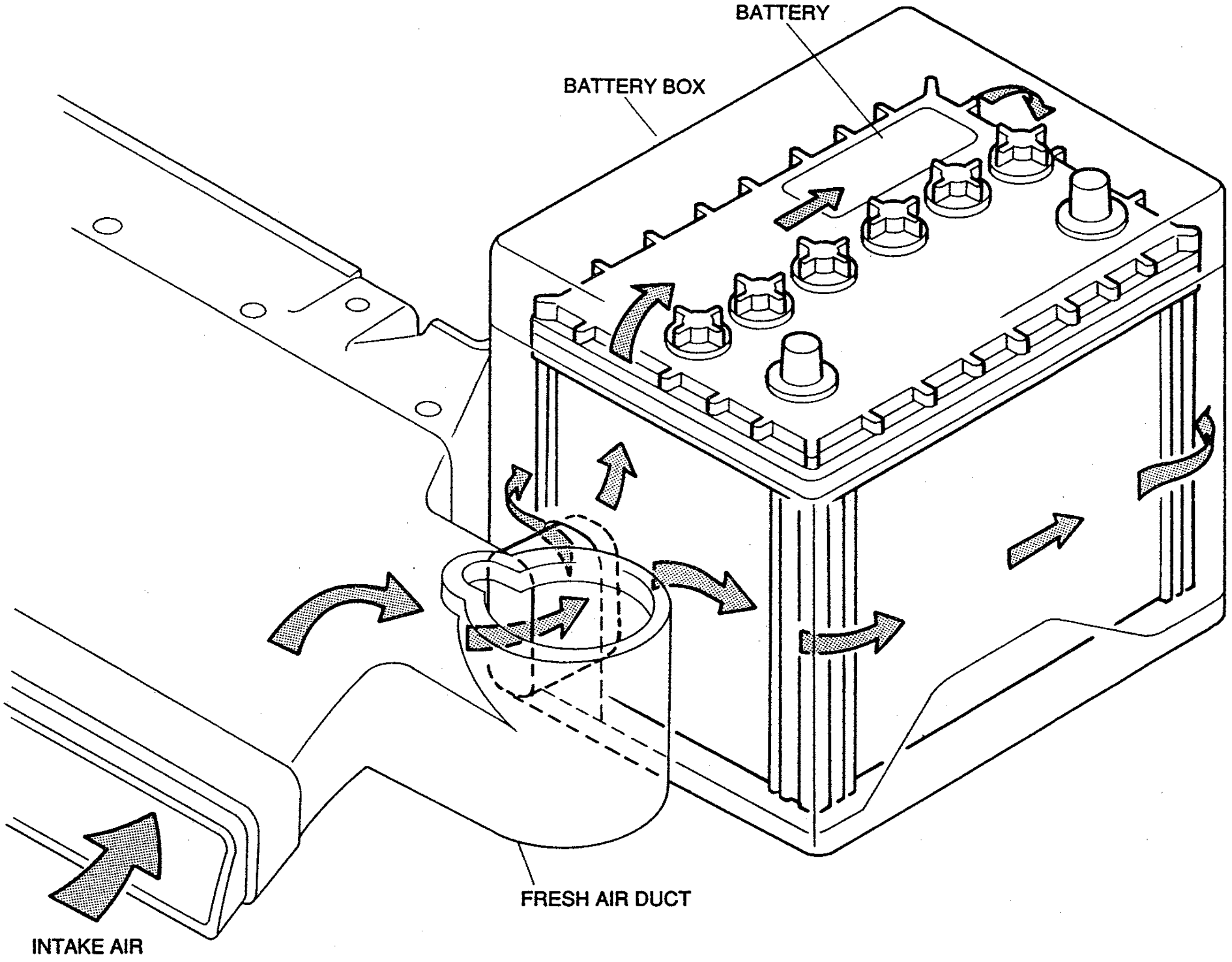

37U0GX-506

ALTERNATOR

- The IC regulator has a temperature compensation characteristic which reduces the alternator output voltage when the ambient temperature increases so that the battery charge is maintained at the ideal level.
- Belt slippage is restricted by the use of a multiribbed belt and pulleys.

Self-Diagnosis System

- If one of the following failures occurs, the alternator warning lamp the instrument cluster will illuminate, informing the driver of a malfunction.
  1. Terminal S circuit open
  2. Terminal B circuit open
  3. Field coil circuit open
  4. No voltage output
  5. Voltage output excessive (approx. 16.2V or more)

Structural View

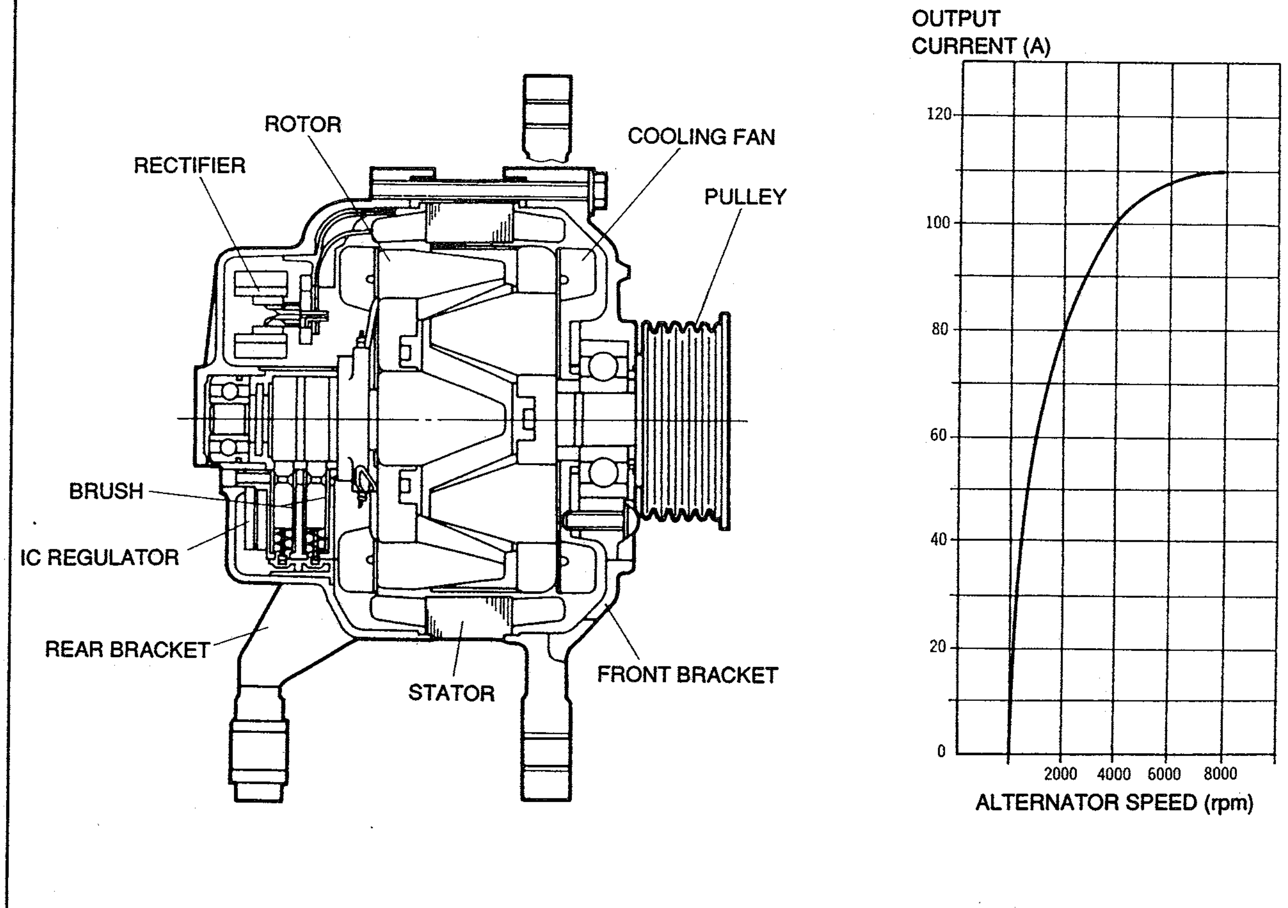

37U0TX-507

STARTING SYSTEM

STARTER

- Vehicles with an automatic transmission are equipped with a high-torque reduction starter to ease starting.

Structural View

MT

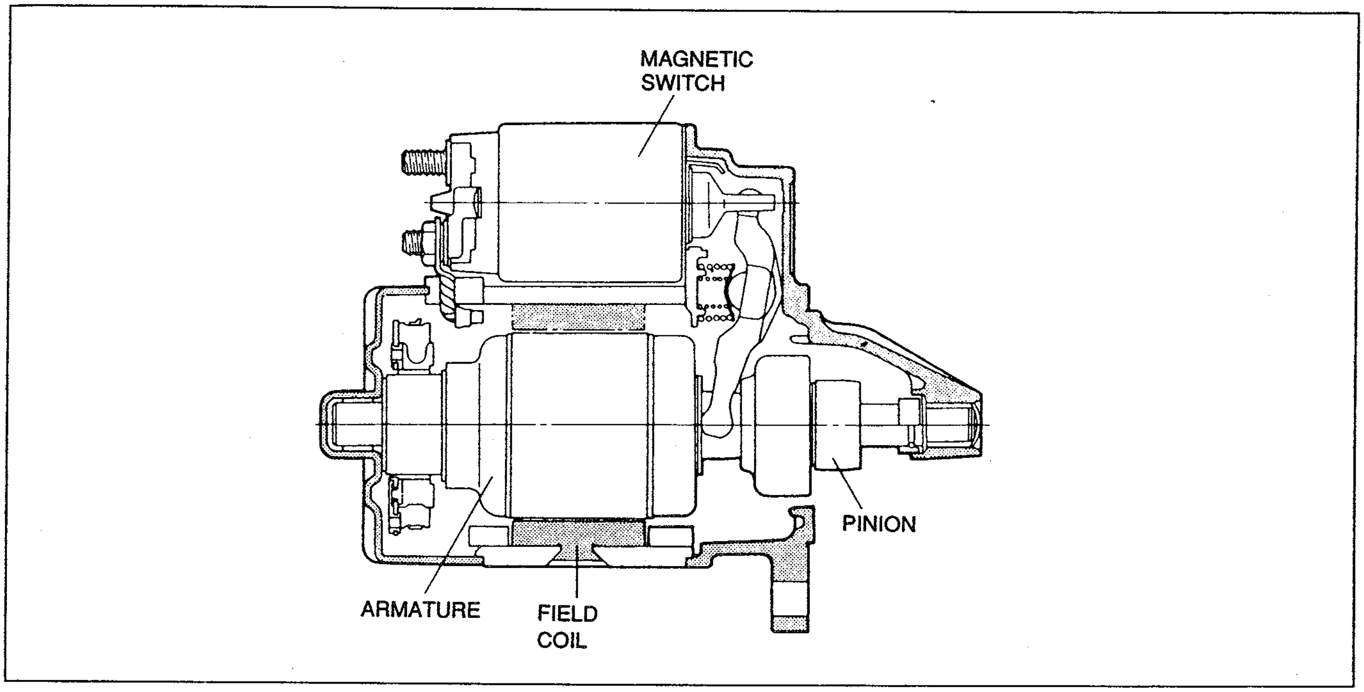

37U0GX-508

AT

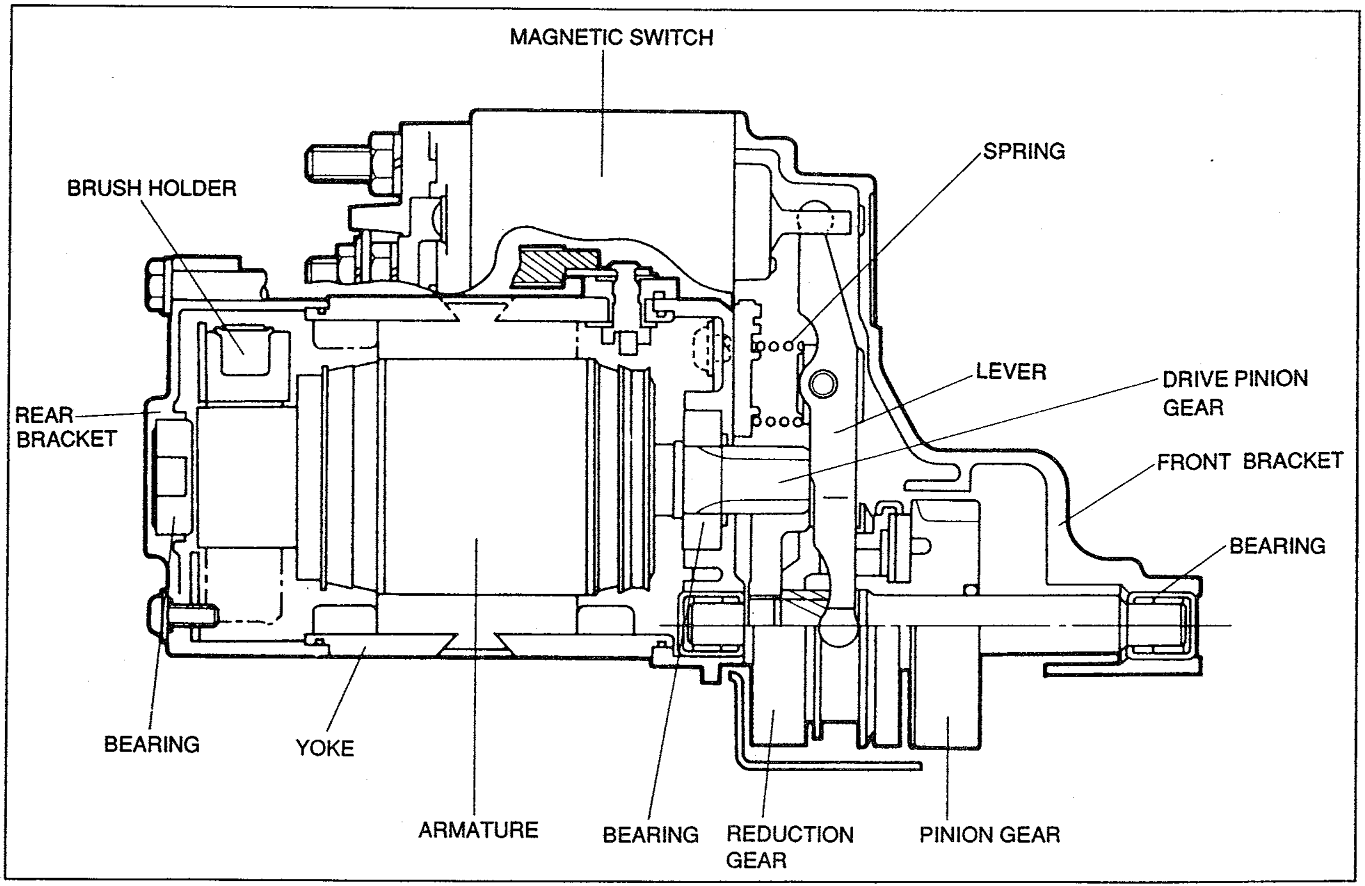

37U0GX-509

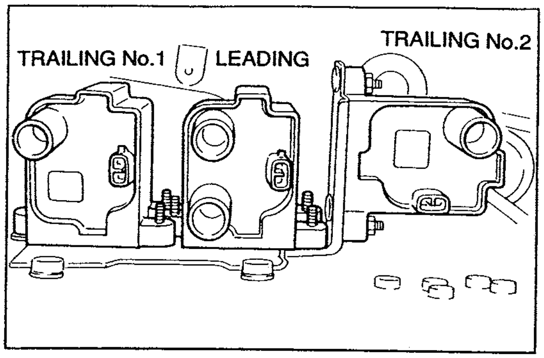

37U0GX-510

IGNITION SYSTEM

IGNITION COIL

- The ignition coil increases the voltage of the primary ignition signal input from the igniter and sends the signal to the spark plugs as secondary voltage. There are three ignition coils: trailing No.1, trailing No.2, and leading.

Resistance (Standard)

	Primary coil	Secondary coil
T (trailing) side	1.0Ω or less	—
L (leading) side	1.0Ω or less	12.5—15.5Ω

CIRCUIT DIAGRAM

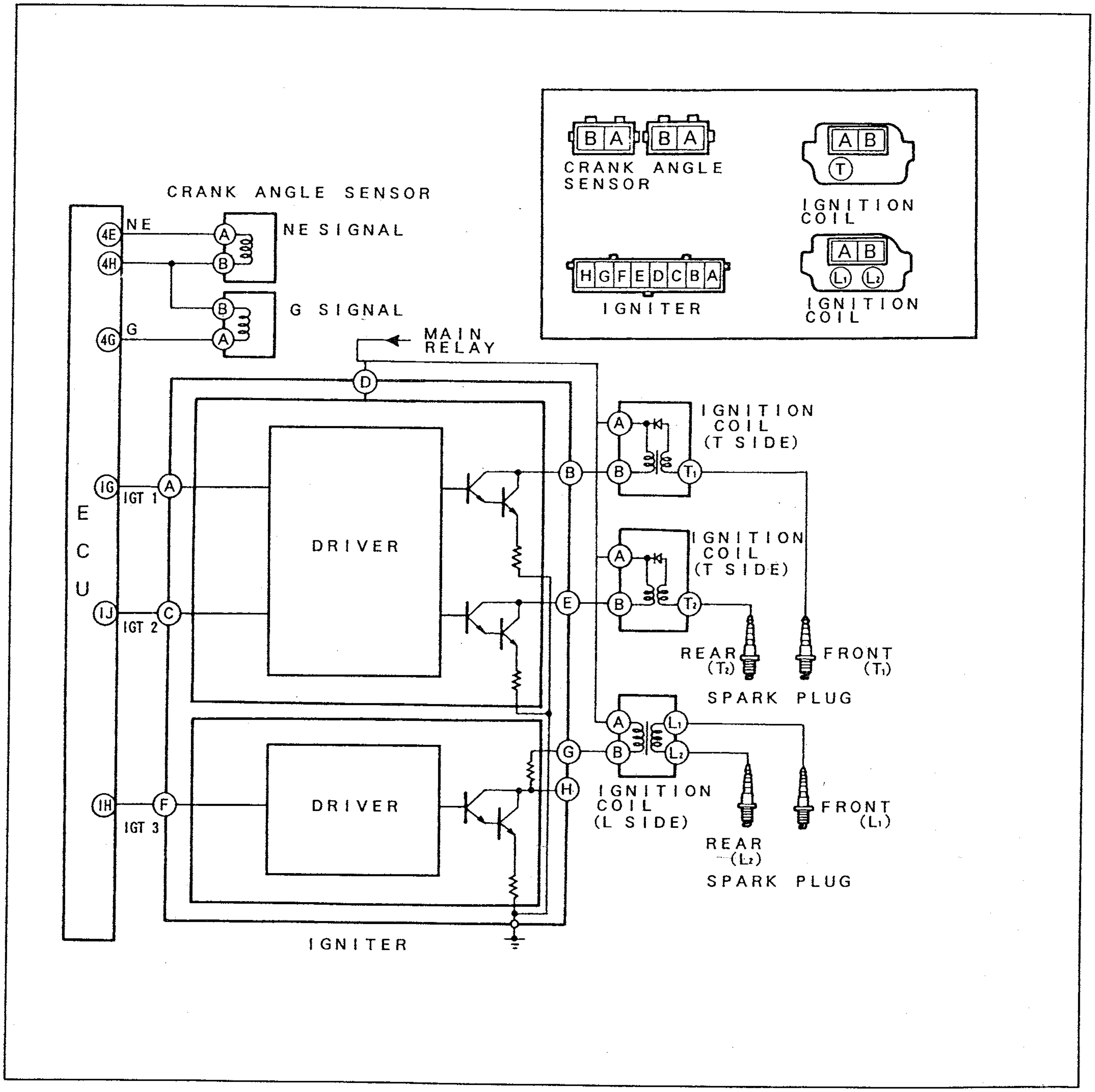

37U0GX-511

SPARK PLUGS

- Surface discharge type spark plugs are used on both the L (leading) and T (trailing) sides.
- The spark plugs have a platinum center electrode to improve ignition performance and spark plug reliability.

Features

- Because the spark jumps to any portion of the circular side electrodes, the electrodes wear less, improving durability.
- Resistor spark plugs are used to eliminate electrical noise generated by the ignition system and reduce static in the audio system.
- The slots between the side electrodes help to prevent spark plug fouling.

Structural View

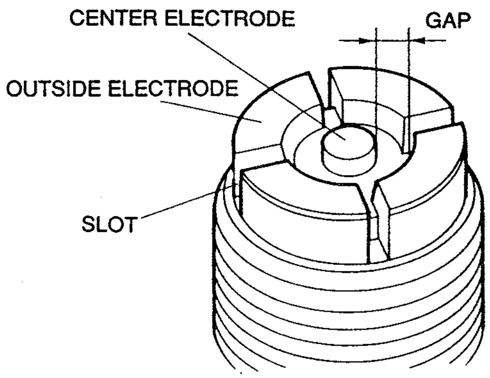

37U0GX-512

CLUTCH

37U0HX-501

OUTLINE

- The clutch mechanism is a dry, single-disc, hydraulically-controlled unit that uses a diaphragm spring.
- The clutch pedal has a turn-over-type assist spring for lighter and easier clutch pedal application.
- The clutch pedal uses a bracket separate from that of the brake pedal, making the clutch pedal assembly smaller, lighter, and easier to service.
- The clutch cover is a newly-developed pull type.

37U0HX-502

FEATURES

Reduced size and weight	Brakes and clutch share the same reservoir	H–4
	Clutch pedal has its own separate bracket	H–4
	Clutch pedal uses a turn-over-type assist spring	H–5
Improved serviceability	Adjustment-free clutch release cylinder is adopted	H–4
	Clutch pedal has its own separate bracket	H–4
Reduced noise and vibration	Clutch pedal bracket and dashpanel are spaced slightly apart from each other	H–4
Improved operability	Clutch pedal uses a turn-over type assist spring	H–5
	Clutch cover is a pull type unit	H–8

37U0HX-503

STRUCTURAL VIEW

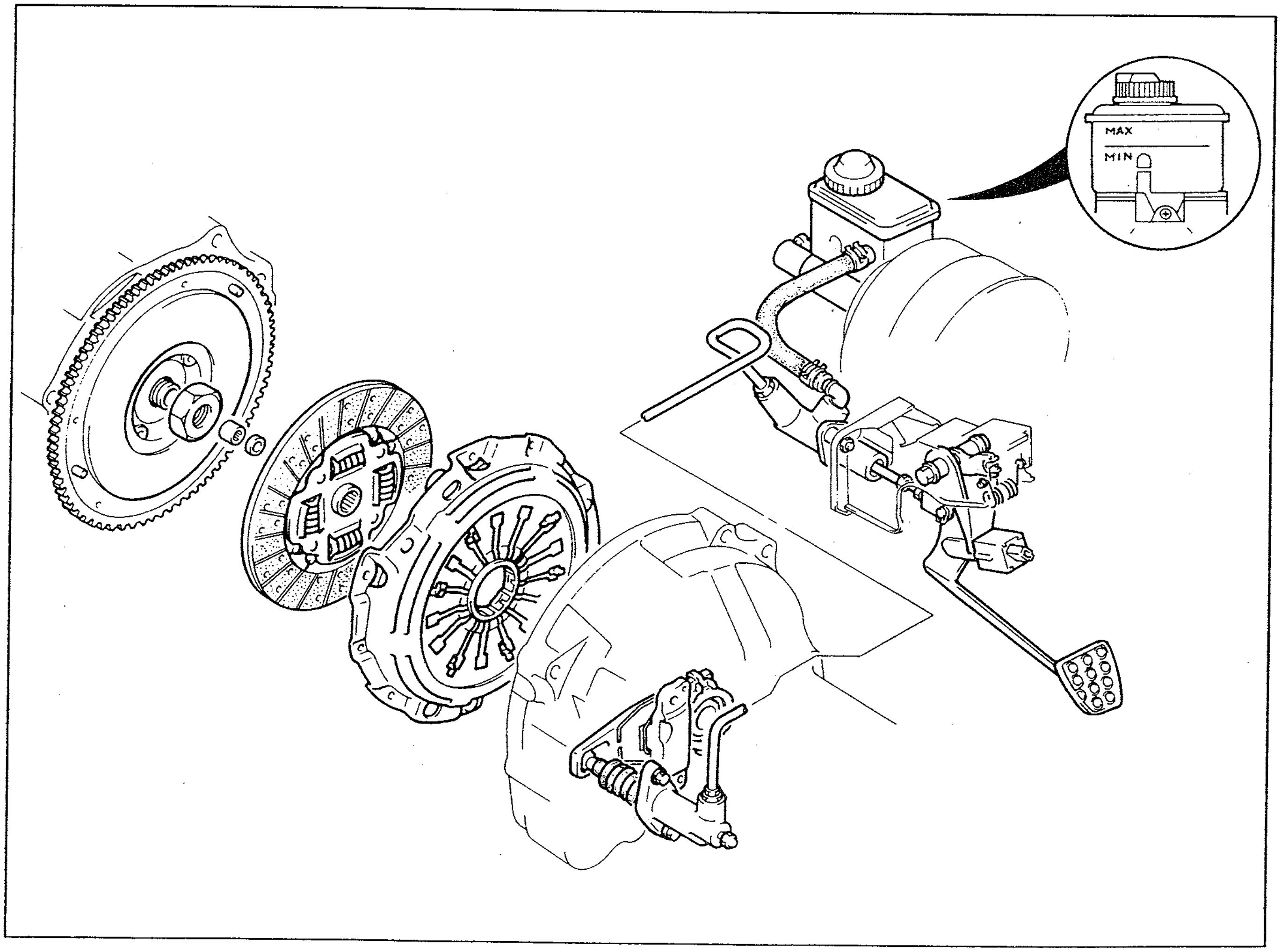

37U0HX-504

CROSS-SECTIONAL VIEW

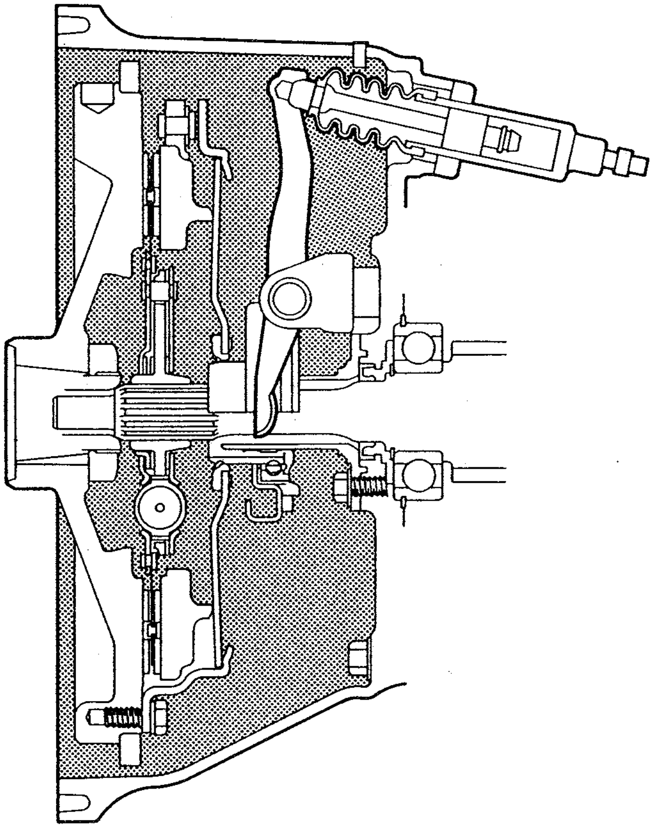

37U0HX-505

SPECIFICATIONS

Item		Engine/Transmission	13B Turbo
			R15M-D (R5M-D)
Clutch	Type		Dry, single-disc diaphragm
	Control		Hydraulic
Clutch pedal	Type		Suspended
	Pedal ratio		6.35
	Full stroke mm {in}		135 {5.32}
	Height (pedal surface carpet) mm {in}		169.5—181.0 {6.67—7.13}
Clutch disc	Outer diameter × inner diameter mm {in}		236 × 160 {9.29 × 6.30}
	Thickness	Flywheel side mm {in}	3.5 {0.14}
		Pressure plate side mm {in}	3.5 {0.14}
	Total friction area cm² {in²}		236 {36.6}
	Thickness when free mm {in}		8.2 {0.32}
	Material		Semi molding
Clutch cover	Type		Pull
	Set load N {kgf, lbf}		7,220 {736, 1,619}
Clutch master cylinder	Type		Conventional
	Inner diameter mm {in}		15.87 {0.625}
Clutch release cylinder	Type		Adjustment-free
	Inner diameter mm{in}		19.05 {0.750}
Fluid	Type		FMVSS116, DOT-3

37U0HX-506

CLUTCH CONTROL

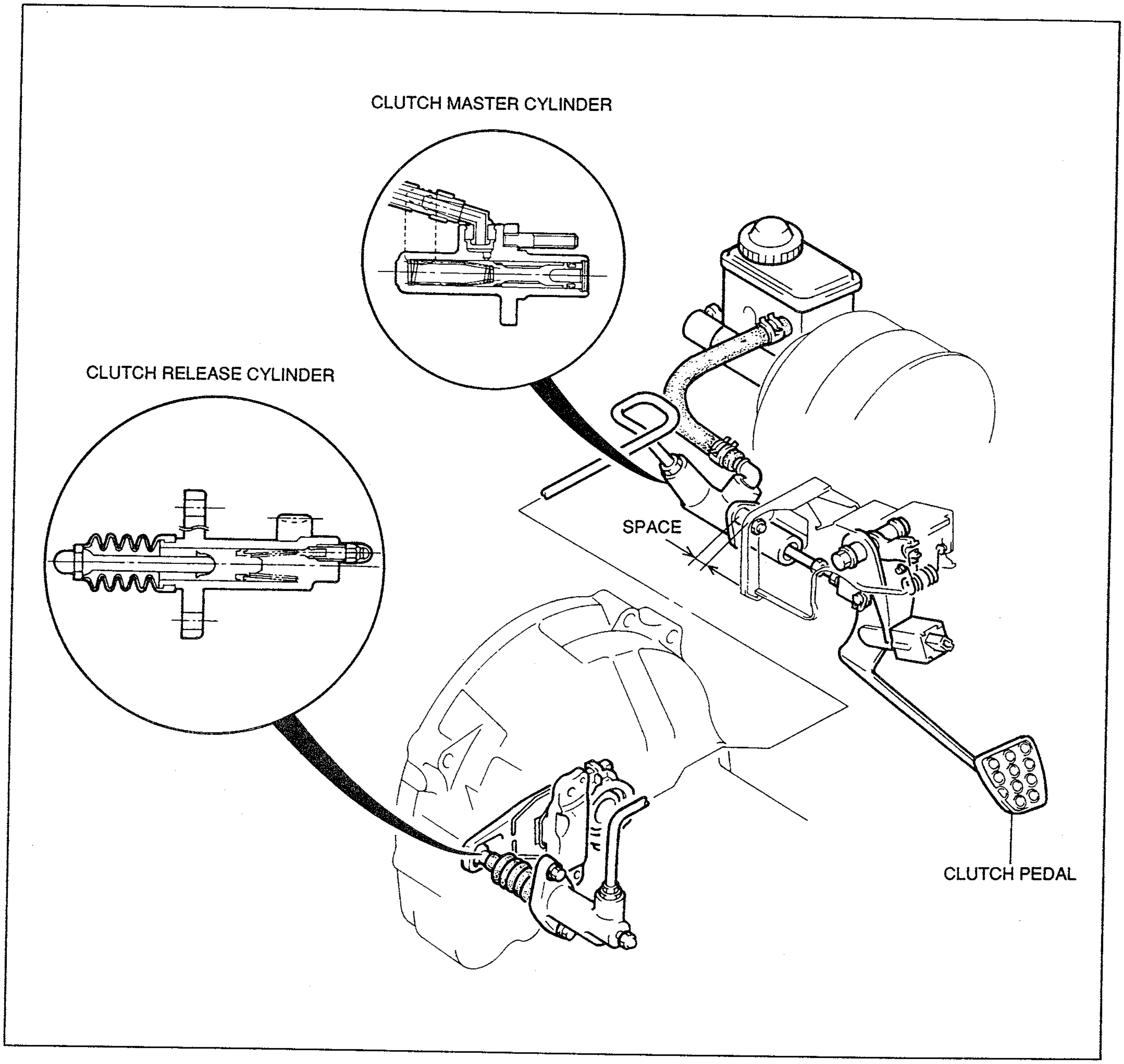

37U0HX-507

CLUTCH MASTER CYLINDER

- A conventional clutch master cylinder is used.
- A common reservoir is used by the brakes and clutch to reduce weight and number of parts.

CLUTCH RELEASE CYLINDER

- The clutch release cylinder contains a conical spring to maintain pushrod-end free play at zero for maintenance-free operation.
- The release cylinder is installed at the rear of the clutch housing to allow for use of a pull-type clutch.

CLUTCH PEDAL

- The clutch pedal assembly uses a separate bracket, and is thus smaller and lighter.
- The entire clutch pedal assembly can be removed, improving serviceability.
- Noise and vibration are reduced by a buffer space between the clutch master cylinder bracket and the dashpanel.
- Larger pedal bracket spacers reduce floor panel contact pressure, prevent against a drop in tightening torque, and at the same time make insertion of the master cylinder stud bolts easier.

ASSIST SPRING

- The clutch pedal uses a small, lightweight, turn-over-type assist spring to make pedal application pressure easier.

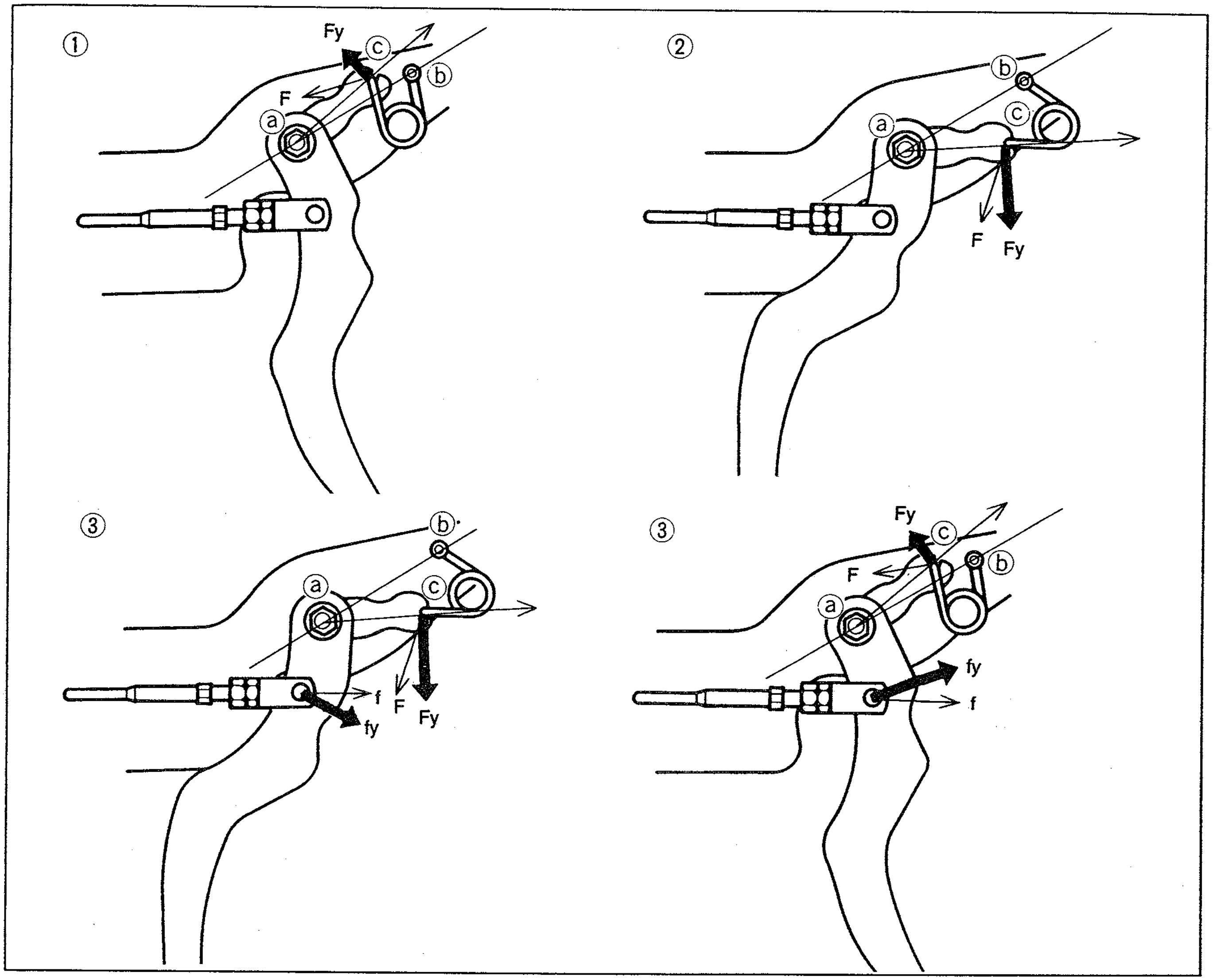

37U0HX-508

Explanation of Mechanism

1. Clutch pedal at resting position

The spring is under pressure when the clutch pedal stroke is still at zero inches. Force F trying to expand the spring acts on pivot point C. Force Fy is also acting on pivot point C, but in another direction, against pedal forward movement. This keeps the pedal from moving forward by itself.

2. Clutch pedal pressed

Pressing the clutch pedal rotates pivot point A rightward. Force Fy acts against pedal forward movement as long as the line that joins pivot points A and B is not passed by pivot point C. This combination of forces gives the pedal an elastic feeling when first pressed. When pivot point C passes the line between pivot points A and B, force Fy starts to work in the same direction as force F. This helps the driver press the pedal easier.

3. Clutch pedal released

When the clutch pedal is released, the clutch master cylinder pushrod exerts a counter force f on the pedal, and the fy component of that force acts against the clutch pedal's forward motion. Force fy becomes greater than the force Fy, and forces the pedal pivot point A to rotate leftward. When pivot point C returns past the line that joins pivot points A and B, the counter force fy from the master cylinder pushrod gains momentum. Force Fy now works in the same direction as the clutch pedal's backward momentum, thus returning the clutch pedal to its resting position.

CLUTCH UNIT

CLUTCH RELEASE FORK

- A cast iron clutch release fork is used for greater strength.
- The clutch release fork is held firmly to a cast iron support by an iron shaft, allowing for use of a pull-type clutch.
- A return spring is installed to the release fork assembly, thus keeping the release collar from returning too far through the clutch cover.

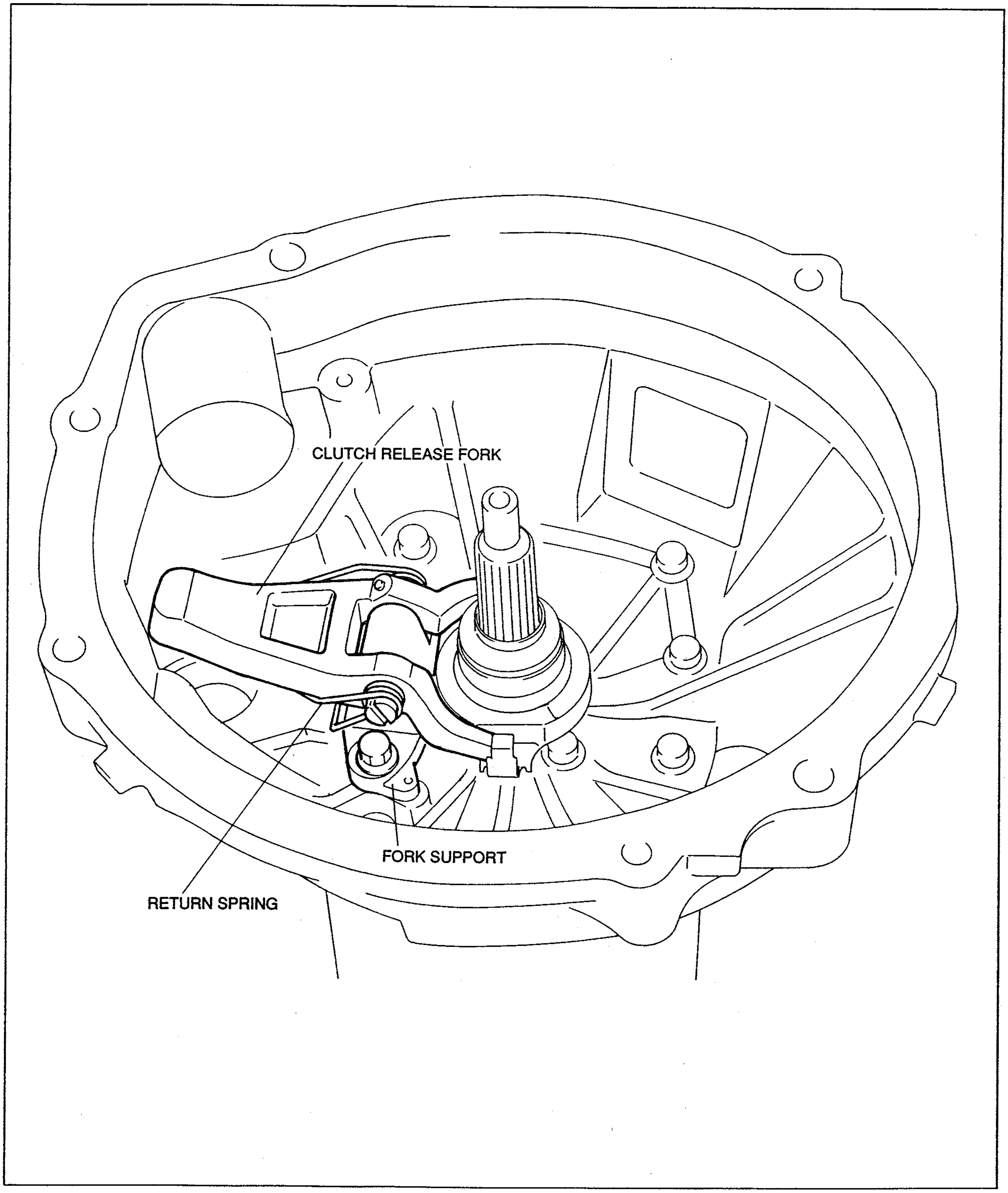

CLUTCH RELEASE COLLAR

- The clutch release collar uses a self-adjusting bearing to reduce noise and vibration.
- The release collar slots fit over the tips of the release fork, and the release collar is installed to the diaphragm spring.

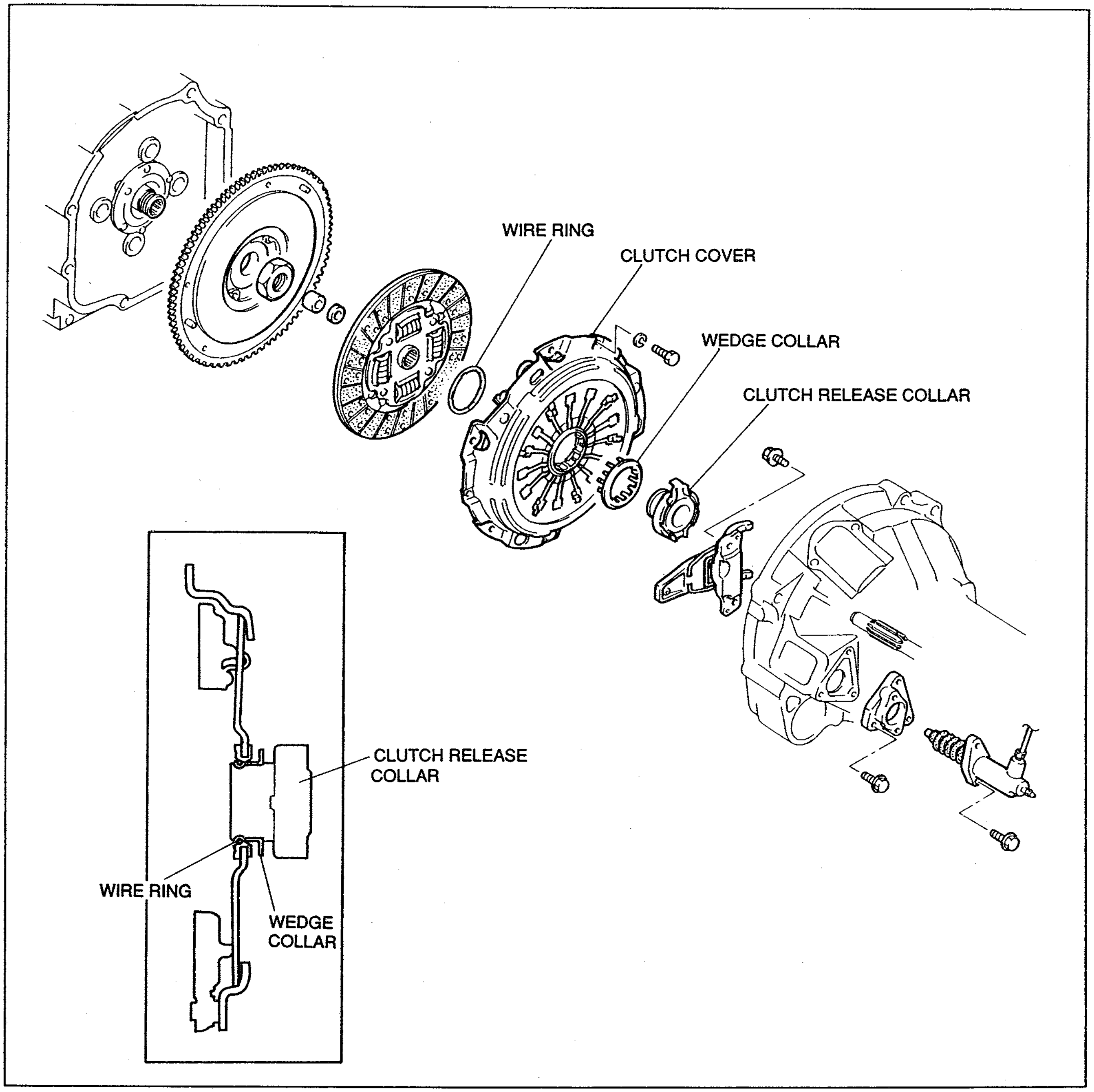

37U0HX-510

The release collar is held to the diaphragm spring by a wire ring that fits into a groove in the release collar extension. An inward-tapered ring plate installed to the diaphragm spring keeps the wire ring from coming out of the groove when the clutch pedal is pressed, thus holding the release collar to the diaphragm spring.

When the pedal is at the resting position, the release fork return spring maintains enough tension to keep the release collar pulled in the direction of the transmission.

This keeps the wire ring pulled into the tapered ring plate, thus preventing the wire ring from accidentally slipping off the release collar. A wedge collar installed along the inner surface of the wire ring allows for removal of the wire ring from the groove and removal of the transmission. In the event that the clutch cover and release collar are separated, the wedge collar and wire ring must be replaced to maintain reliability of the clutch unit.

CLUTCH COVER

- Release leverage is increased by use of a pull-type clutch. This allows the driver to displace a heavier preset load with the same pedal pressure.
- Clutch disengagement is improved by a design which shortens the distance between the clutch cover installation bolts and the diaphragm spring pivot point. This shortened distance minimizes diaphragm spring flex, making clutch disengagement quicker and more effective.
- The pivot point location on the pull-type clutch is different from that of the push type. The distance A between the pivot point and the force application point on the pull type clutch is longer than that (A') of the push type. This increases the release leverage A/B over A'/B'; therefore if both clutches have the same preset load, the pull-type clutch will require less pedal pressure than the push type, and operation will be easier.

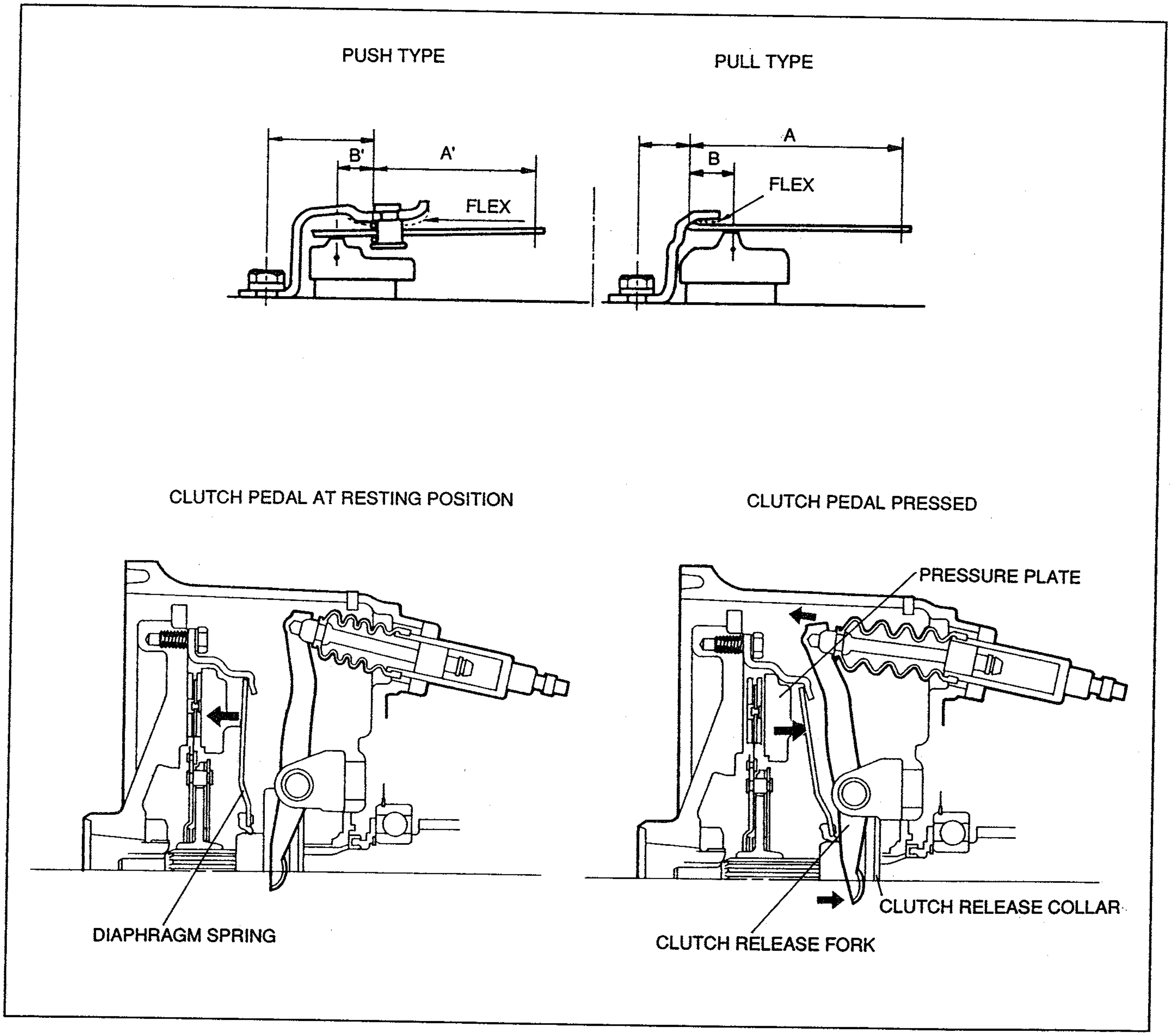

37U0HX-511

Explanation of Mechanism

1. Clutch pedal at resting position

The diaphragm spring applies constant leftward force to the pressure plate.

2. Clutch pedal pressed

When the clutch pedal is pressed, the release fork moves the clutch release collar rightward and the diaphragm spring is pulled back. The pressure plate, which is clipped to the diaphragm spring, moves rightward with the release collar. The clutch disc and pressure plate are thus separated, and the clutch is disengaged.

MANUAL TRANSMISSION (R15M–D)

37U0JX-501

OUTLINE

- The new RX-7 uses the standard R15M-D (R5M-D) manual transmission.
- An oil baffle within the transmission interior improves operability.
- Bearings and bushings within the shift mechanism reduce control rod and shift rod friction during operation, and thus make shifting easier.
- Use of a double cone synchronizer (synchro) mechanism for 2nd and 3rd gears improves operability.
- A Power Plant Frame (PPF) is used to improve drivability.

37U0JX-502

FEATURES

Improved operability	Control rod antifriction bearings are used	J– 8
	Bushings are installed in the shift rod bores	J– 8
	Double cone synchro mechanism is adopted	J– 6
	Oil baffle is adopted	J– 5
Improved reliability	Anti-double engagement device is used	J– 9
Improved driveability	Power Plant Frame (PPF) is newly adopted	J–10

37U0JX-503

SPECIFICATIONS

Engine/Transmission **Item**			**13B Turbo**
			R15M-D (R5M-D)
Shift type			5–speed, floor
Operation			Direct
Synchronization mechanism			Synchromesh
Gear ratio	1st		3.483
	2nd		2.015
	3rd		1.391
	4th		1.000
	5th		0.806
	Reverse		3.288
Oil	Grade		API Service GL-4 or GL-5
	Viscosity	All-season	SAE 75W-90
		Above 10°C {50°F}	SAE 80W-90
	Capacity	L {US qt, Imp qt}	2.5 {2.6, 2.2}

37U0JX-504

STRUCTURAL VIEW

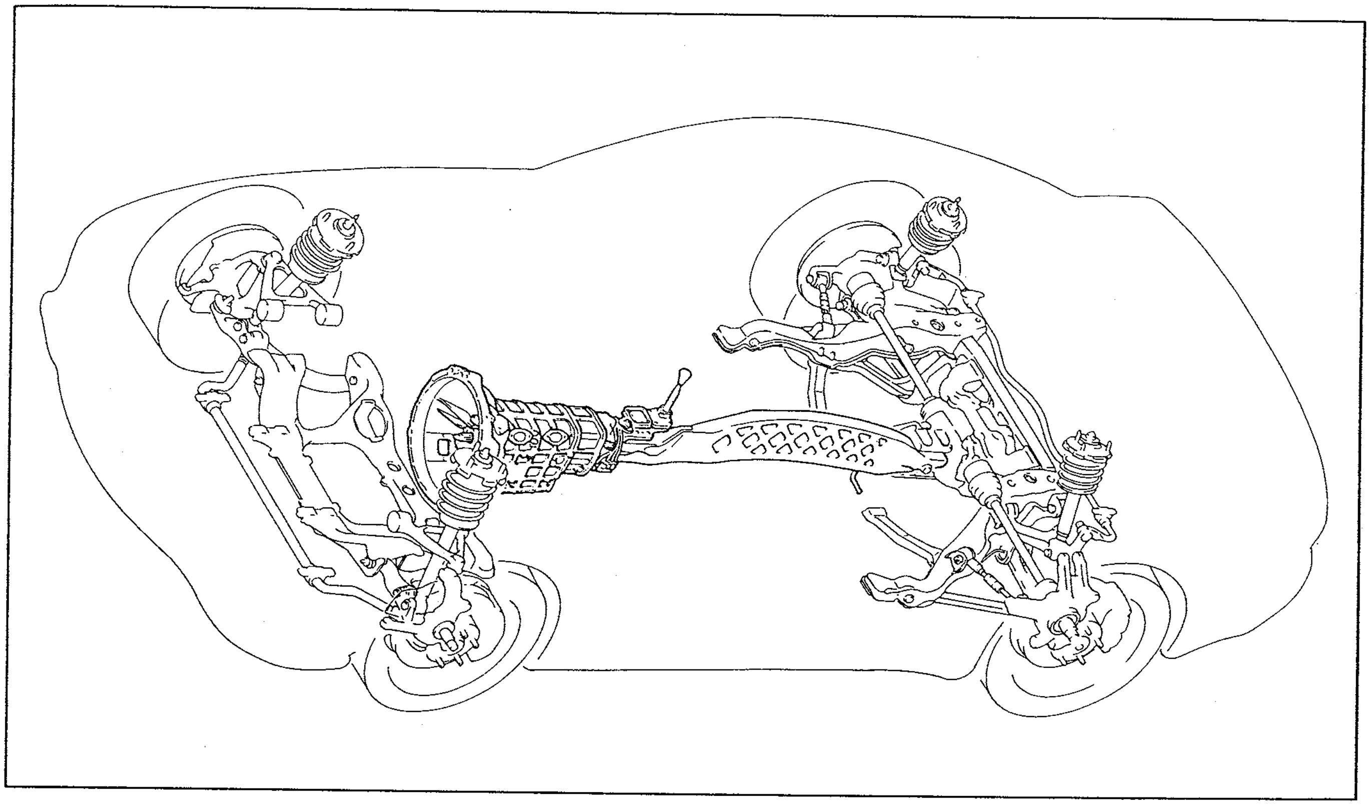

37U0JX-505

CROSS-SECTIONAL VIEW

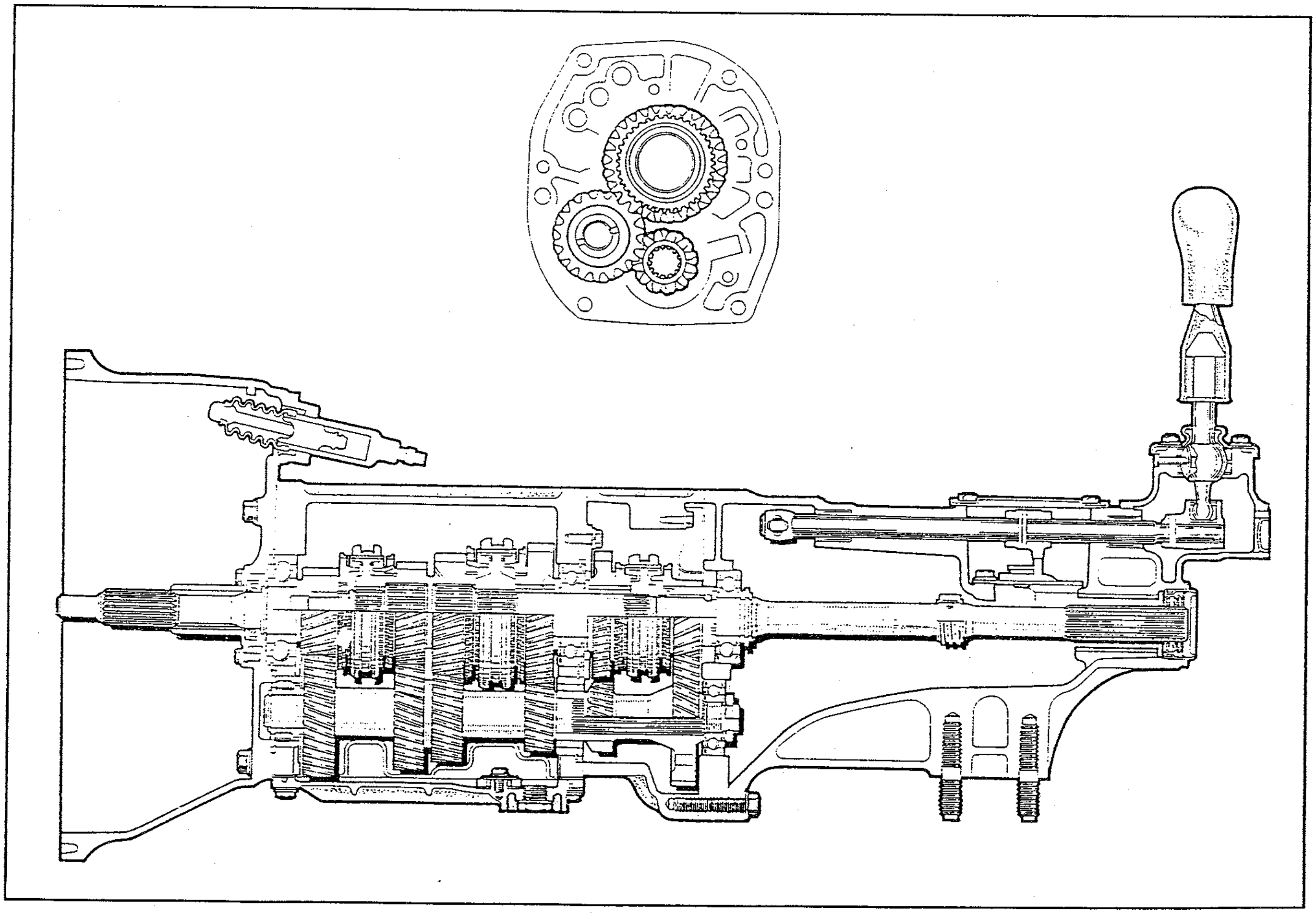

37U0JX-506

TRANSMISSION

POWERFLOW

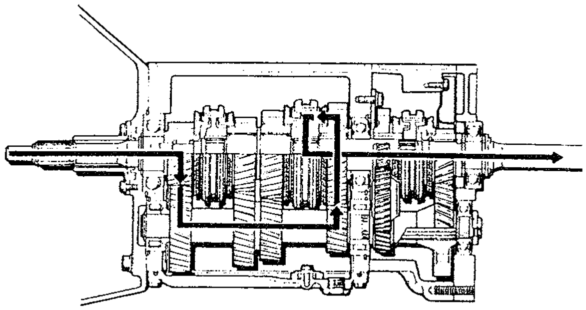
1ST

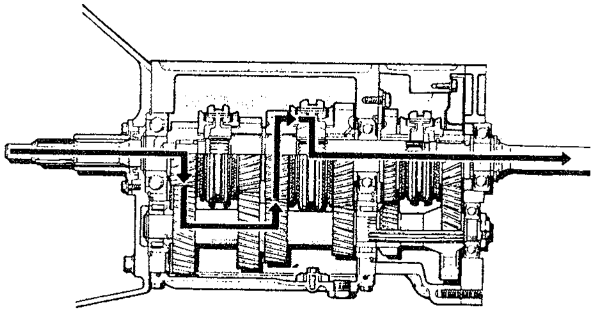
2ND

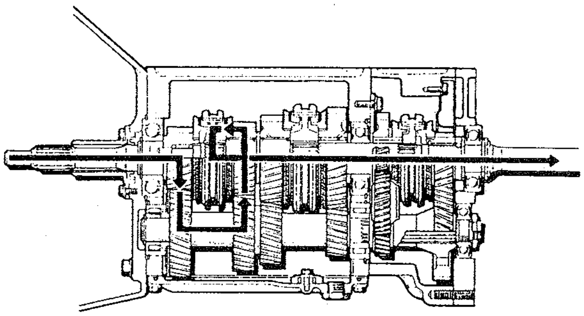
3RD

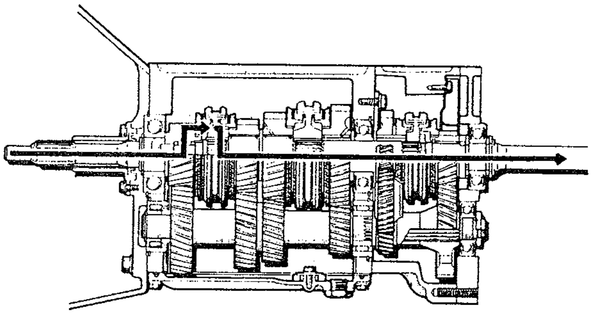
4TH

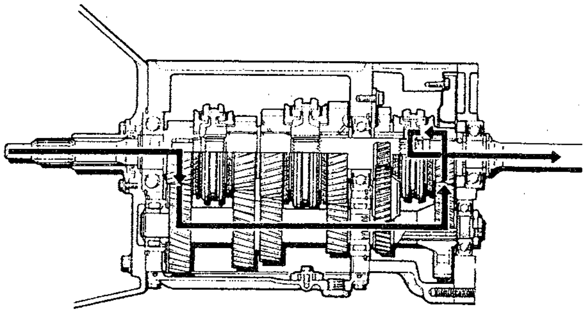
5TH

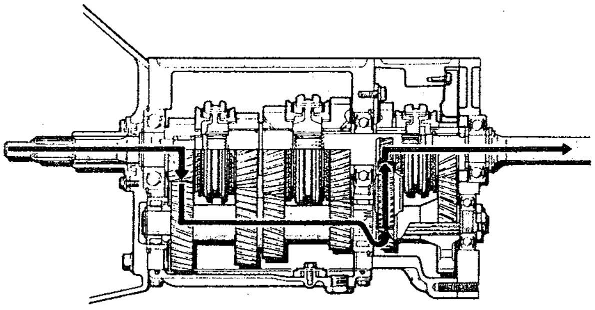
REVERSE

37U0JX-507

OIL BAFFLE

- A nylon plastic oil baffle is installed to the undercover.
- The oil baffle works with the countershaft to circulate oil throughout the transmission case, thus reducing countershaft gear resistance and improving gear mesh performance.

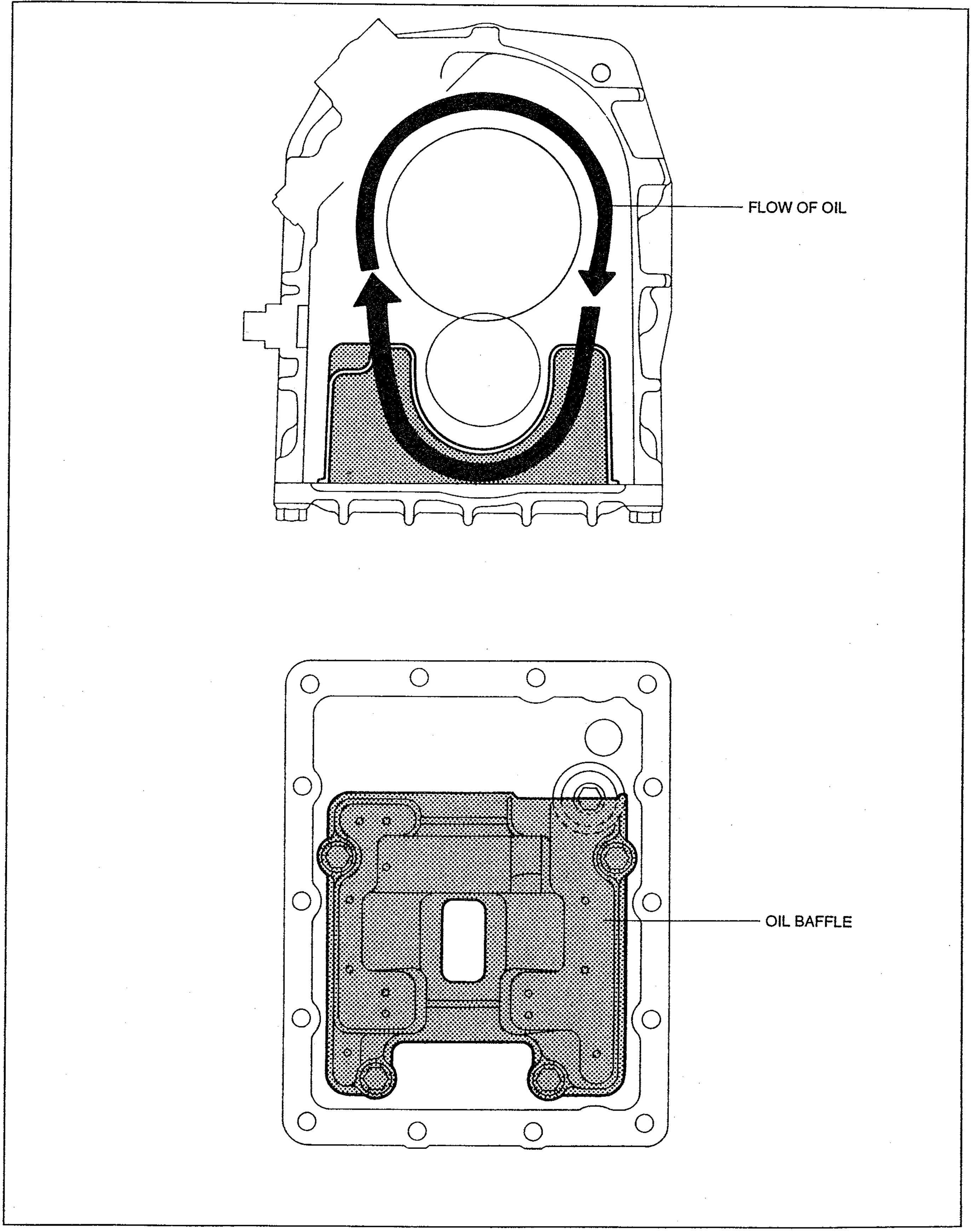

37U0JX-508

DOUBLE CONE SYNCHRONIZER MECHANISM

- A double cone synchronizer (synchro) mechanism is used for the 2nd and 3rd gears.
- The double cone synchro mechanism is a compact device capable of heavy duty meshing.
- The synchro mechanism reduces meshing time and improves operation.
- The double cone synchro mechanism includes a synchronizer ring, a double cone, and an inner cone.

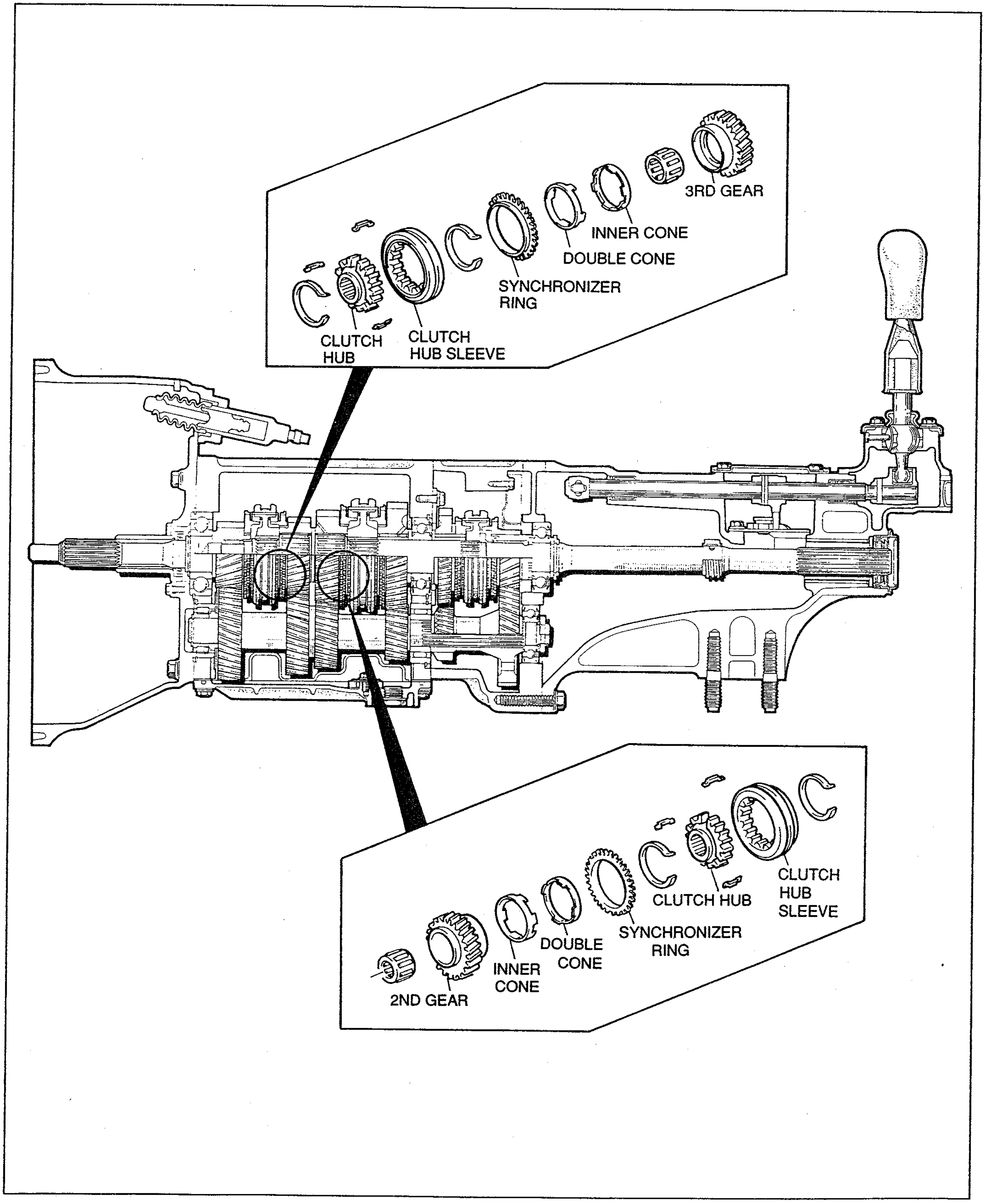

37U0JX-509

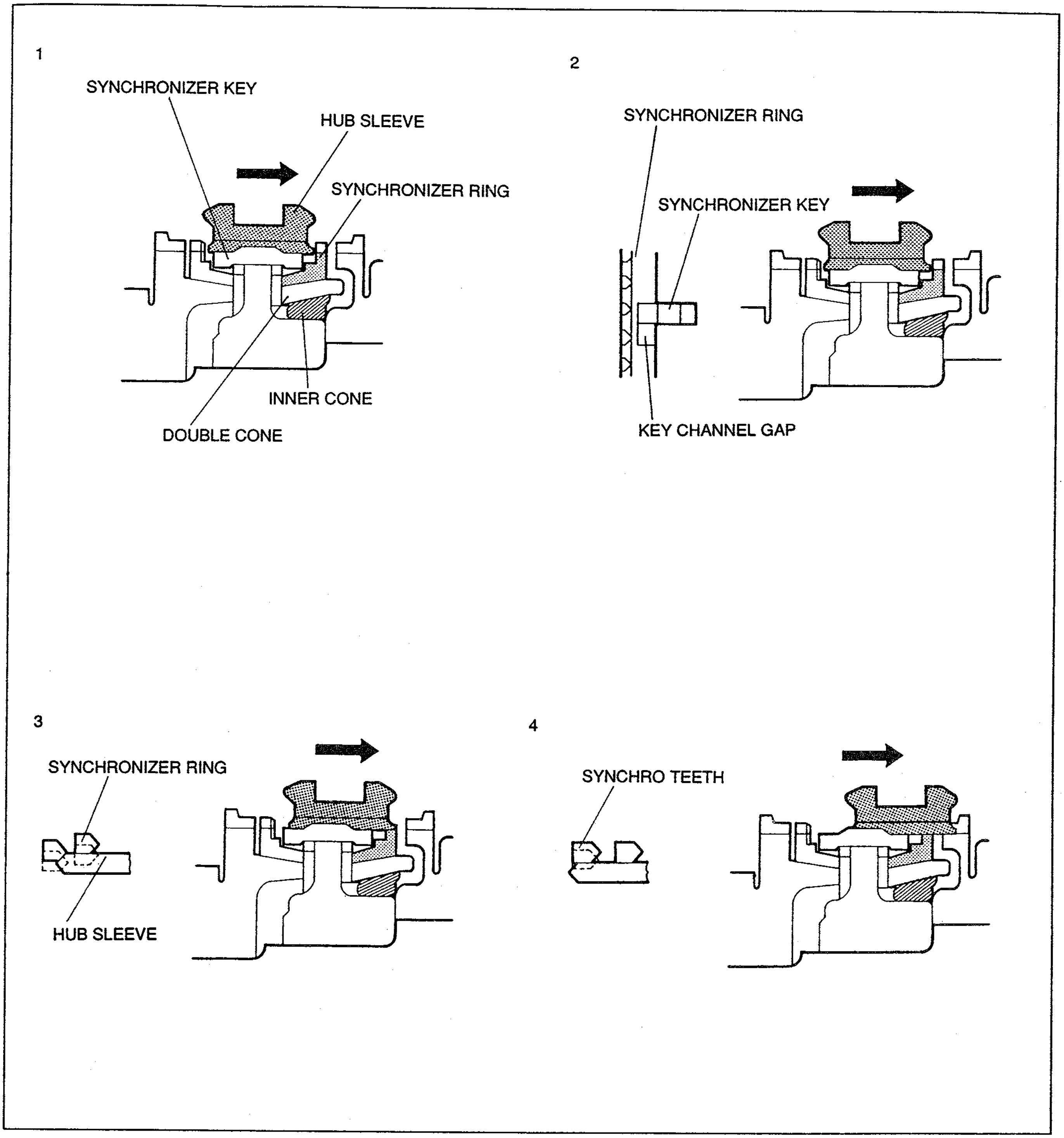

37U0JX-510

Operation

1. When the hub sleeve moves rightward (in the direction of the arrow), the synchronizer key presses against the synchronizer ring. The synchronizer ring is pressed onto the double cone, and the double cone is pressed onto the inner cone.
2. As the hub sleeve continues moving rightward, the key causes friction between the synchronizer ring, double cone, and inner cone. The synchronizer ring turns only the distance that the key channel gap allows, aligning the teeth of the hub sleeve and the synchronizer ring. As the hub sleeve continues moving, the friction between the cones becomes greater, and the difference between the rotational speeds of the synchronizer ring, inner cone, and double cone (unified with gear) gradually disappears.
3. The hub sleeve then moves up onto the synchronizer key and engages the synchronizer ring.
4. The hub sleeve then engages the synchro teeth of the gear to complete the shift.

SHIFT MECHANISM

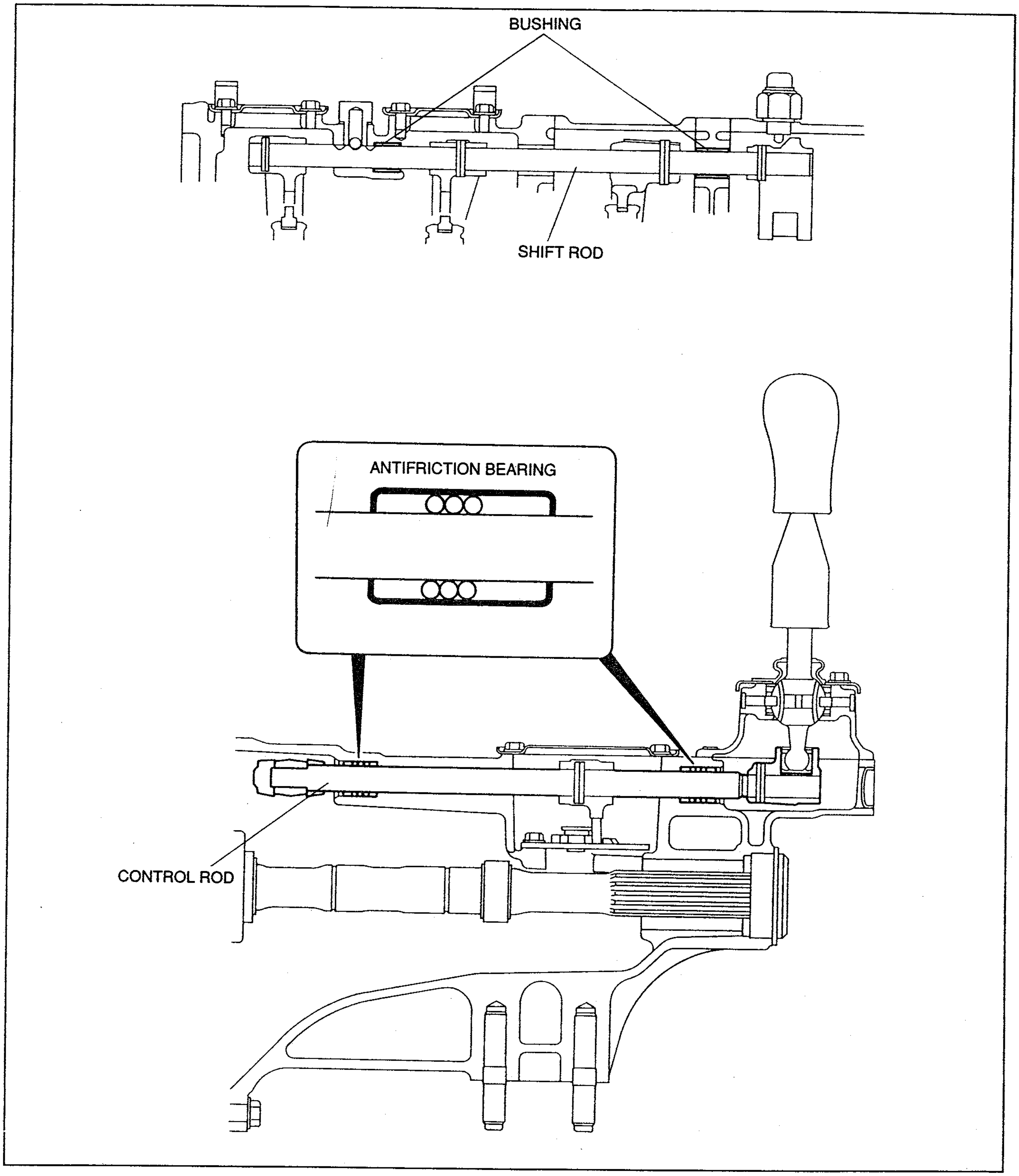

37U0JX-511

Shift Rod

- Bronze bushings are installed in the shift rod bores of the transmission case and bearing housing to reduce shift rod friction during operation.

Control Rod

- Antifriction bearings are installed in the control rod bores of the extension housing to reduce control rod friction during operation.

SHIFT INTERLOCK MECHANISM

- In normal interlock mechanisms if a shift rod is pushed, an interlock pin is forced out, locking only the neighboring shift rod. In the new interlock mechanism, another interlock pin installed inside the 3/4 shift rod ensures that when either the 1/2, 3/4, or 5/Reverse shift rod is moved, the remaining two shift rods are locked.
  This provides reliable double-engagement prevention.

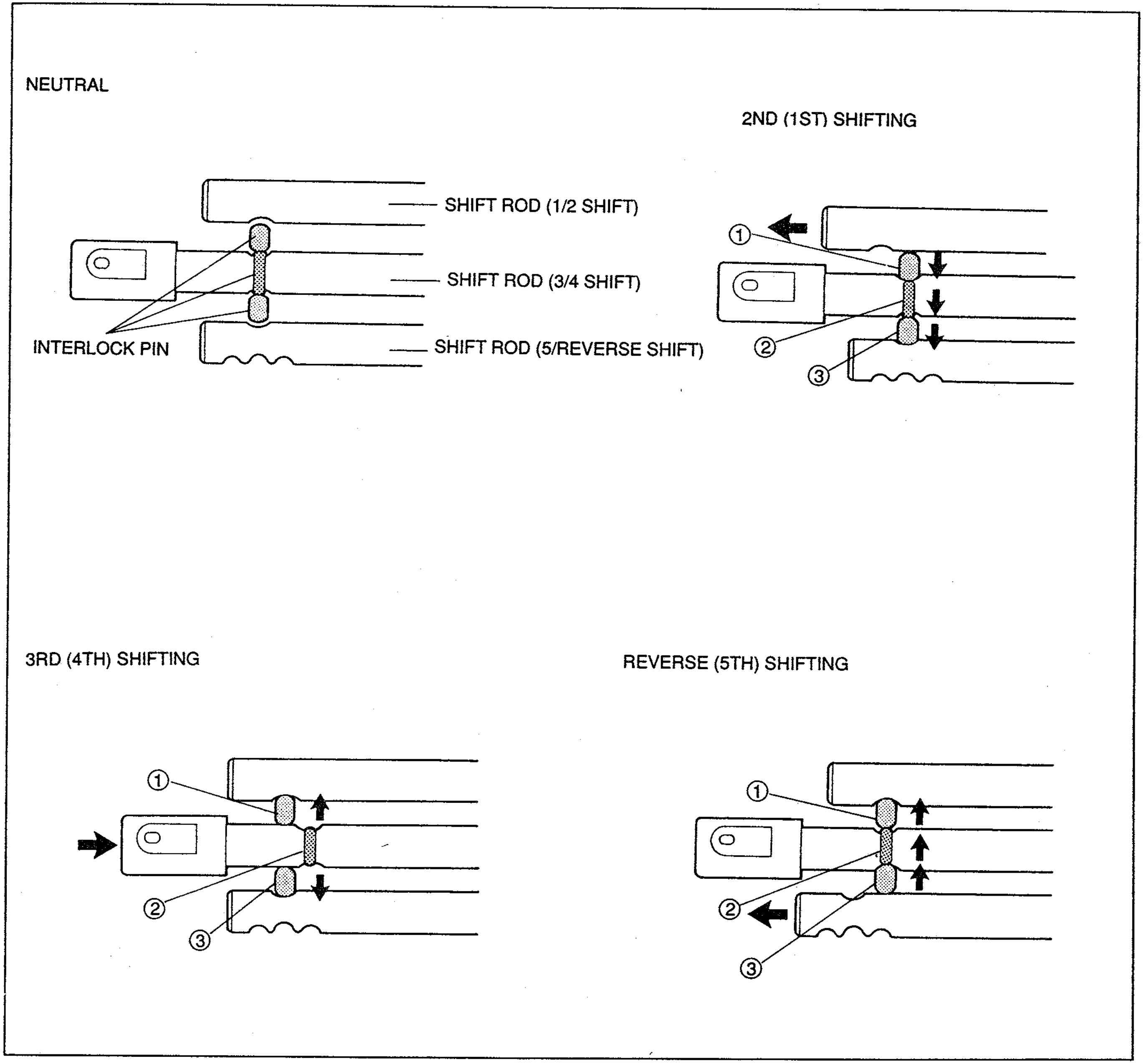

37U0JX-512

Operation

1/2 shifting

Movement of the 1/2 shift rod forces interlock pin 1 out of the 1/2 shift rod groove, and locks the 3/4 shift rod. Pin 2, forced by pin 1, pushes out pin 3 to lock the 5/Reverse shift rod.

3/4 shifting

Movement of the 3/4 shift rod forces out pins 1 and 3, and locks the 1/2 and 5/Reverse shift rods. Pin 2 does not affect the other pins or shift rods during 3/4 shifting.

5/Reverse shifting

When performing 5/Reverse shifting, the interlock pins function the same way as in 1/2 shifting, except the pin movement order is in reverse, and the 3/4 and 1/2 shift rods are locked.

POWER PLANT FRAME (PPF)

The Power Plant Frame (PPF) creates a more direct, linear connection between the transmission and differential. A bracket installed between the transmission and differential maintains rigidity. This creates a more direct feeling between the vehicle and drive line, while at the same time generating a crisper shift.

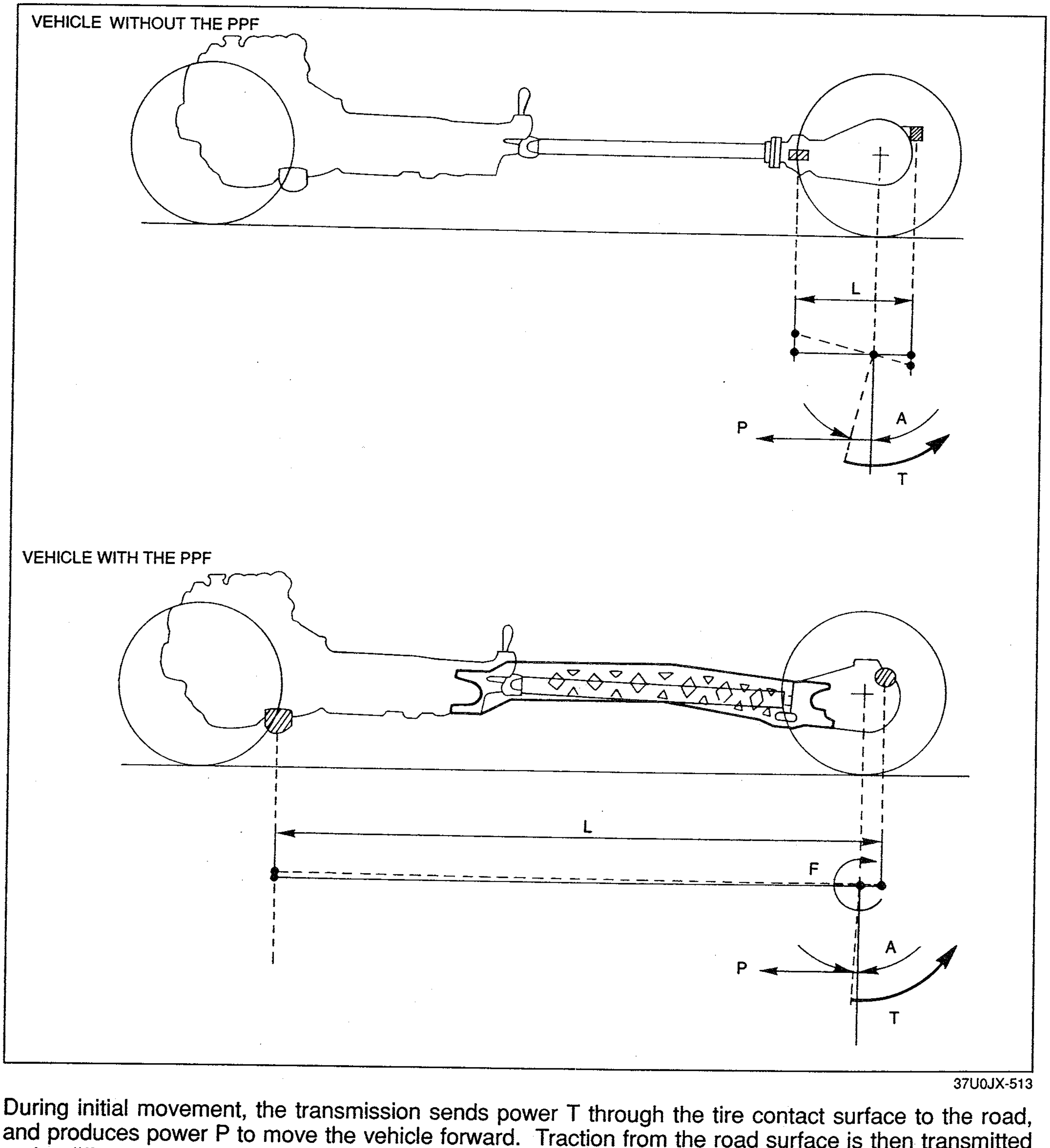

37U0JX-513

During initial movement, the transmission sends power T through the tire contact surface to the road, and produces power P to move the vehicle forward. Traction from the road surface is then transmitted to the differential as rotational force F.

Mount span L, found in vehicles equipped with the PPF, is the area of rigidity that spans the distance from the differential to the engine mount. It greatly reduces the differential's angle of rotation A, more so than in cars without the PPF. Because of the rigidity and reduced angle of rotation, acceleration power is transmitted more linearly and efficiently. Also, power can be transmitted directly to the road surface, while at the same time reducing engine/transmission pitch.

AUTOMATIC TRANSMISSION

OUTLINE

- The 1993 RX-7 uses an RB4A-EL type 4-speed, electronically-controlled automatic transmission. The basic construction and operation are the same as the 1992 929 R4A-EL type automatic transmission, however, some specifications are changed to match the characteristics of the RX-7's rotary engine.
- The automatic transmission features a shift-lock system for improved safety.
- A power plant frame (PPF), interconnecting the driveline, is installed to improve drivability. (Refer to Section J.)

Comparison of 1993 RX-7 (RB4A-EL) and 1992 929 (R4A-EL)

1. To improve engine cooling, the EC-AT control unit lowers the lockup points when the engine coolant temperature exceeds 115°C {239°F}.
2. Service code number "58 (atmospheric pressure sensor)" is added to the EC-AT control unit self-diagnosis function.
3. The transmission gear ratios and the final gear ratio are different to improve acceleration.
4. To cope with the increased power of the rotary engine, the band servo piston diameter, forward clutch drive/driven plate numbers, and low and reverse brake drive/driven plate numbers are increased.

37U0KX-502

SPECIFICATIONS

Model Item		1993 RX-7	1992 929
		RB4A-EL	R4A-EL
Engine type		13B Turbo	JE DOHC
Transmission control		Floor shift	
Operation method		Rod	
Gear ratio	1st	3.027	2.785
	2nd	1.619	1.545
	3rd	1.000	
	O/D	0.694	
	Reverse	2.272	
Final gear ratio		3.909	4.300
Automatic transmission fluid (ATF)	Type	Dexron® II or M-III	
	Capacity L {US qt, Imp qt}	8.6 {9.1, 7.6}	
Torque converter stall torque ratio		2.200	2.400
Hydraulic system (number of drive/driven plates)	Reverse clutch	2/2	
	High clutch	4/7	
	Forward clutch	6/6	5/5
	Overrunning clutch	3/5	
	Low and reverse brake	7/7	6/6
Band servo mm {in}	Servo piston diameter (large/small)	80.0/50.0 {3.15/1.97}	72.0/44.0 {2.83/1.73}
	O/D servo piston outer diameter	72.0 {2.83}	68.0 {2.68}
Front planetary carrier (number of teeth)	Sun gear	33	
	Pinion gear	21	
	Internal gear	75	
Rear planetary carrier (number of teeth)	Sun gear	37	42
	Pinion gear	19	17
	Internal gear	75	

37U0KX-503

OUTLINE OF OPERATION

Range	Gear position	Gear ratio	Except HOLD mode			HOLD mode		
			Shift	Lockup	Engine braking	Shift	Lockup	Engine braking
P	—	—	—			—		
R	Reverse	2.272	—	—	○	—	—	○
N	—	—	—			—		
D	1st	3.027	↕			—		
	2nd	1.619	↕		○ *1	Low speed ↕		○ *1
	3rd	1.000	↕	○	○ *1	Fixed	○	○ *1
	O/D	0.694		○	○	↑		○
S	1st	3.027	↕			—		
	2nd	1.619	↕		○ *2	Fixed		○ *2
	3rd	1.000		○	○ *2	↑	○	○ *2
L	1st	3.027	↕		○	Fixed		○
	2nd	1.619			○	↑		○

37U0KX-504

➡ Does not shift unless the selector lever push button is depressed.
⇨ Shifts without depressing the selector lever push button.
↔ Indicates that transmission shifts in the direction of the arrow.
○ Indicates that lockup or engine braking is available.
○ *1 Engine braking is actuated at vehicle speeds over 10 km/h {6.2 MPH} and at throttle opening below 1.3/8.
○ *2 Engine braking is actuated at throttle opening below 1.3/8.

CROSS-SECTIONAL VIEW

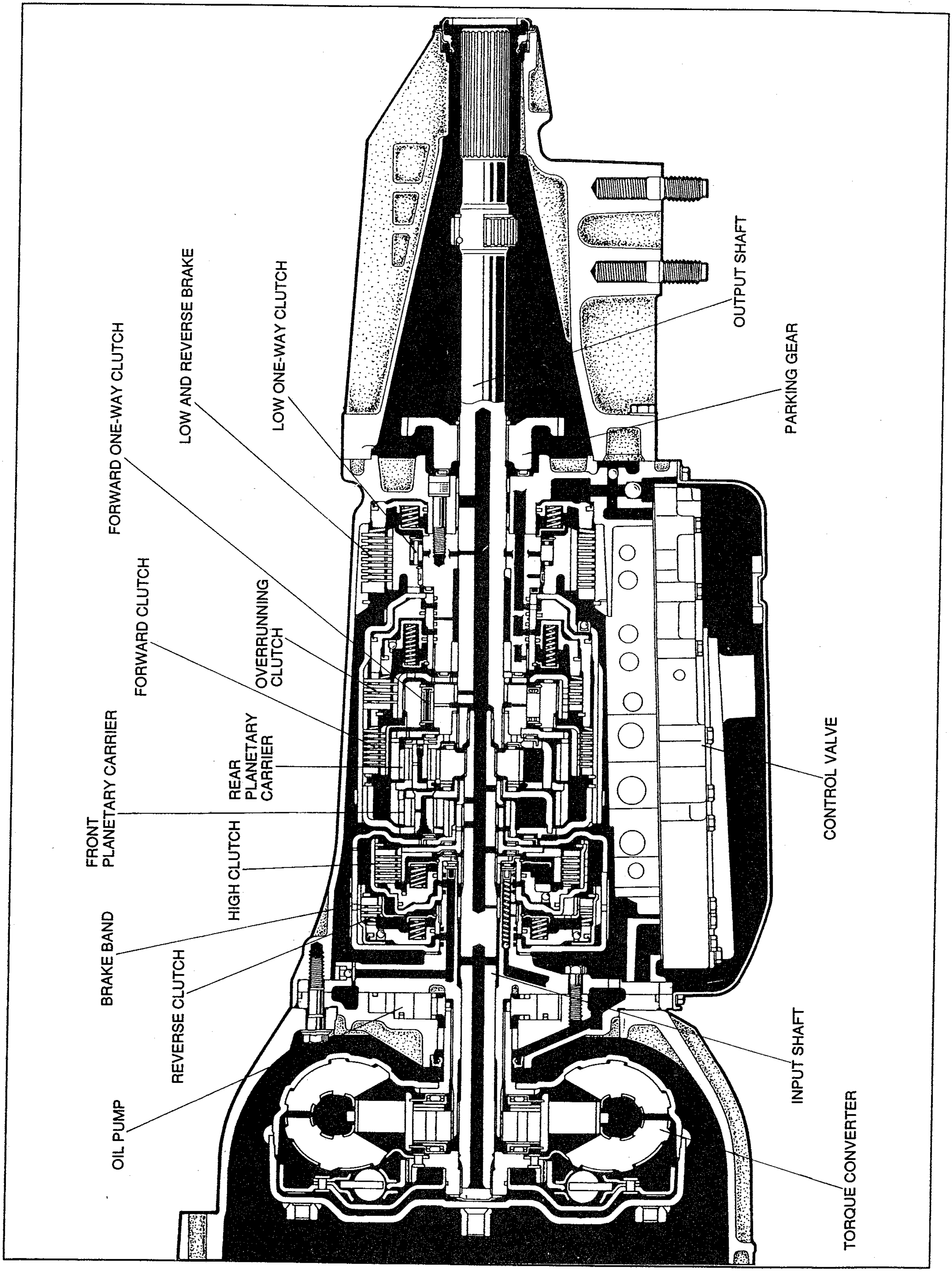

19G0KX-706

OUTLINE OF CONSTRUCTION

- The EC-AT can be divided into two systems: the transmission (mechanical system), which operates on hydraulic pressure, and the electronic control (electrical system), which electronically controls transmission pressure and operation.
- The mechanical system is the same as the 1992 929 R4A-EL type automatic transmission. Some electrical system components are added or redesigned.

(Transmission)	—— **Mechanical system** ——
Torque converter system	Torque converter
Powertrain system	Reverse clutch High clutch Forward clutch Overrunning clutch Low and reverse brake Brake band Forward one-way clutch Low one-way clutch Front planetary carrier Rear planetary carrier Input shaft Output shaft
Hydraulic control system	Control valve Oil pump

(Electronic control)	—— **Electrical system** ——	
Input system	Hold switch Throttle sensor *1 Speed sensor 1 (revolution sensor) Pulse generator Torque reduced signal Mileage switch *2 Slip lockup OFF signal *2 ATF thermosensor Atmospheric pressure sensor O/D inhibit signal (ASC signal) TAT terminal (diagnosis connector)	Inhibitor switch Idle signal *1 Speed sensor 2 (Speedometer sensor) Stoplight switch Water thermoswitch *2 A/C signal Engine rpm signal *1
Output system	Solenoid valves (shift A, B) Solenoid valve (line pressure) Solenoid valve (lockup) Solenoid valve (lockup control) Solenoid valve (overrunning clutch) Dropping resistor Reduce torque signal Slip lockup signal *2 Inhibitor signal Hold indicator	
Other components	Range indicator	
Control system	EC-AT control unit	

*1: Components are redesigned.
*2: Components are added.

COMPONENT LOCATIONS (ELECTRONIC CONTROL SYSTEM)

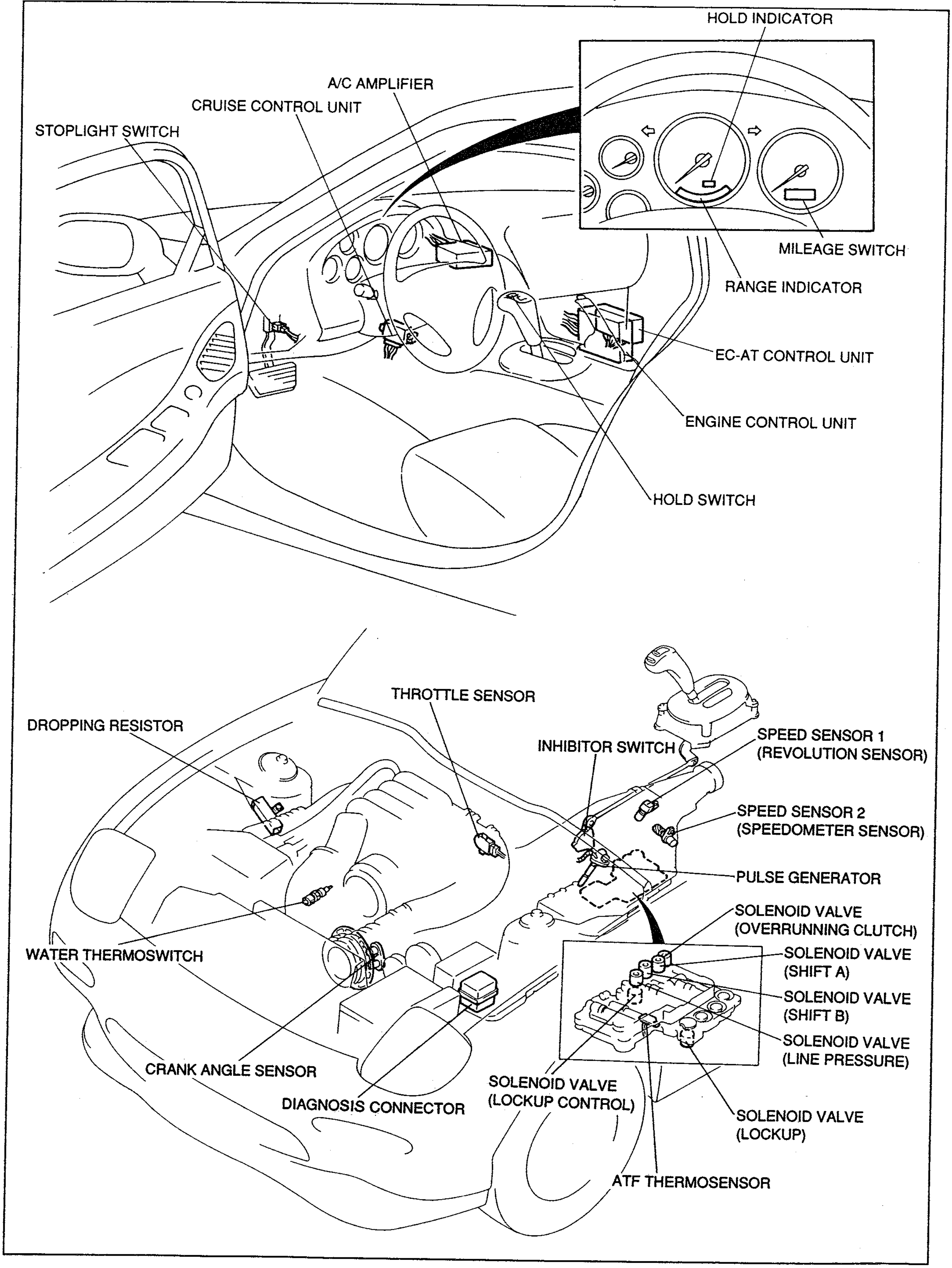

37U0KX-506

SYSTEM STRUCTURE

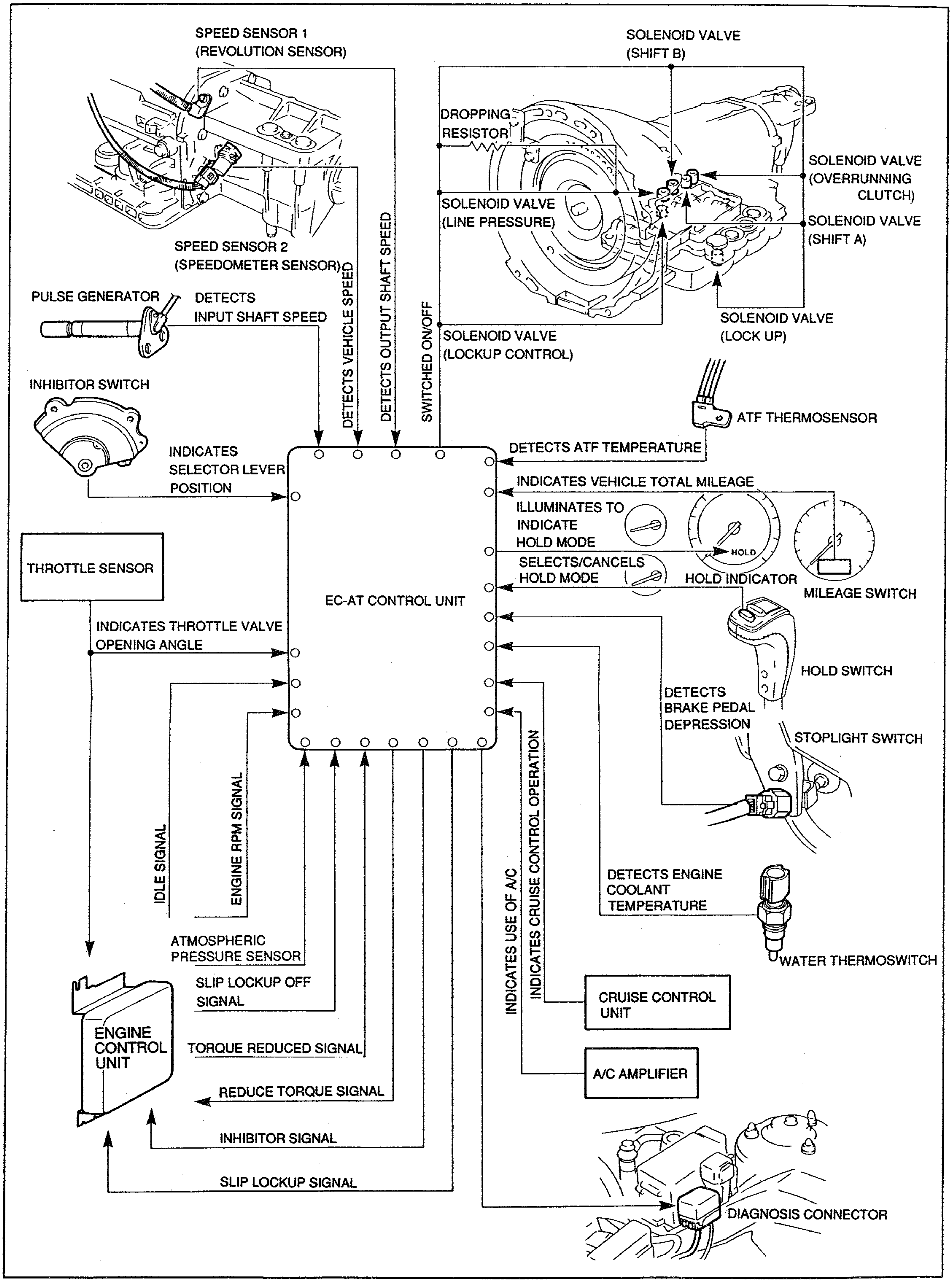

19G0KX-711

SYSTEM CIRCUIT

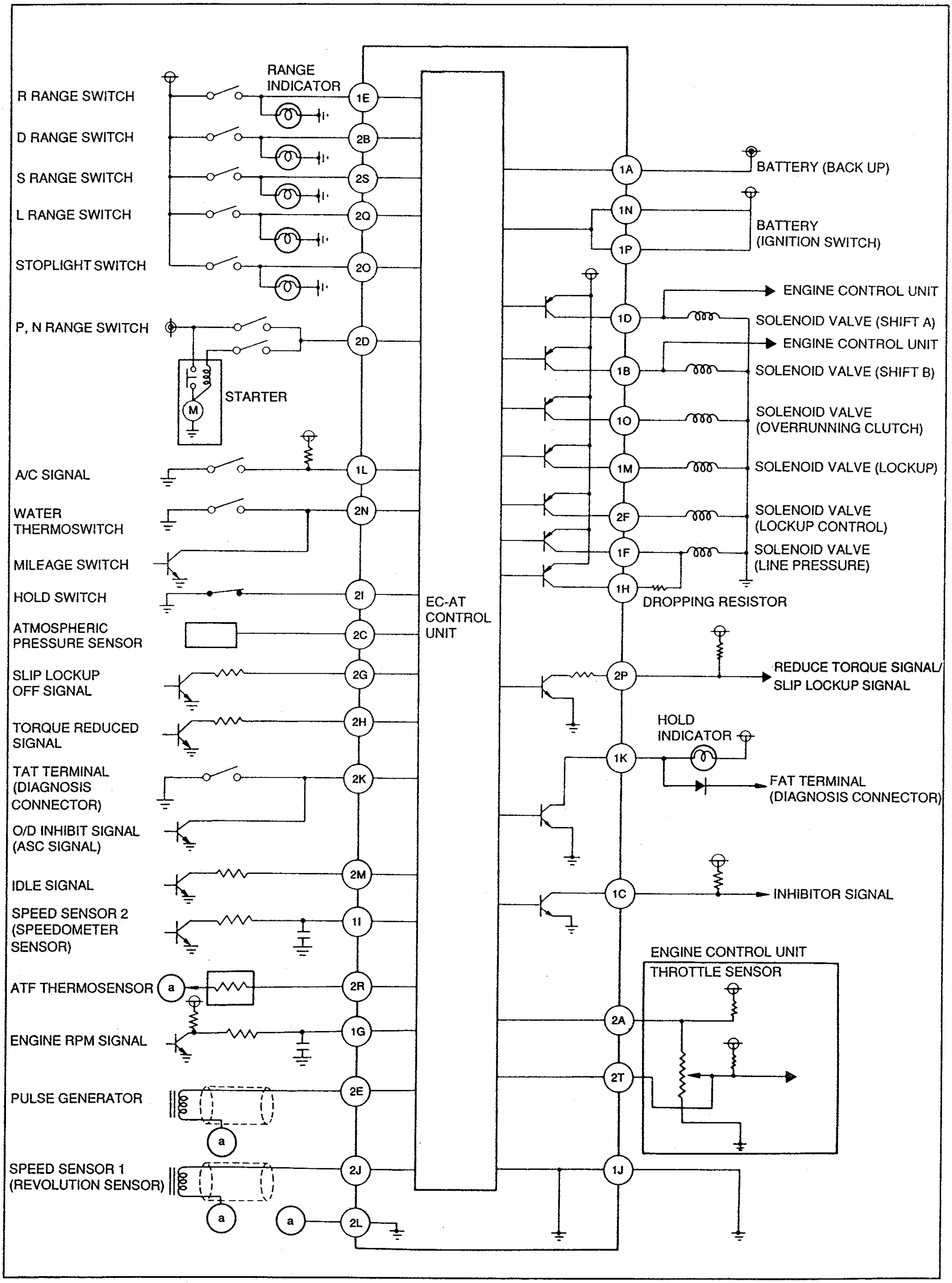

19G0KX-712

SYSTEM DIAGRAM

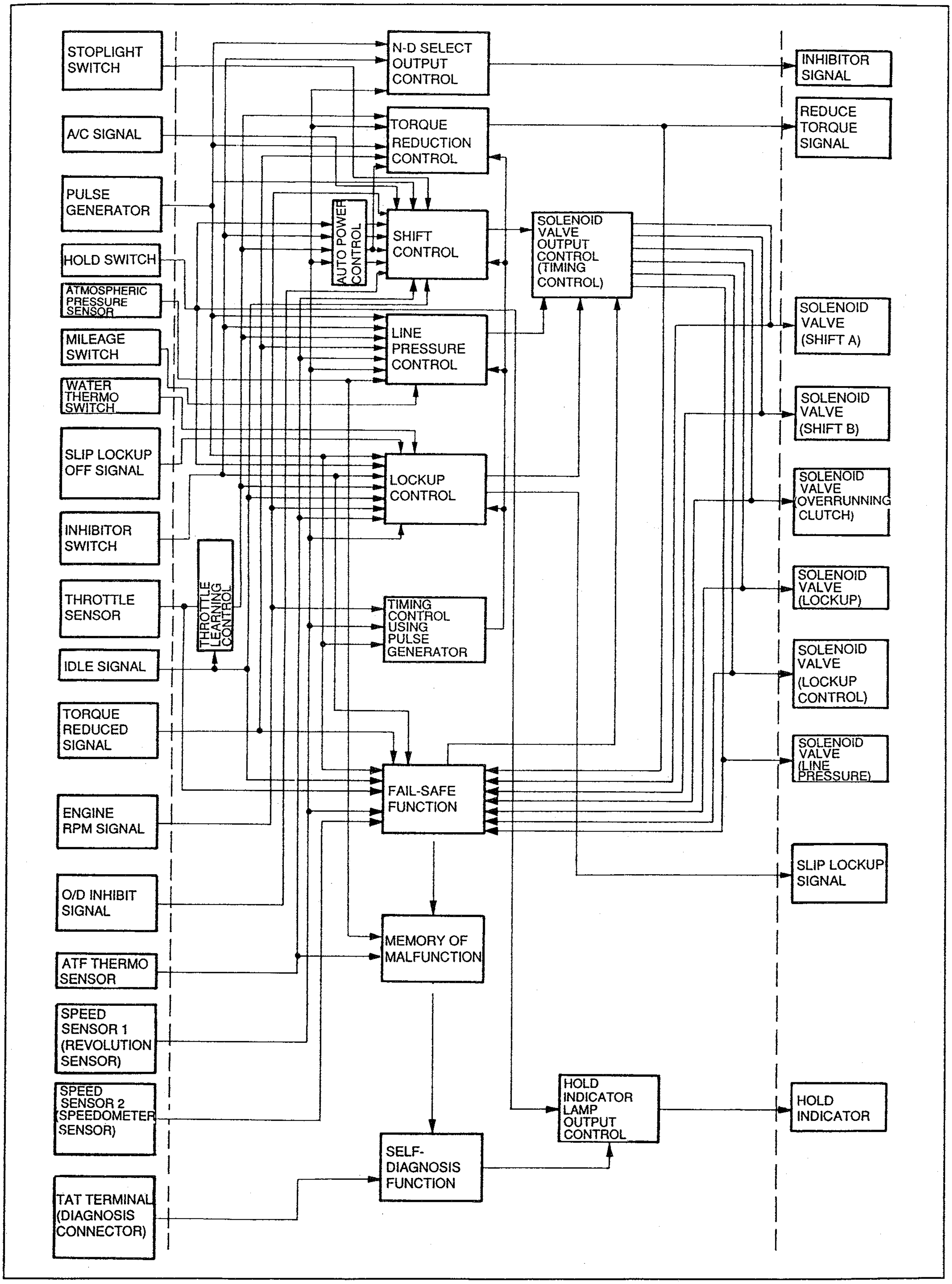

19G0KX-713

Electronic Components / Signals and Functions

Component / Signal			Function
Input system	Hold switch		Selects/cancels HOLD mode and changes shifting pattern
	Inhibitor switch		Indicates selector lever range (position)
	Throttle sensor*1		Indicates throttle valve (accelerator pedal) opening angle
	Idle signal*1		Indicates fully closed throttle valve (accelerator pedal)
	Speed sensor 1 (revolution sensor)		Detects output shaft speed
	Speed sensor 2 (speedometer sensor) (spare sensor)		Detects vehicle speed
	Pulse generator		Detects input shaft speed
	Stoplight switch		Detects brake pedal depression
	Torque reduced signal		Indicates torque reduction control available
	Water thermoswitch*2		Detects engine coolant temperature
	Mileage switch*2		Indicates vehicle total mileage
	A/C signal		Indicates use of A/C
	Slip lockup OFF signal*2		Indicates slip lockup control not available
	Engine rpm signal*1		Detects engine speed
	ATF thermosensor		Detects ATF temperature
	Atmospheric pressure sensor		Detects atmospheric pressure
	O/D inhibit signal (ASC signal)		Indicates cruise control operation
	TAT terminal (diagnosis connector)		Allows indication of service code(s) when grounded
Output system	Solenoid valve	Shift A, B	Switched ON/OFF by electrical signals from EC-AT control unit; regulates shifting by switching oil paths
		Line pressure	Switched ON/OFF by electrical signals (duty signals) from EC-AT control unit; adjusts oil pump discharge pressure to appropriate line pressure for driving condition
		Lockup	Switched ON/OFF by electrical signals (duty signals) from EC-AT control unit; controls lockup together with solenoid valve (lockup control)
		Lockup control	Switched ON/OFF by electrical signals from EC-AT control unit; controls lockup together with solenoid valve (lockup)
		Overrunning clutch	Switched ON/OFF by electrical signals from EC-AT control unit; controls engine braking based on driving condition
	Dropping resistor		Relays electrical signals from EC-AT control unit to solenoid valve (line pressure)
	Reduce torque signal		Sends signal to engine control unit when shifting
	Slip lockup signal*2		Sends signal to engine control unit during slip lockup condition
	Inhibitor signal		Sends signal to engine control unit when transmission shifted from P and N ranges to driving ranges
	Hold indicator		Illuminates to indicate HOLD mode when hold switch is activated; flashes if malfunction is detected as a result of self-diagnosis, flashes service code(s) when TAT terminal is grounded
Others	Range indicator		Illuminates to indicate selector lever range position
Control system	EC-AT control unit		Regulates shift points and lockup points according to electrical signals from various sensors; actuates solenoid valves

37U0KX-507

*1: Components are redesigned.
*2: Components are added.

RELATION OF ELECTRONIC COMPONENT AND CONTROL SYSTEM

	Control Signal	Mode selection control	Auto power control	Shift control	Timing control using pulse generator	Engine braking control	Line pressure control	Lockup control	Throttle learning control	Torque reduction control	N-D select output control	Fail-safe function	Self-diagnosis function
Input system	Hold switch	○	○	○		○		○					
	Inhibitor switch	○	○	○		○	○	○			○	○	
	Throttle sensor	○	○	○		○	○	○	○	○		○	○
	Idle signal			○				○	○			○	
	Speed sensor 1 (revolution sensor)	○	○	○	○	○	○	○		○	○	○	○
	Speed sensor 2 (speedometer sensor)	△	△	△		△	△	△		△	△	○	○
	Pulse generator			○	○		○	○		○	○	○	○
	Stoplight switch			○									
	Torque reduced signal						○			○		○	
	Water thermoswitch	○						○					
	Mileage switch						○						
	A/C signal	○		○									
	Slip lockup OFF signal							○					
	Engine rpm signal	○		○	○			○					○
	ATF thermosensor	○		○			○	○					○
	Atmospheric pressure sensor						○						○
	O/D inhibit signal (ASC signal)			○									
	TAT terminal (diagnosis connector)												○
Output system	Solenoid valves (shift A, B)			○								○	○
	Solenoid valve (line pressure)						○					○	○
	Solenoid valve (lockup)							○				○	○
	Solenoid valve (lockup control)							○				○	○
	Solenoid valve (overrunning clutch)					○						○	○
	Reduce torque signal									○		○	○
	Slip lockup signal							○					
	Inhibitor signal										○		
	Hold indicator	○											○

△ : Backup for speed sensor 1 (revolution sensor)

37U0KX-508

INPUT SIGNAL SYSTEM

THROTTLE SENSOR

- The throttle sensor, (variable resistor linear-type) attached to the throttle body, is basically the same as for the 1992 RX-7.

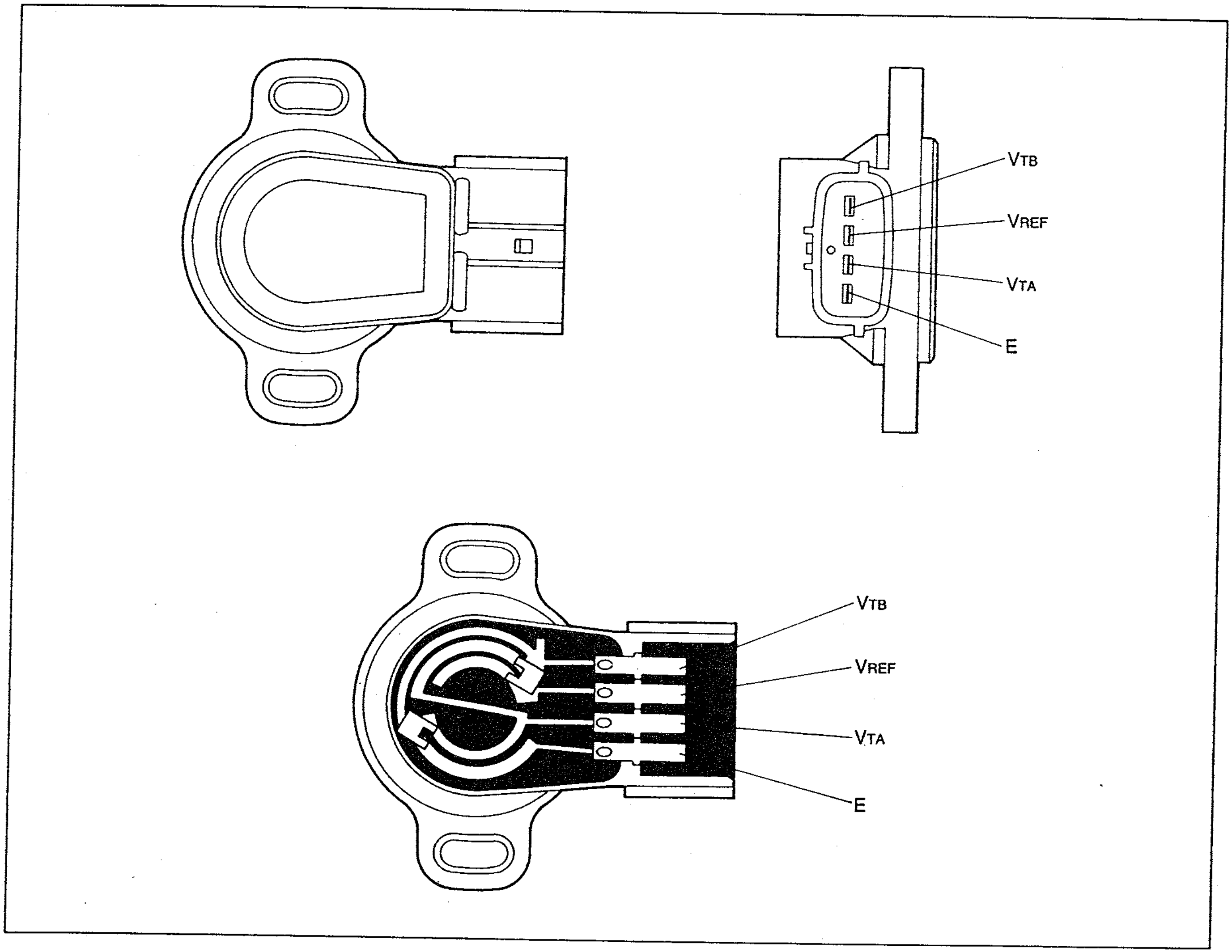

37U0KX-509

Construction

- The throttle sensor contains a plate which is coaxially connected to the throttle valve.
  This plate rotates together with the throttle valve and is so designed that the contact points slide over the resistor, which is printed on a base plate.

Operation

- As the plate rotates, resistance between terminals V_{TB} and E increases in proportionately.
  Therefore, voltage between terminals V_{TB} and E also increases in proportion to the resistance.
  The EC-AT control unit then calculates the voltage ratio between terminals V_{TB} and E and terminals V_{REF} and E as the throttle valve opening angle.

$$\text{Voltage ratio (\%)} = \frac{V_{TB} \leftrightarrow \text{E voltage}}{V_{REF} \leftrightarrow \text{E voltage}} \times 100$$

Note

- **V_{TA} signal is for engine control, and has no relation to the EC-AT system control.**

IDLE SIGNAL

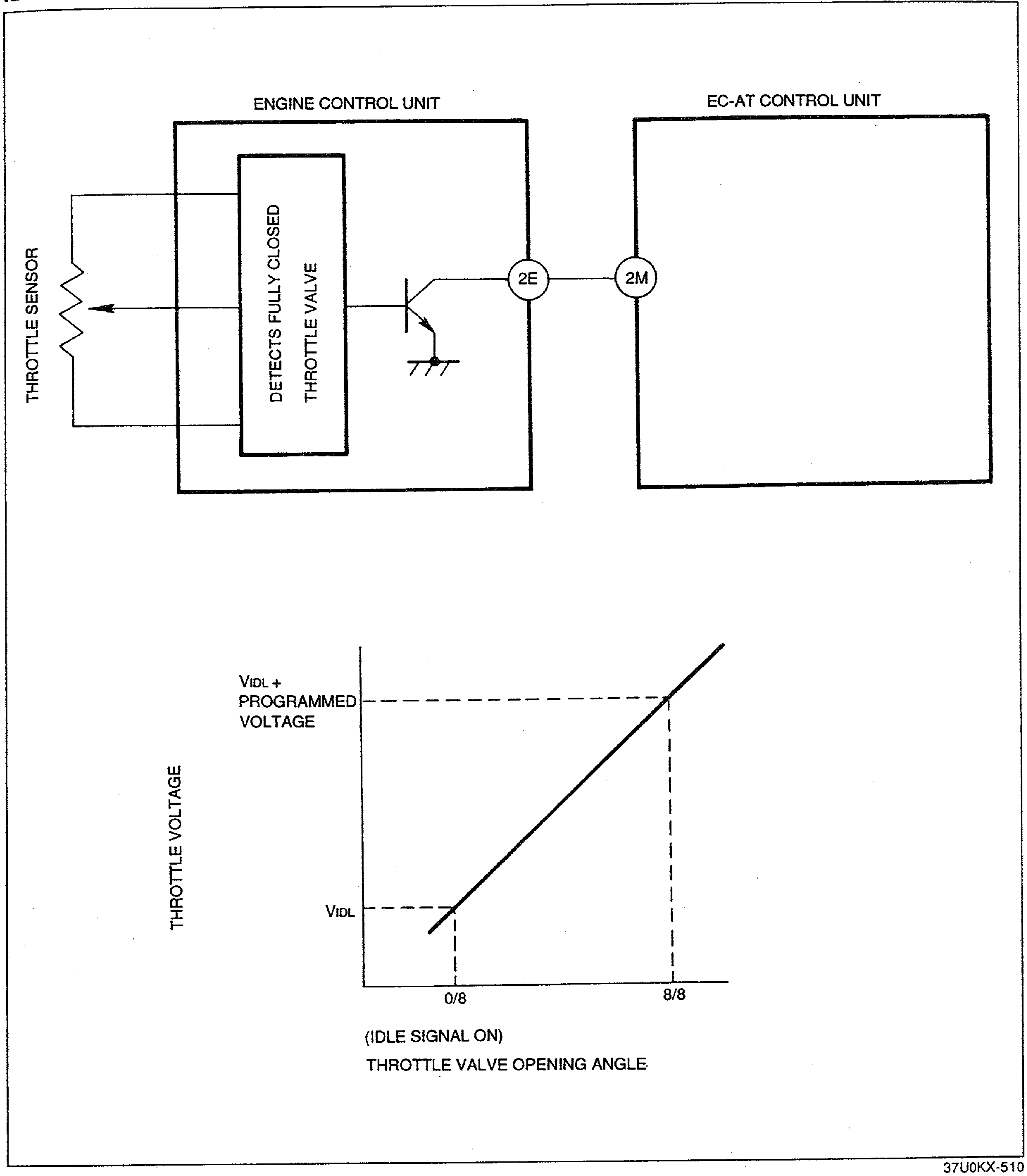

37U0KX-510

- The idle signal is output by the engine control unit (ECU).
  The ECU detects the throttle valve opening angle and sends a signal to the EC-AT control unit when the throttle valve is fully closed (idle).
  Also, to compensate for slight variation in throttle voltage, a throttle learning control program is contained in the ECU, the same as that employed for the 1992 929.
  Throttle learning control registers the voltage when the idle signal is ON (throttle valve is fully closed) as the voltage at 0/8 throttle valve opening (V_{IDL}). Based on this data, the throttle learning control calculates the voltage at 8/8 throttle valve opening as V_{IDL} + programmed voltage.

ENGINE RPM SIGNAL

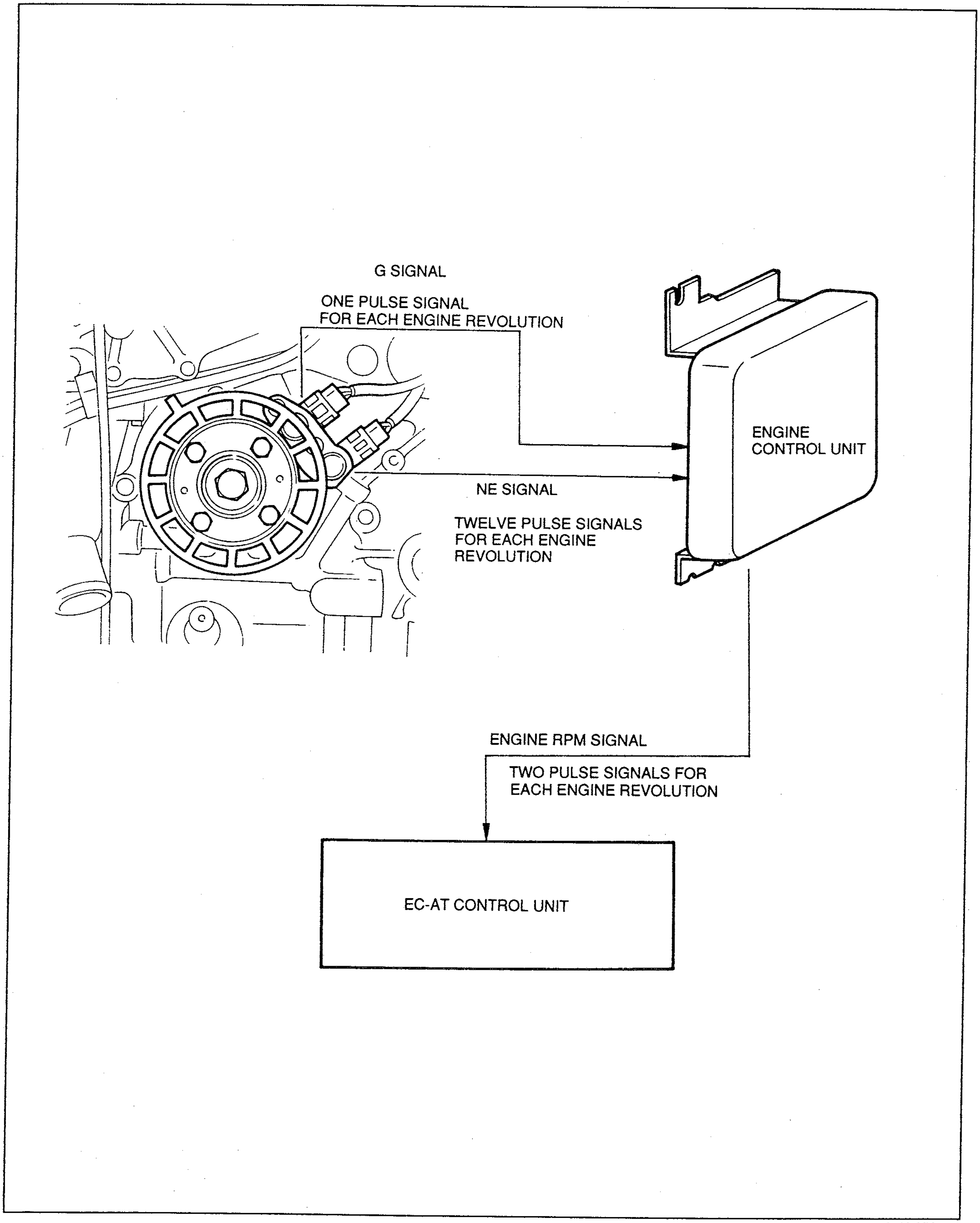

37U0KX-511

- Igniter pulse signals are input to the EC-AT control unit as engine rpm signals to control the driving pattern, shift timing, and lockup operation.
- Two pulse signals are input for each revolution of the engine.

MILEAGE SWITCH

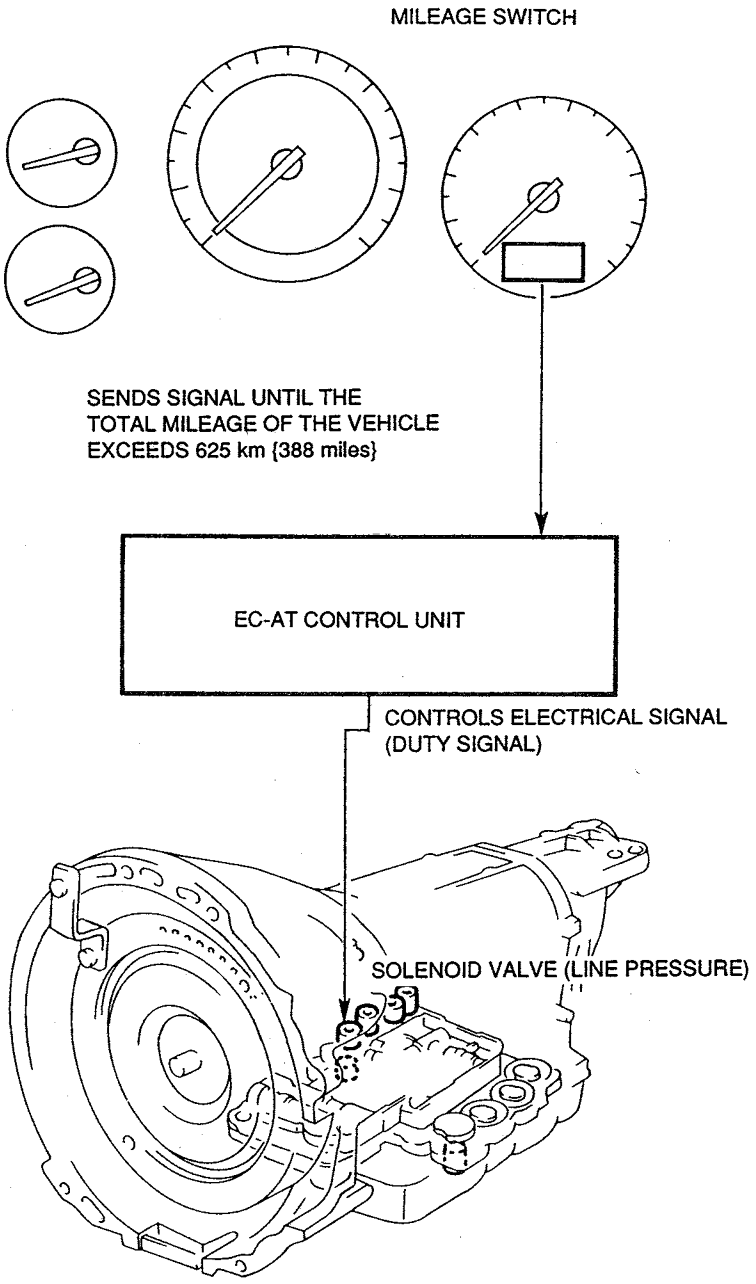

37U0KX-512

Mileage Switch

- A mileage switch is included in the instrument cluster.
- Until the total mileage of the vehicle exceeds 625 km {388 miles}, as indicated by the mileage switch, the EC-AT control unit reduces the line pressure to improve break-in of the transmission.
- At 625 km {388 miles}, the mileage switch opens to signal the EC-AT control unit.

WATER THERMOSWITCH, SLIP LOCKUP OFF SIGNAL

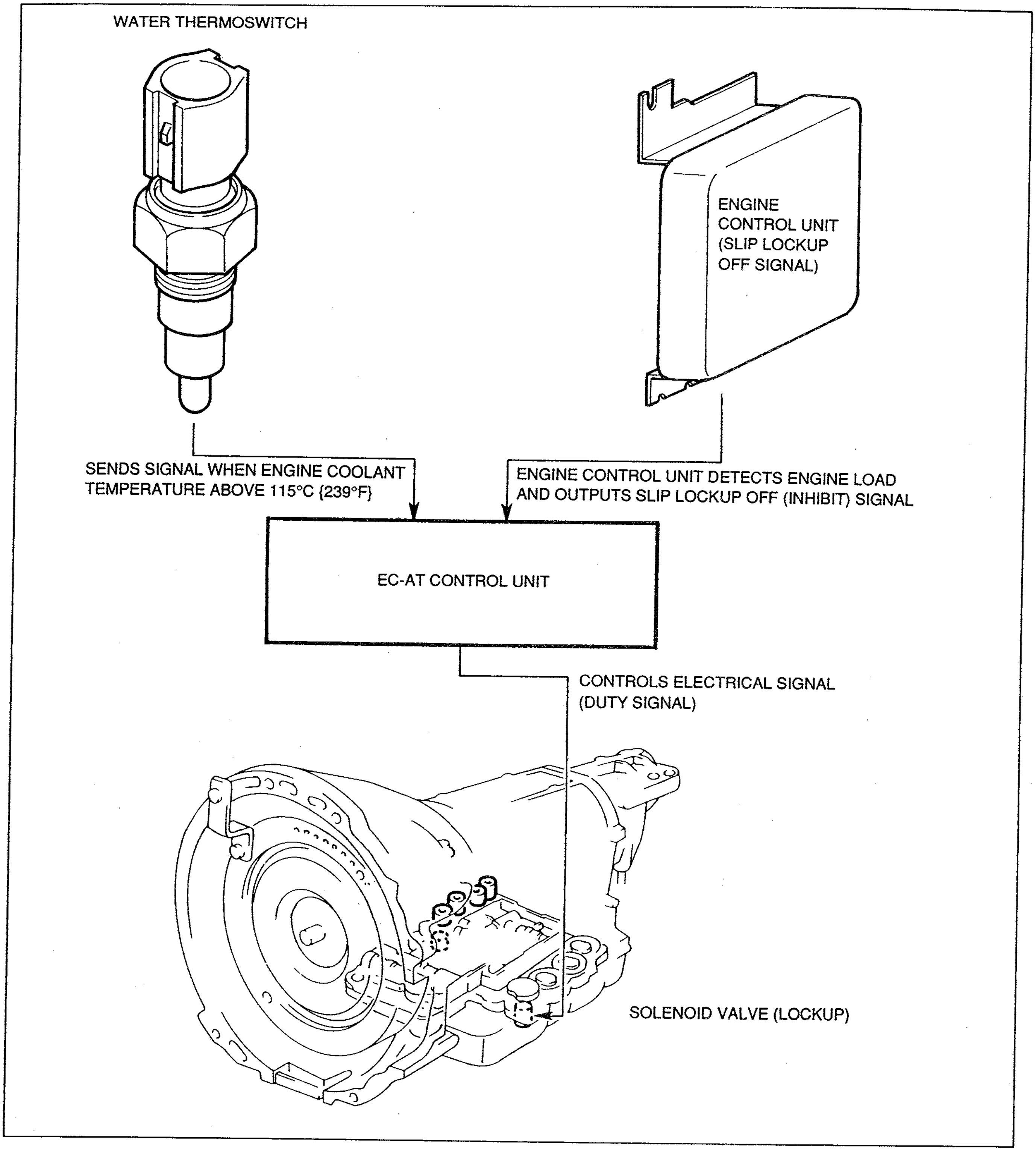

37U0KX-513

Water Thermoswitch

- The water thermoswitch is installed on the thermostat cover to detect engine coolant temperature.
- When the engine coolant temperature is more than 115°C {239°F}, the EC-AT control unit commands lockup engagement at lower speeds than normal to reduce the load on the engine and to improve cooling performance.

Slip Lockup OFF Signal

- The engine control unit detects engine load and outputs the slip lockup OFF signal to inhibit slip lock-up operation when necessary.

OUTPUT SIGNAL SYSTEM

SLIP LOCKUP SIGNAL

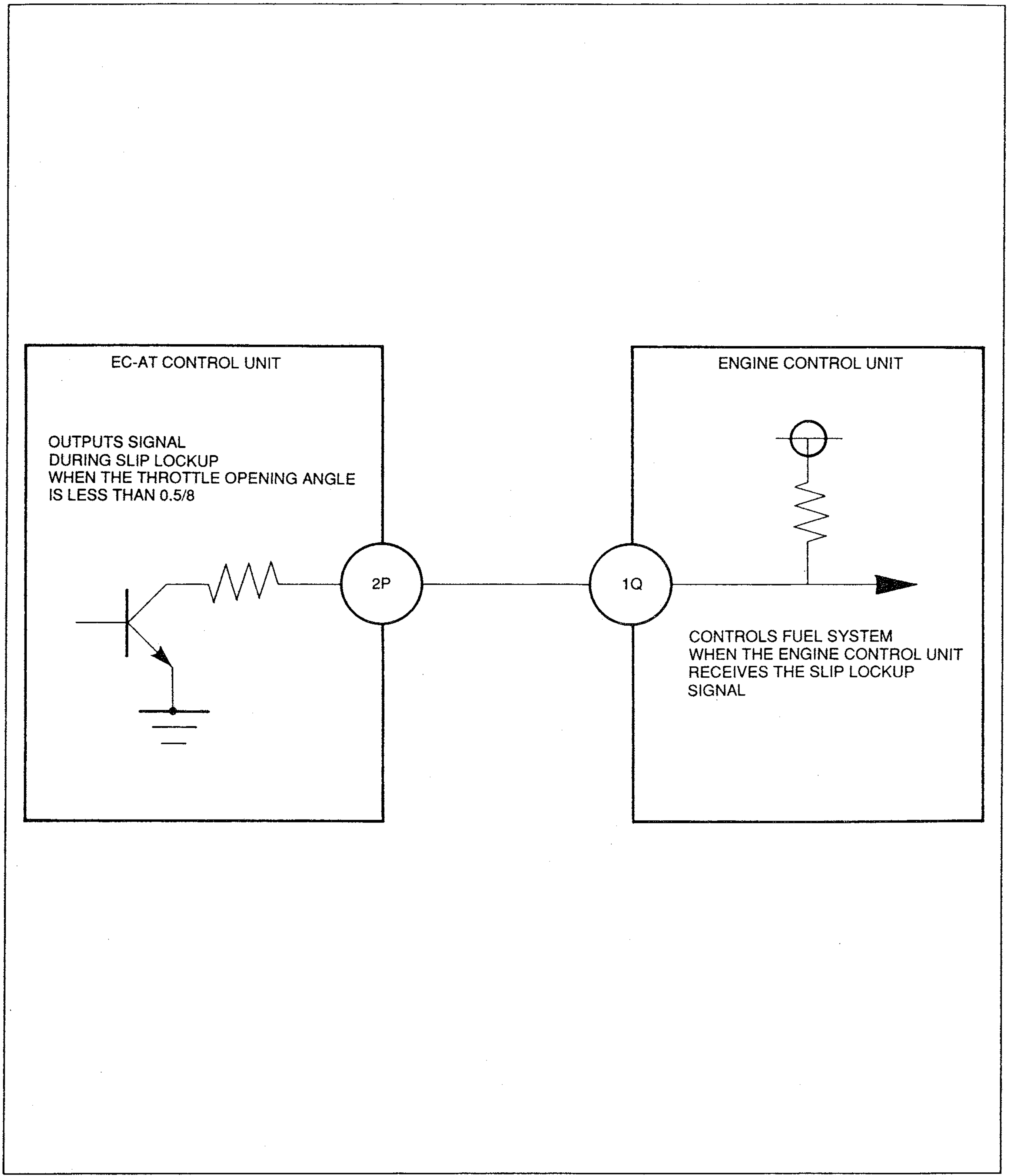

- During slip lockup control when the throttle opening angle is less than 0.5/8, the EC-AT control unit outputs the slip lockup signal to the engine control unit (ECU).
  When the ECU receives the slip lockup signal, the ECU controls the fuel system to reduce the shift shock when deceleration.
- The EC-AT control unit terminal 2P is used for the slip lockup signal and the reduce torque signal.

CONTROL SYSTEM

EC-AT CONTROL UNIT

- The EC-AT control unit functions are basically the same as for the 1992 929 EC-AT, however, some control functions are changed to improve drivability and serviceability.

Mode Selection Control

- In D range there are four modes are available "HOLD" "POWER" "NORMAL A/C ON" "NORMAL A/C OFF", which are the same as the 1992 929 EC-AT.
- In S and L ranges, there are three modes are available "HOLD" "POWER" "NORMAL".
- The auto power control is also featured.

Note

- **Once the POWER mode is selected, the EC-AT control unit does not switch to NORMAL mode until the ignition switch is turned OFF.**

Some new functions are added as follows

- To improve vehicle performance, the EC-AT control unit selects the low ATF temperature mode under the following all conditions:
  (1) In the period shortly after the engine is started
  (2) When D range is selected
  (3) When the ATF temperature is less than 40°C {104°F}

Note

- **The shift points during the low ATF temperature mode are higher than in the POWER mode.**

- When the engine coolant temperature is above 115°C {239°F}, the lockup points are lowered to aid engine cooling.

Shift Control

O/D inhibition conditions are changed as follows.
O/D will be inhibited when either of the following conditions is met:

- O/D inhibit signal (auto speed control [ASC]) is ON
  (1) When the vehicle speed drops more than 8 km/h {5 MPH} below the set speed while cruise control is in use.
  (2) When the RESUME/ACCEL switch is pressed.
- ATF temperature is below 10°C {50°F}
- ATF temperature is below 38°C {100°F} and vehicle speed is below 63 km/h {39 MPH}

Engine Braking Control

The overrunning clutch engagement conditions are changed as follows.
The overrunning clutch is engaged when the following conditions are met:

Range	D		S		L
Mode	NORMAL A/C OFF	HOLD	Except HOLD	HOLD	—
Gear position	1st, 2nd, 3rd	2nd, 3rd	1st, 2nd, 3rd	2nd, 3rd	1st, 2nd
Condition	Engaged when throttle opening angle is below 1.3/8 and vehicle speed is above 10 km/h {6.2 MPH}		Engaged when throttle opening angle is below 1.3/8		Constantly engaged

Note

- **In D or S range 1st gear, engine braking is not available because the low and reverse brake does not engage. Also, the overrunning clutch does not engage in O/D, but engine braking is available.**

37U0KX-515

Lockup Control

Lockup inhibition conditions are changed as follows.
Complete lockup and slip lockup are inhibited when any of the following conditions are met:

Complete lockup inhibition conditions

- Transmission is in 3rd gear position and ATF temperature is below 38°C {100°F}
- Transmission is in O/D gear position and ATF temperature is below 20°C {68°F}

Slip lockup inhibition conditions

- ATF temperature is above 100°C {212°F}
- ATF temperature is below 50°C {122°F}
- Slip lockup OFF signal is ON
- Accelerator pedal is depressed abruptly
  (throttle opening angle changes more than 0.3/8 in less than 0.08 second)
- Transmission is in O/D gear position and idle signal is ON.
- Transmission is in 3rd gear position and idle signal is ON and vehicle speed is below 140 km/h {87 MPH}

Self-Diagnosis Function

- The self-diagnosis function is the same as the 1992 929 EC-AT, however, service code number 58 "atmospheric pressure sensor" is added.
  When the atmospheric pressure sensor is not input from the engine control unit, the EC-AT control unit registers code number 58 and warns the driver by flashing the hold indicator.

37U0KX-516

OIL COOLER

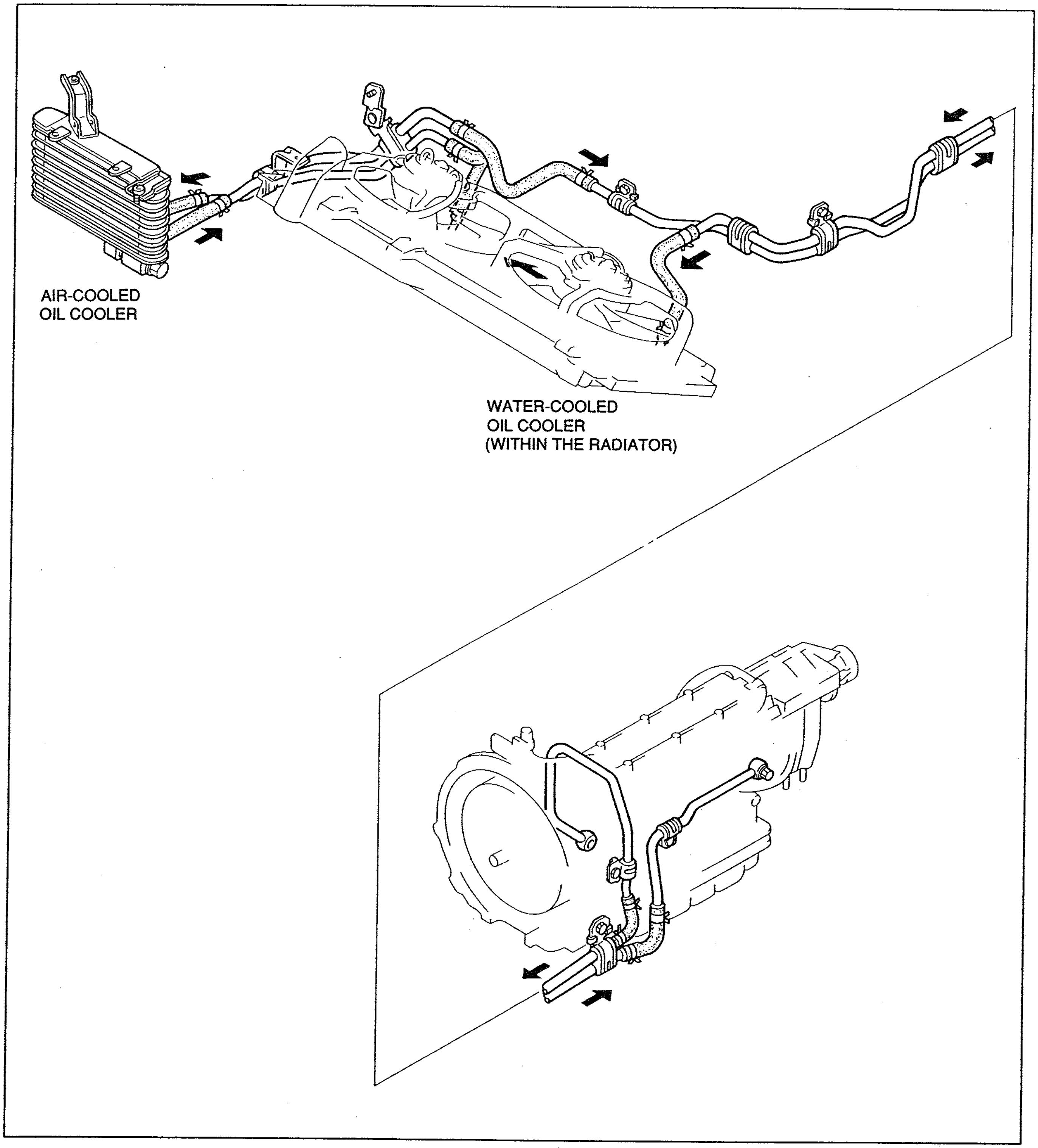

The automatic transmission is equipped with an air-cooled oil cooler, in addition to a water-cooled oil cooler (within the radiator), for improved ATF cooling performance. The ATF flows as shown below.

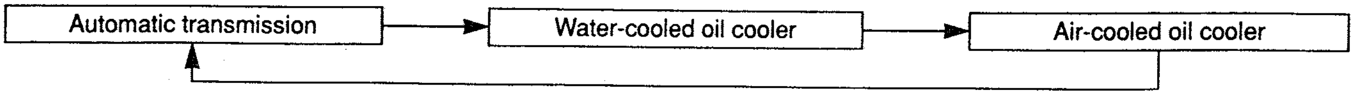

SHIFT-LOCK SYSTEM

OUTLINE

1. The automatic transmission also features a shift-lock system for improved safety.
   This system's operation is the same as the 1992 RX-7, but the components are redesigned for 1993 RX-7.
2. The shift-lock system is composed of the shift-lock actuator, P-range switch, and lock lever. The shift-lock actuator is changed to a solenoid type to reduce shift-lock operation noise, and the shift-lock control unit is separated from the actuator (solenoid).
3. A shift-lock release system, which releases the selector lever lock when insert the screwdriver provided in the tool kit to the emergency override hole and pressed down, is featured as a shift-lock system fail-safe.
4. The key interlock system, which prevents the ignition key from being turned to LOCK position when the selector lever is in other than P range, is the same as for the 1992 RX-7, however, a key interlock solenoid is used instead of an interlock cable to lock the key cylinder.

37U0KX-517

SHIFT-LOCK SYSTEM COMPONENTS

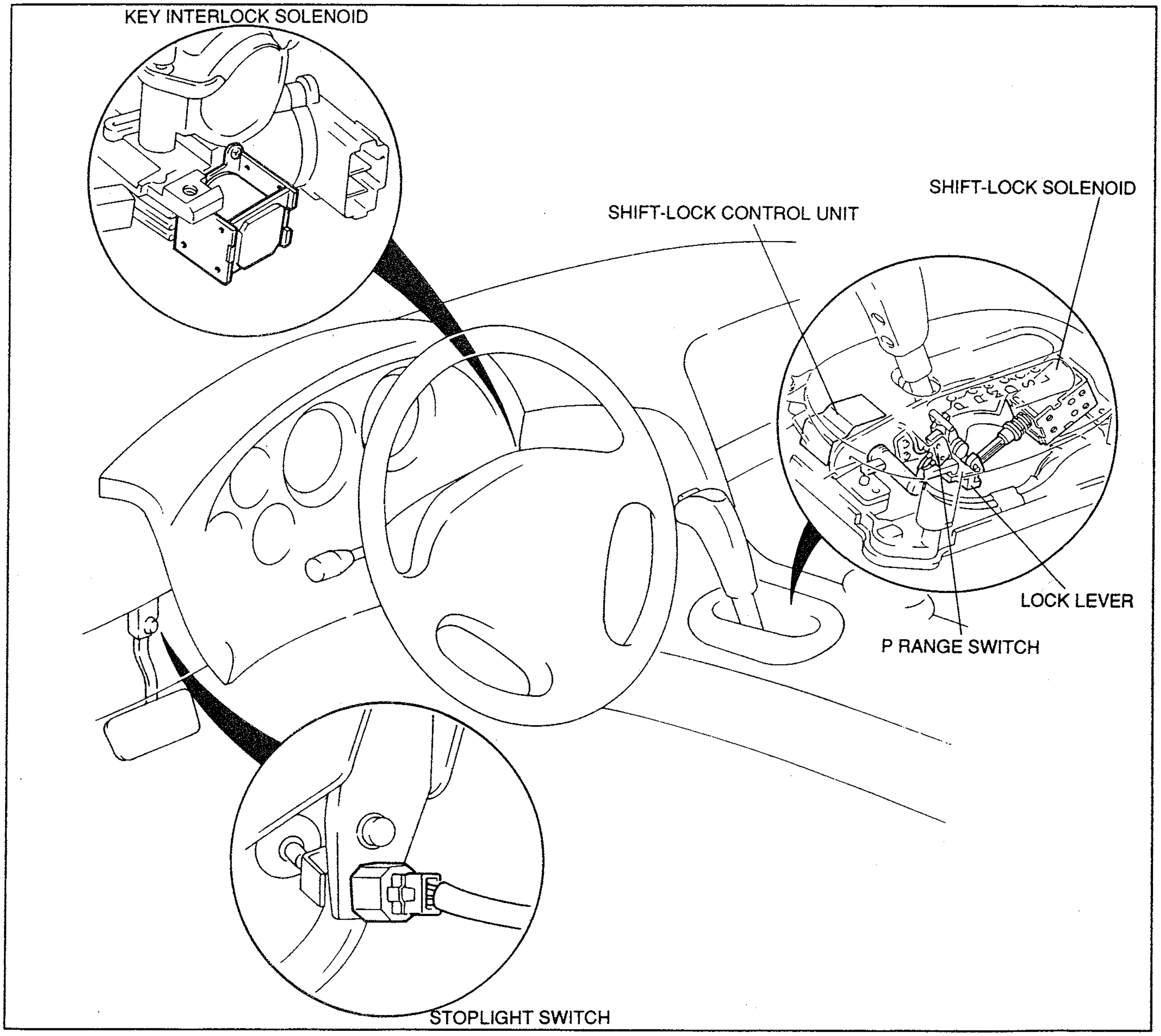

37U0KX-518

SHIFT-LOCK SYSTEM

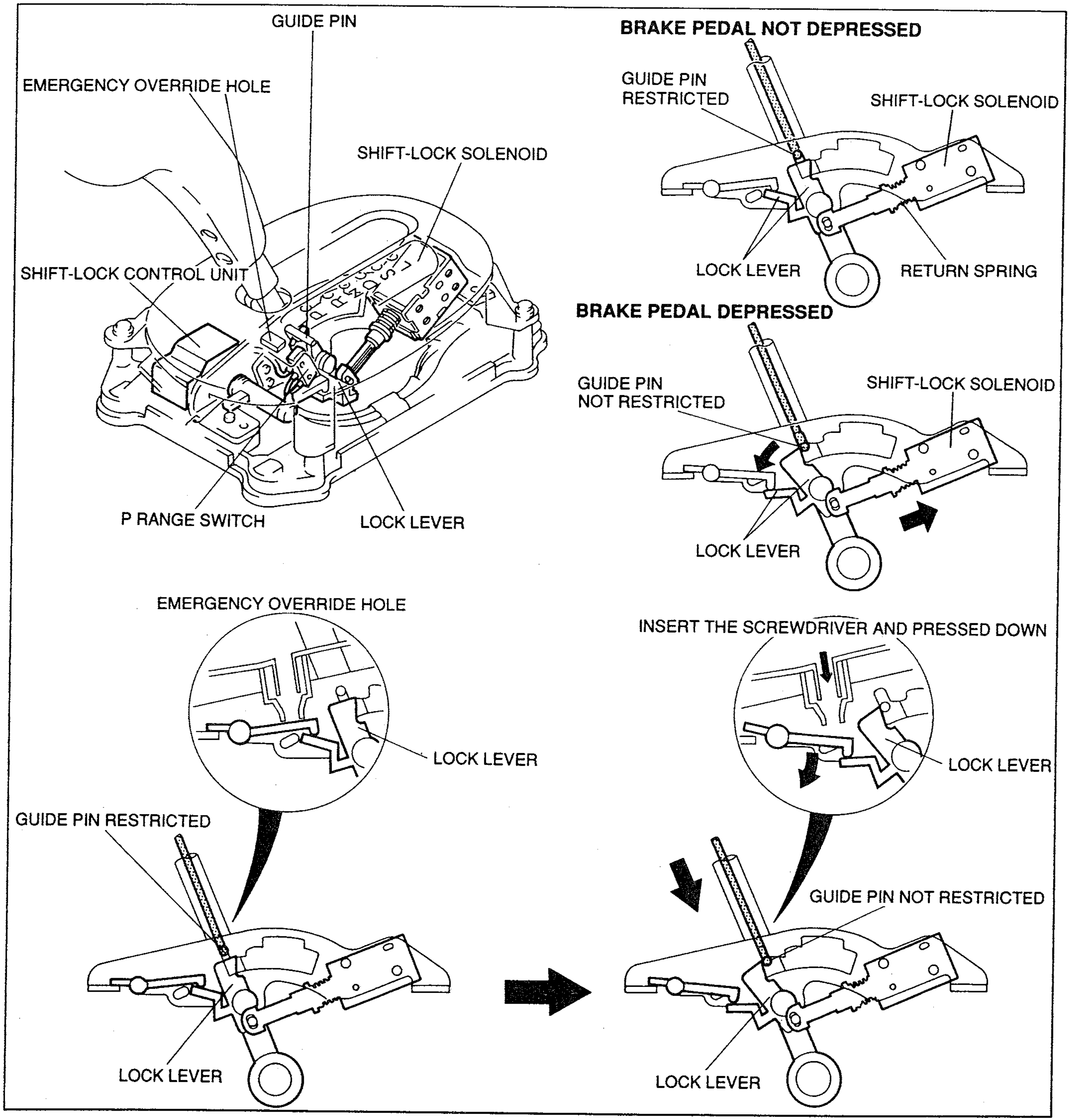

37U0KX-519

Shift-Lock System

- The shift-lock system, which is composed of the shift-lock solenoid, P-range switch, and lock lever, is controlled by the shift-lock control unit.
- When the brake pedal is depressed with the selector lever is in P range and the ignition switch is ON, the relays in the shift-lock control unit cause current to flow to the shift-lock solenoid, moving the lock lever to the release side.
- When there is no current to the shift-lock solenoid, the lock lever is held in the lock position by the return spring.

Shift-Lock Release System

- When the screwdriver is inserted into the emergency override hole and pressed down, the lock lever releases the guide pin, enabling gear selection.

KEY INTERLOCK SYSTEM

SELECTOR LEVER IS IN P RANGE

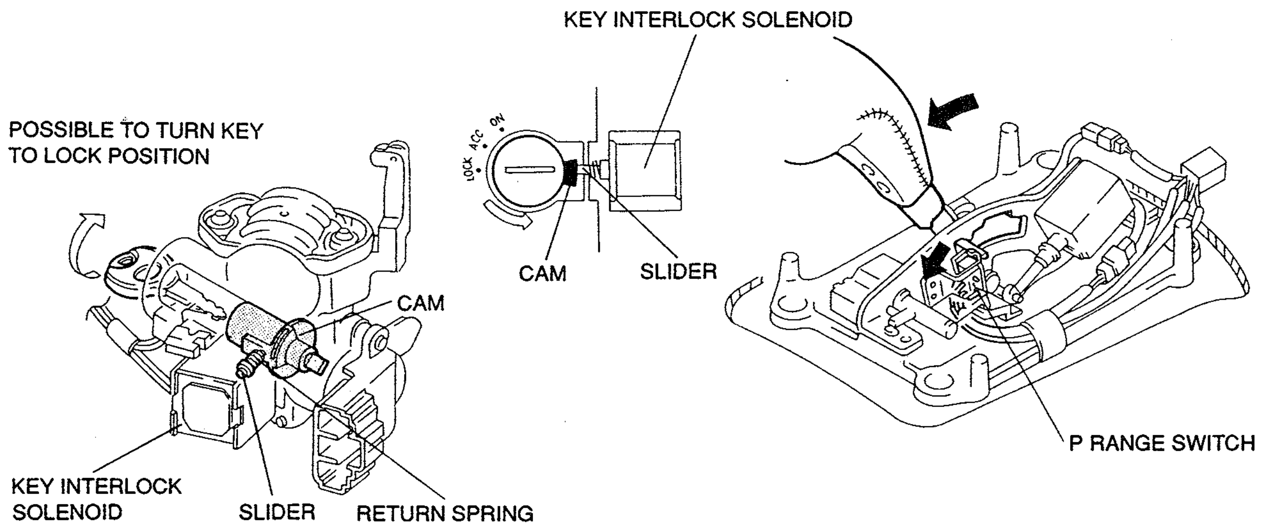

SELECTOR LEVER IS IN RANGES OTHER THAN P

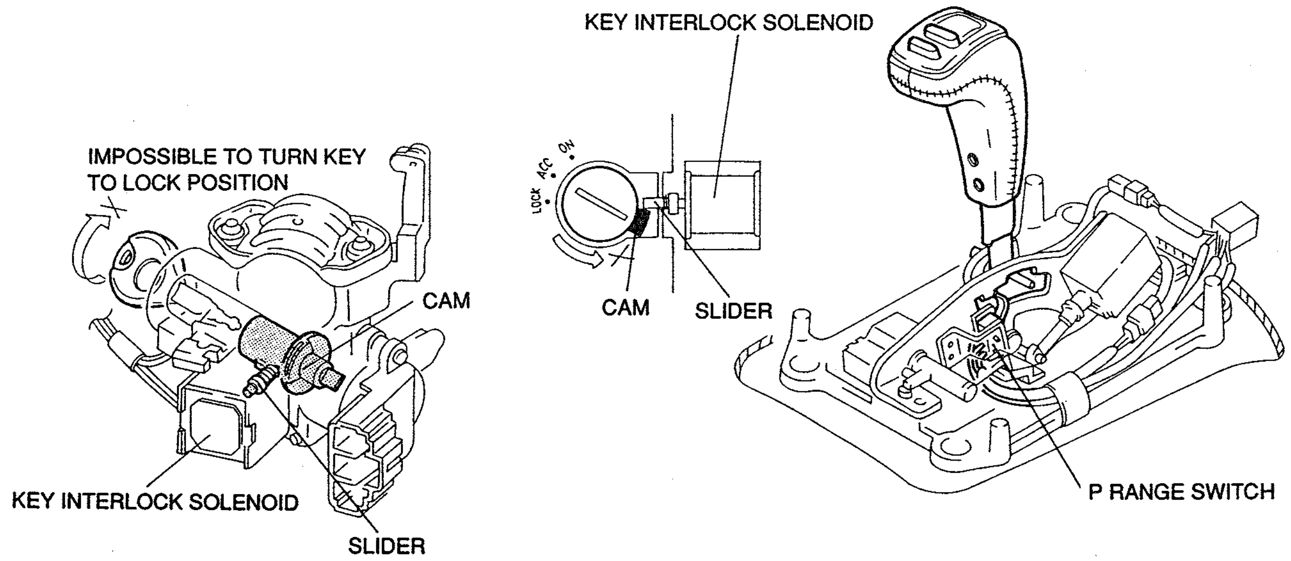

37U0KX-520

Construction

The key interlock system is composed of the key interlock solenoid, P-range switch, slider, cam, and return spring.

This system controls the movement of the key cylinder via the slider and the key interlock solenoid installed on the key cylinder.

Operation

P range (no current flow to key interlock solenoid)

When the selector lever is in P range, the P-range switch is OFF and no current flows to the key interlock solenoid.

Because the slider is pulled back by the return spring, the cylinder can be turned to the LOCK position.

Ranges other than P (current flow to key interlock solenoid)

When the selector lever is in ranges other than P, the P-range switch is ON and current flows to the key interlock solenoid, pushing the slider toward the key cylinder.

Because the cam hits against the slider, the cylinder cannot be turned to LOCK position.

SERIVCE POINTS

OUTLINE

- In 1993 RX-7, there are three testers are available to check the EC-AT system as shown in the chart below.

Item \ Tester	DT-S 1000	Self-Diagnosis Checker	Engine Signal Monitor
Self-diagnosis function (Service code number)	○	○	
Electrical signal inspection	○		
EC-AT control unit terminal voltage			○

Self-Diagnosis Function (Service Code Number)

- When checking the service code number of the self-diagnosis function which is memorized in the EC-AT control unit, the new **DT-S 1000** or the **Self-Diagnosis Checker** is available.

Note

- **The service code number checking procedure with the Self-Diagnosis Checker is the same as the 1992 929.**

Electrical Signal Inspection

- When inspecting the electrical signal of the EC-AT control unit, the new **DT-S 1000** is available.
- The **DT-S 1000** checks for proper operation of various switches and sensors in the EC-AT system, and also checks the EC-AT control unit for output the various control signals.

EC-AT Control Unit Terminal Voltage

- When inspecting the EC-AT control unit terminal voltage, the **Engine Signal Monitor** is available.

Note

- **The EC-AT control unit terminal voltage inspection procedure with the Engine Signal Monitor is the same as the 1992 929.**
- **The new DT-S 1000 is also available for inspecting the EC-AT control unit terminal voltage.**

37U0KX-521

SELF-DIAGNOSIS FUNCTION

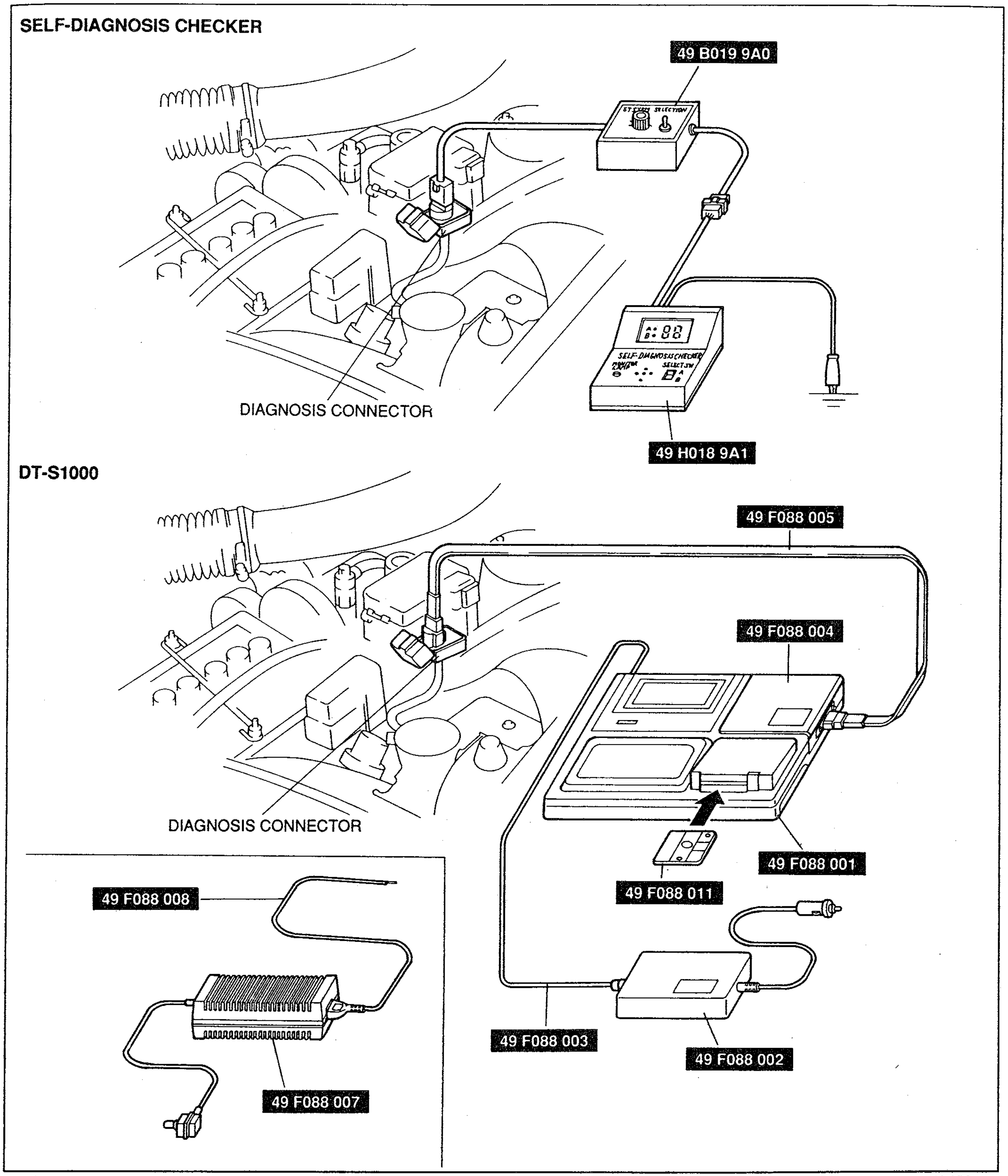

37U0KX-522

Description

The self-diagnosis system integrated in the EC-AT control unit diagnoses malfunction of the main sensors (input/output) and solenoid valves (output) and the EC-AT control unit itself.

Malfunctions or intermittent malfunctions are memorized in the EC-AT control unit to later be output as service codes.

The new **DT-S 1000** or the **Self-Diagnosis Checker** is available to retrieve these service code numbers.

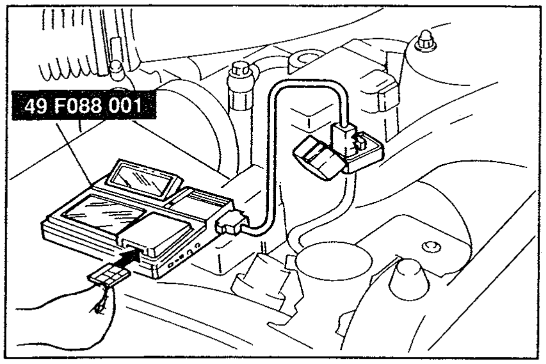

37U0KX-523

Service Code Number Inspection Procedure
DT-S 1000

1. Assemble the **DT-S 1000**. (Refer to page K–25.)
2. Connect the **DT-S 1000** to the diagnosis connector.

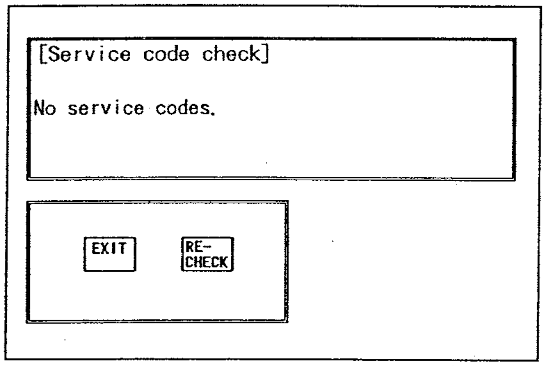

[Service code check]

No service codes.

37U0KX-524

3. Select the self-diagnosis function from the DT-S 1000 display.
4. Verify that any service code numbers are displayed.

Note

- **When there is more than one malfunction, each service code is displayed one time in numerical order starting from the lowest number.**

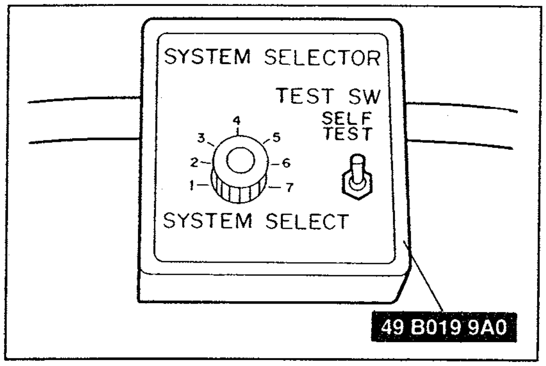

37U0KX-525

Self-Diagnosis Checker

1. Connect the **System Selector** to the diagnosis connector.
2. Set the SYSTEM SELECT switch to position 2.
3. Set the TEST SW to SELF TEST position.

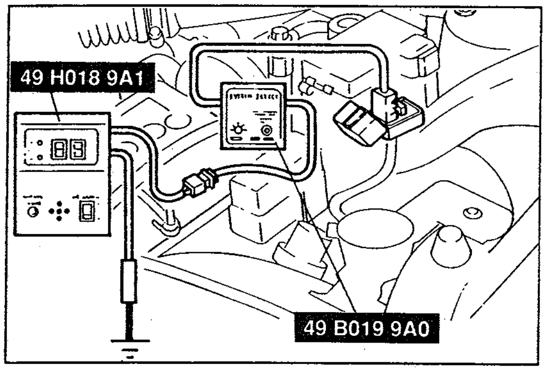

37U0KX-526

4. Connect the **Self-Diagnosis Checker** to the **System Selector**.
5. Set the SELECT SW to position A.
6. Turn the ignition switch ON and check for any service code number(s).

ELECTRICAL SIGNAL INSPECTION

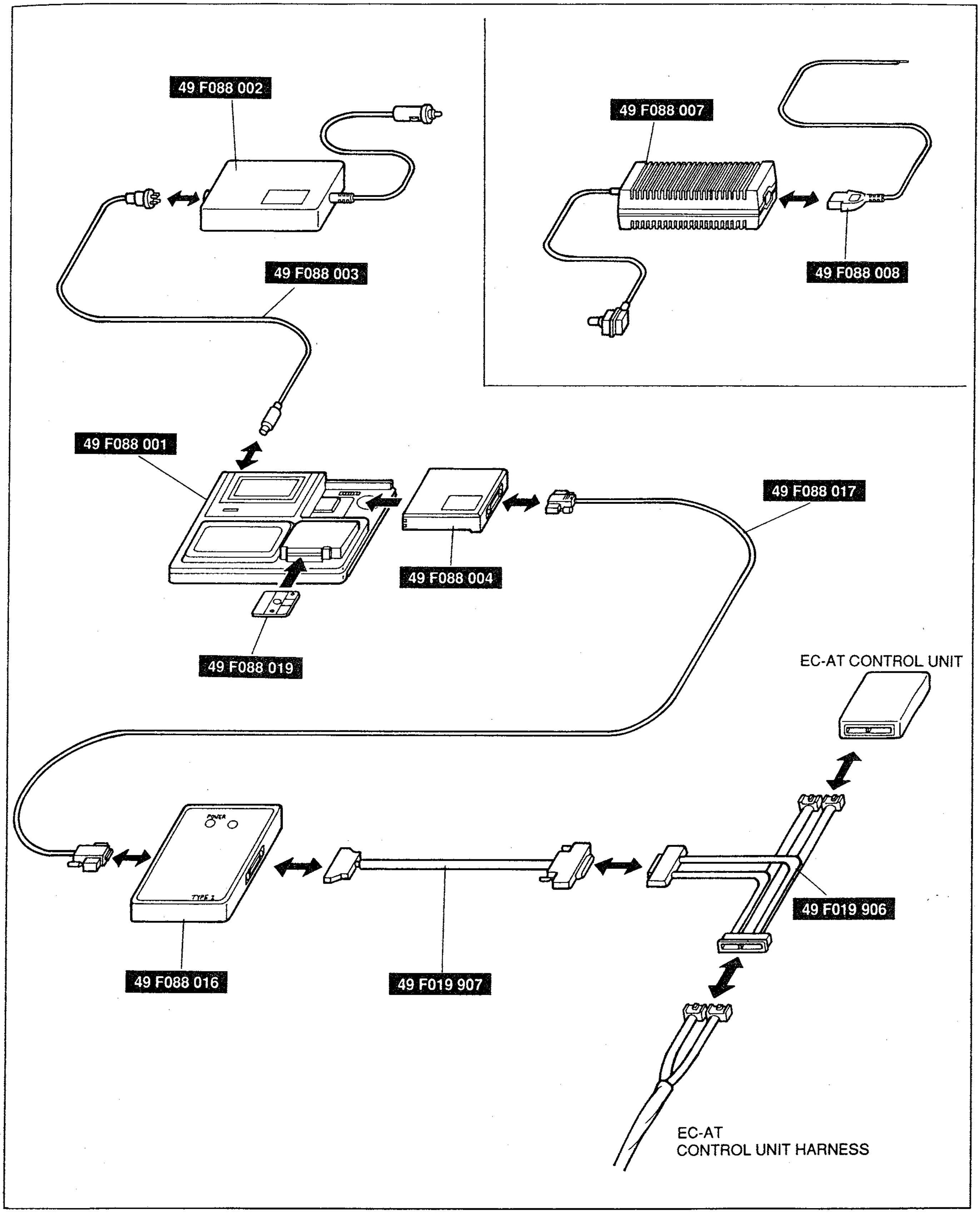

37U0KX-527

Description

For easy troubleshooting of the EC-AT control unit input and output signals, a **DT-S 1000** is required. The **DT-S 1000** checks for proper operation of various switches and sensors in the EC-AT system, and also checks the EC-AT control unit for output the various control signals.

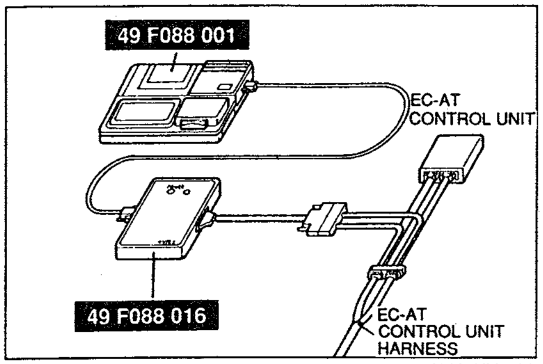

37U0KX-528

Inspection Procedure

Input/Output signal monitor function

1. Assemble the **DT-S 1000**. (Refer to page K–27.)
2. Disconnect the negative battery cable and connect the **DT-S 1000** to the EC-AT control unit.
3. Reconnect the negative battery cable.

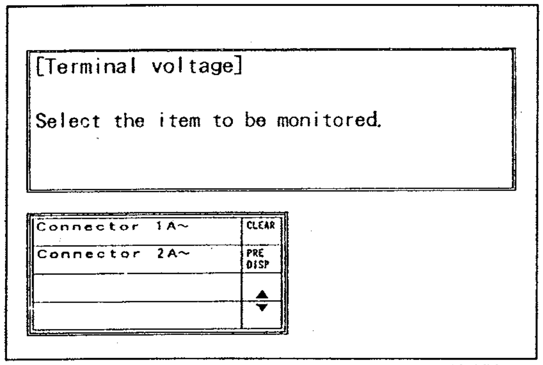

```
[Terminal voltage]

Select the item to be monitored.
```

```
Connector  1A~
Connector  2A~
```

37U0KX-529

4. Select the input/output signal monitor function from the DT-S 1000 display.

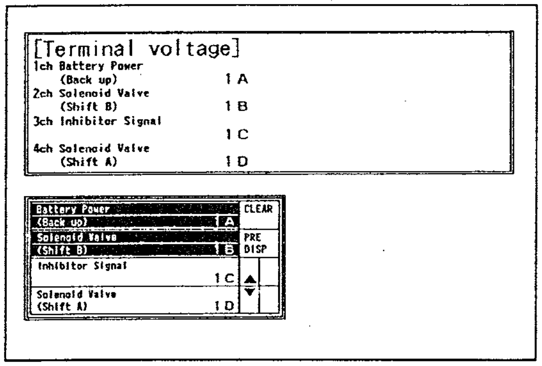

```
[Terminal voltage]
1ch Battery Power
     (Back up)            1 A
2ch Solenoid Valve
     (Shift B)            1 B
3ch Inhibitor Signal
                          1 C
4ch Solenoid Valve
     (Shift A)            1 D
```

```
Battery Power
(Back up)            1 A
Solenoid Valve
(Shift B)            1 B
Inhibitor Signal
                     1 C
Solenoid Valve
(Shift A)            1 D
```

37U0KX-530

Note

- **The maximum selection item is 8.**

5. Select the inspection item (terminal No.).
6. Verify indication of the respective data item in each condition, referring to the EC-AT control unit terminal voltage chart.

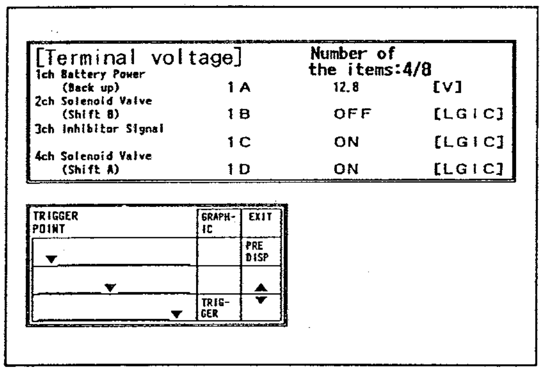

```
[Terminal voltage]              Number of
                                the items:4/8
1ch Battery Power
     (Back up)            1 A     12.8       [V]
2ch Solenoid Valve
     (Shift B)            1 B     OFF        [LGIC]
3ch Inhibitor Signal
                          1 C     ON         [LGIC]
4ch Solenoid Valve
     (Shift A)            1 D     ON         [LGIC]
```

37U0KX-531

⟨Example⟩

When checking the solenoid valve pattern at each gear position, and the overrunning clutch (engine braking) control, the following steps are available.

Step 1

Select the solenoid valve (shift A), solenoid valve (shift B), and solenoid valve (overrunning clutch).

Step 2

Drive the vehicle and verify that the ON/OFF (battery voltage/0V) pattern of the solenoid valve (shift A, and B) are same as the solenoid valve operation table, and engine braking is operate when solenoid valve (overrunning clutch) is ON (battery voltage).

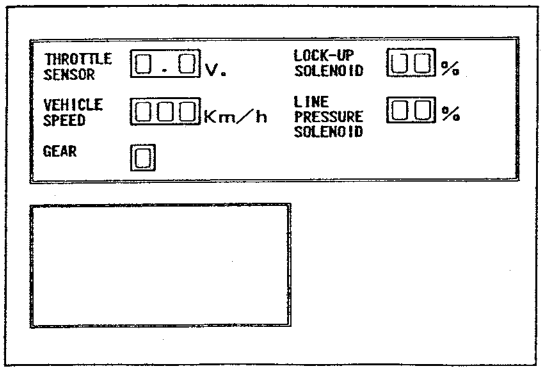

```
THROTTLE SENSOR  0.0 V.        LOCK-UP SOLENOID          00 %
VEHICLE SPEED    000 Km/h      LINE PRESSURE SOLENOID    00 %
GEAR             0
```

37U0KX-532

Shifting check monitor function

1. Assemble the **DT-S 1000**. (Refer to page K–27.)
2. Disconnect the negative battery cable and connect the **DT-S 1000** to the EC-AT control unit.
3. Reconnect the negative battery cable.
4. Select the shifting check monitor function from the DT-S 1000 display.
5. Drive the vehicle and verify the shift point, lockup point, and shift schedule.

DT-S 1000 Monitor Item Chart

By using the **DT-S 1000**, following input/output signals to/from the EC-AT control unit signal can be checked.

Terminal	Input or Output	Component	DT-S 1000 function		
			Input/output signal monitor	Shifting check monitor	Remark
1A	—	Battery power (backup)	○ (Voltage)		
1B	Output	Solenoid valve (shift B)	○ (Voltage)	○ (Gear position)	Solenoid valve pattern can be checked DT-S1000 displayed gear position is calculated by signals received from solenoid valves (shift A, shift B)
1C	Output	Inhibitor signal	○ (Voltage)		
1D	Output	Solenoid valve (shift A)	○ (Voltage)	○ (Gear position)	Solenoid valve pattern can be checked DT-S1000 displayed gear position is calculated by signals received from solenoid valves (shift A, shift B)
1E	Input	Inhibitor switch (R range)	○ (Voltage)		
1F	Output	Solenoid valve (line pressure)	○ (Duty; %)	○ (Duty; %)	Output duty ratio can be checked
1G	Input	Engine rpm signal	○ (rpm)		Engine rpm signal can be checked
1H	Output	Dropping resistor	○ (Duty; %)		Output duty ratio can be checked
1I	Input	Speed sensor 2 (Speedometer sensor)	○ (km/h)		Vehicle speed signal (backup signal) can be checked
1J	—	Ground (EC-AT control unit)	○ (Voltage)		
1K	Output	Hold indicator	○ (Voltage)		
1L	Input	A/C signal	○ (Voltage)		
1M	Output	Solenoid valve (lockup)	○ (Duty; %)	○ (Duty; %)	Output duty ratio can be checked
1N	—	Battery power (main)	○ (Voltage)		
1O	Output	Solenoid valve (overrunning clutch)	○ (Voltage)		Solenoid valve pattern can be checked
1P	—	Battery power (main)	○ (Voltage)		
2A	Input	Throttle sensor (Vref)	○ (Voltage)		
2B	Input	Inhibitor switch (D range)	○ (Voltage)		
2C	Input	Atmospheric pressure sensor	○ (Voltage)		
2D	Input	Inhibitor switch (P, N range)	○ (Voltage)		
2E	Input	Pulse generator	○ (rpm)		Input shaft rpm signal can be checked
2F	Output	Solenoid valve (lockup control)	○ (Voltage)		Solenoid valve pattern can be checked
2G	Input	Slip lockup OFF signal	○ (Voltage)		
2H	Input	Torque reduced signal	○ (Voltage)		
2I	Input	Hold switch	○ (Voltage)		
2J	Input	Speed sensor 1 (revolution sensor)	○ (Vehicle speed; km/h)	○ (Vehicle speed; km/h)	Vehicle speed signal (main signal) can be checked

(   ) indicates DT-S 1000 display unit.

Terminal	Input or Output	Component	DT-S 1000 function		
			Input/output signal monitor	Shifting check monitor	Remark
2K	Input	TAT terminal/O/D inhibit signal (ASC signal)	○ (Voltage)		
2L	—	Ground (input signal)	○ (Voltage)		
2M	Input	Idle signal	○ (Voltage)		
2N	Input	Water thermoswitch/ Mileage switch	○ (Voltage)		
2O	Input	Stoplight switch	○ (Voltage)		
2P	Output	Reduce torque signal/ Slip lockup signal	○ (Voltage)		
2Q	Input	Inhibitor switch (L range)	○ (Voltage)		
2R	Input	ATF thermosensor	○ (Voltage)		
2S	Input	Inhibitor switch (S range)	○ (Voltage)		
2T	Input	Throttle sensor (TVO)	○ (Voltage)	○ (Voltage)	Throttle opening angle can be checked

(   ) indicates DT-S 1000 display unit.

37U0KX-533

EC-AT CONTROL UNIT TERMINAL VOLTAGE

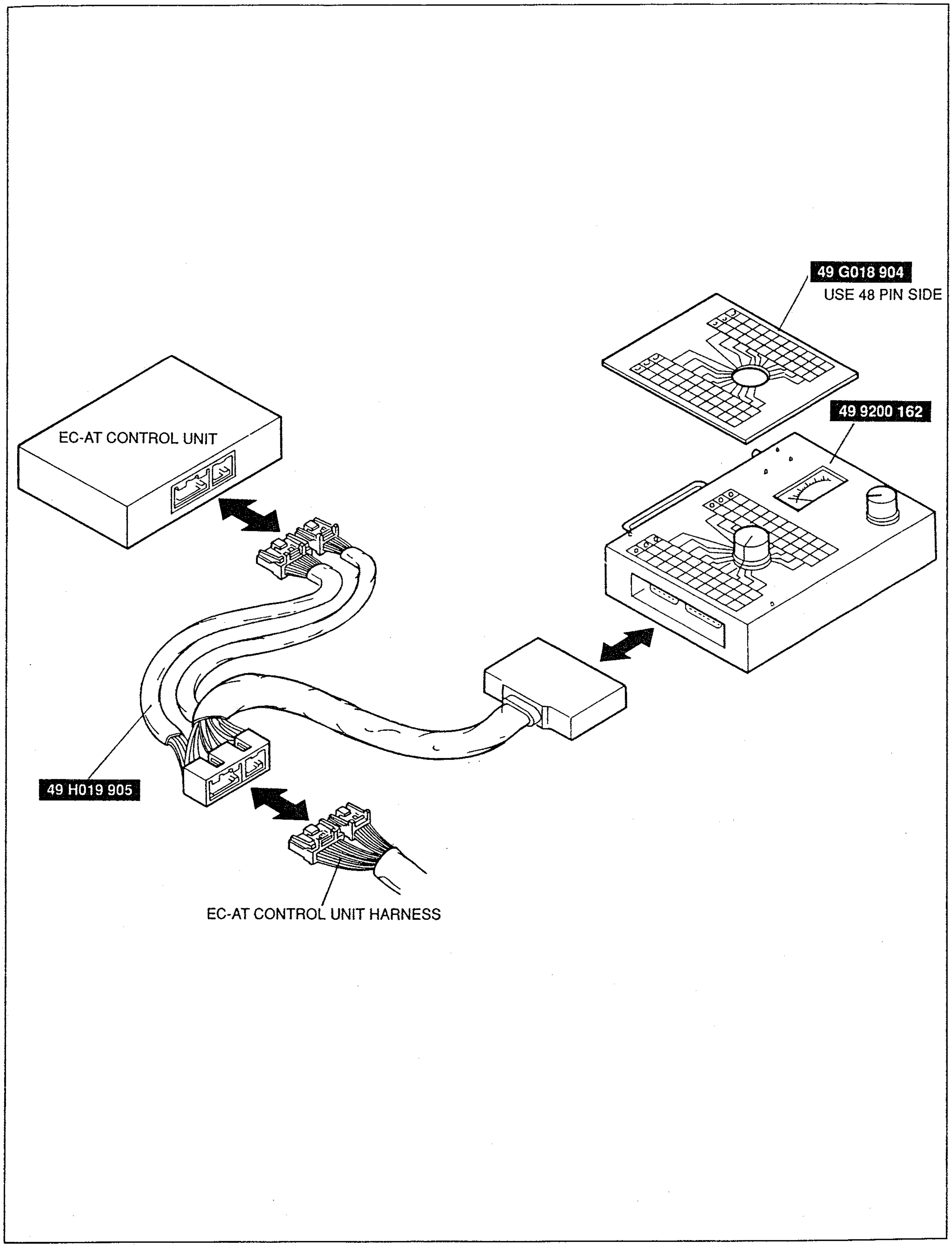

When inspecting the EC-AT control unit terminal voltage, the **Engine Signal Monitor** is available.

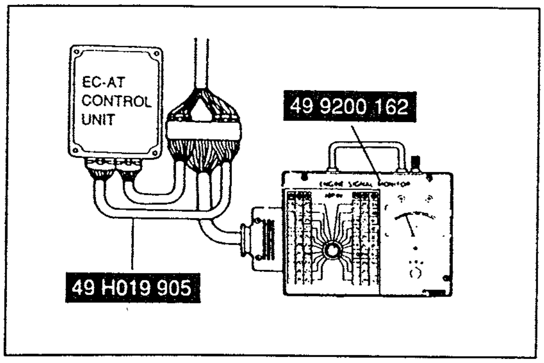

37U0KX-535

Inspection Procedure

1. Disconnect the EC-AT control unit connectors.
2. Connect the **Engine Signal Monitor** and **Adapter Harness** to the EC-AT control unit as shown.

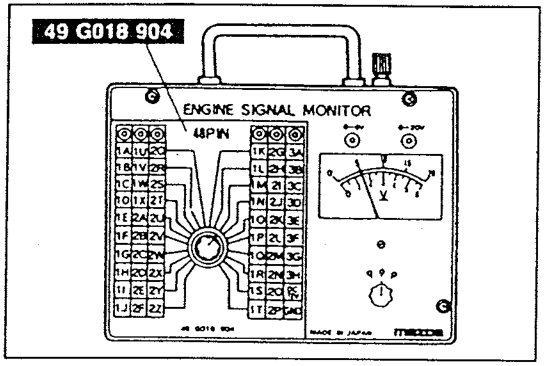

37U0KX-536

3. Place the **Sheet** on the **Engine Signal Monitor**.
4. Measure the voltage at each terminal.
5. If any EC-AT control unit terminal voltage is incorrect, check the related input or output devices and wiring. If no problem is found, replace the EC-AT control unit.

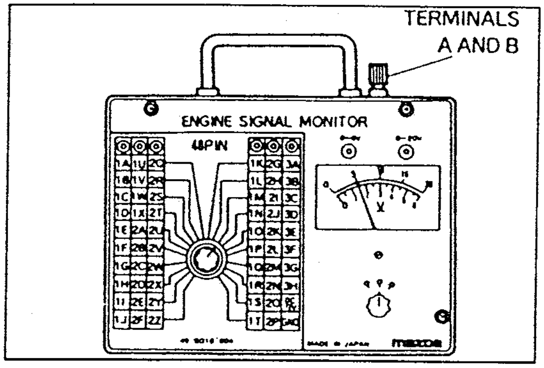

19G0KX-821

Caution

- **Never apply voltage to SST terminals A and B.**

PROPELLER SHAFT

37U0LX-501

OUTLINE

- The propeller shaft is a one-piece structure that employs a caulking-type fixing method for the universal joint for improved reliability.
- The propeller shaft pipe is friction welded for improved marketability.

37U0LX-502

FEATURES

Reduced size and weight	Friction welding	L–3
Improved marketability	Friction welding	L–3

37U0LX-503

SPECIFICATIONS

Item / **Engine/Transmission**	**13B Turbo**	
	R15M-D (MT)	**RB4A-EL (AT)**
Length mm {in}	863 {33.98}	875 {34.45}
Outer diameter mm {in}	75 {3.0}	

37U0LX-504

PROPELLER SHAFT

- The universal joint is sealed by a caulking-type fixing method for improved reliability.
- The propeller shaft pipe is friction welded, providing uniform welding of joints. By adopting this system, marketability has been improved and thermal deformation lowered when compared with that of conventional arch welding. Additionally, configurations of each propeller shaft component have been reviewed to reduce size and weight.

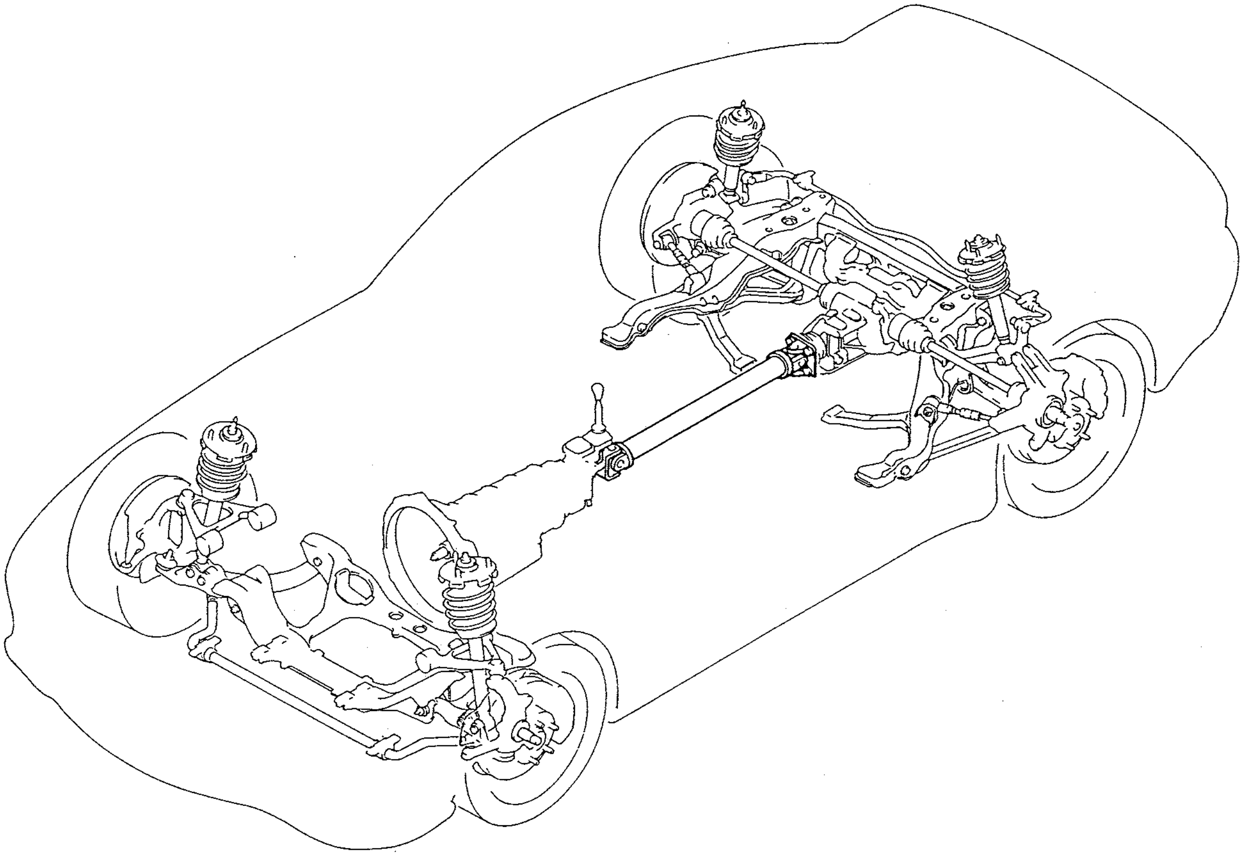

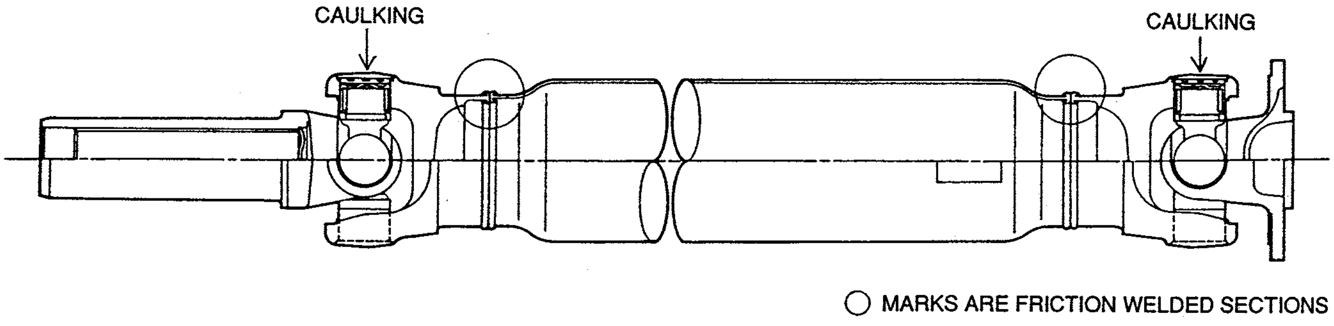

37U0LX-505

FRONT AND REAR AXLES

37U0MX-501

"TORSEN" is a registered trademark of ZEXEL-GLEASON USA. INC

OUTLINE

OUTLINE OF CONSTRUCTION

- Low resistance, unitized angular ball bearings are used for the front and rear wheel bearings for all models to improve serviceability and drivability.
- The drive shaft has a tripod joint on the differential side and a bell joint on the wheel side to reduce noise and vibration and to improve durability.
- An intergal carrier differential is used for all models to reduce noise and vibration. With the intergal carrier differential, the side bearings that support the differential case are mounted within the intergal carrier for improved strength.
- A torque sensing limited-slip differential ("TORSEN" LSD) is standard equipment for all models to improve drivability and stability.

37U0MX-502

STRUCTURAL VIEW

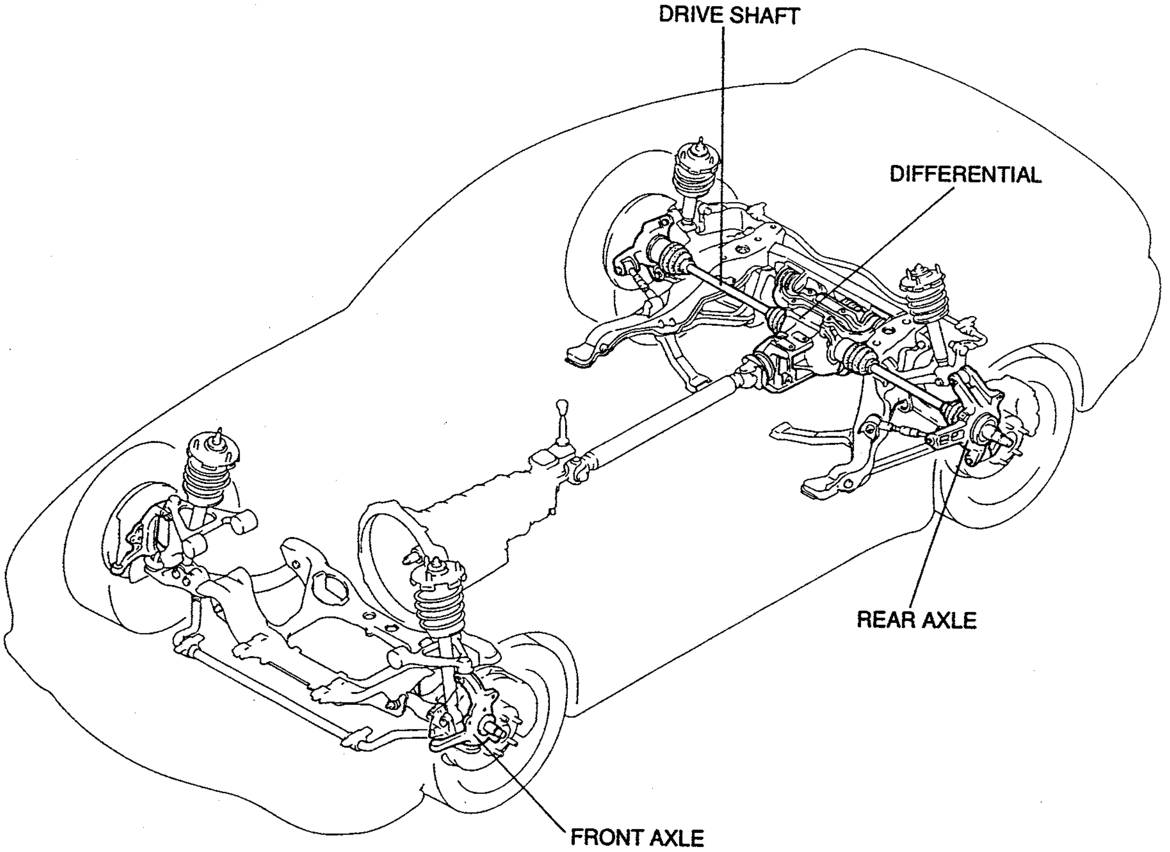

37U0MX-503

SPECIFICATIONS

Engine/Transmission Item		13B	
		MT	AT
Drive shaft			
Joint type	Wheel side	Bell joint	
	Differential side	Tripod joint	
Length mm {in} (between centers of joints)	Left side	484.2 {19.06}	
	Right side	484.2 {19.06}	
Shaft diameter mm {in}		29.0 {1.14}	
Differential			
Ring gear size mm {in}		204.2 {8.038}	
Final gear ratio		4.100	3.909
Reduction gear		Hypoid gear	
Differential gear		Worm gear	
Ring gear teeth		41	43
Drive pinion gear teeth		10	11
Oil	Grade	API Service GL-4 or 5	
	Viscosity	Above –18°C {0°F}: SAE 90 Below –18°C {0°F}: SAE 80	
	Capacity L {US qt, Imp qt}	1.30 {1.38, 1.14}	

37U0MX-504

FRONT AXLE

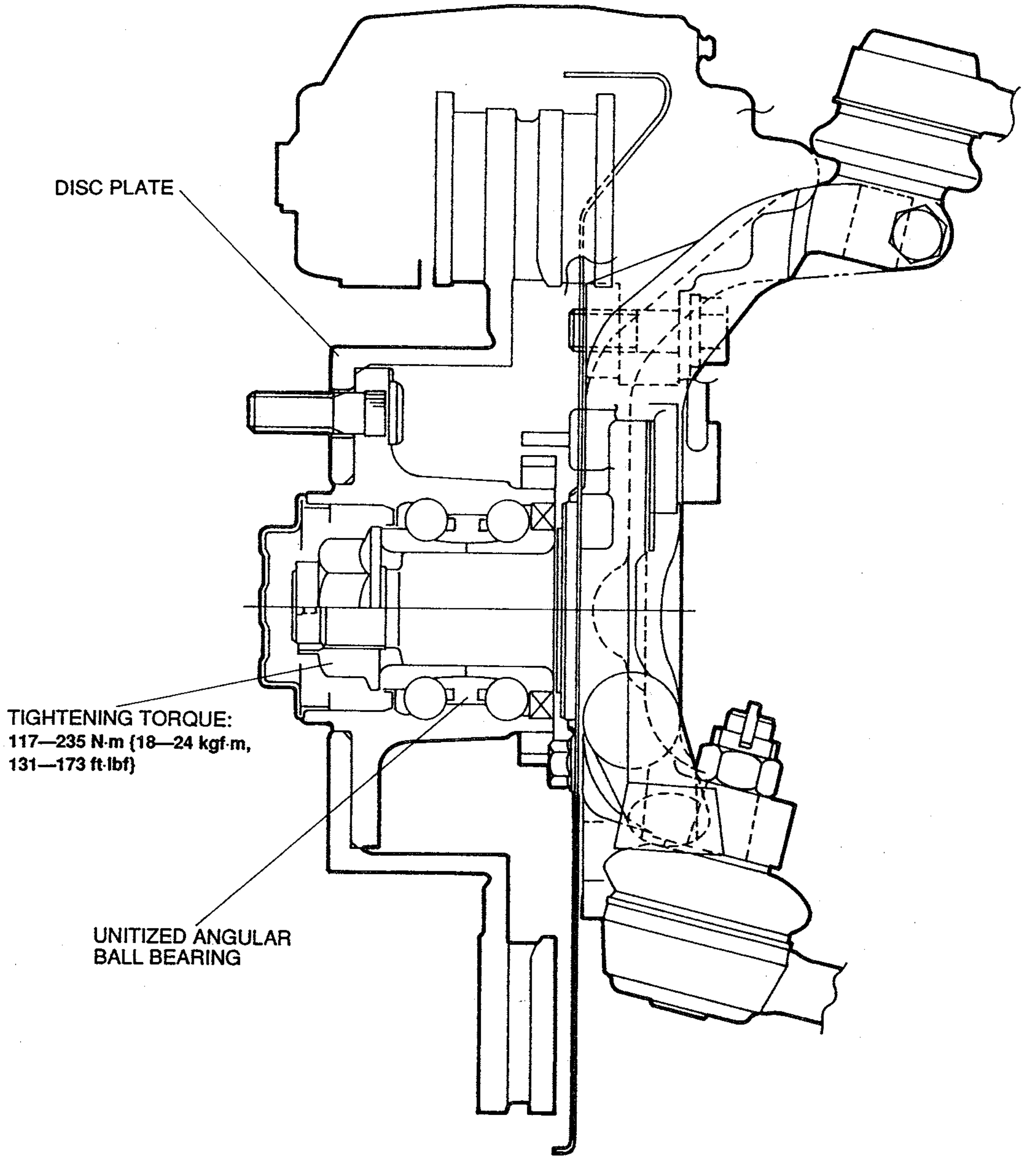

37U0MX-505

- The disc plate is held in place by the wheel lug nuts, making removal and installation easier and reducing wheel hub weight.
- The unitized angular ball bearing assembly, which has low rotational resistance, improves serviceability.
  With this type of bearing, the preload is easily set by tightening the wheel hub nut to the specified torque. Another merit of this bearing is that it withstands large thrust loads.

REAR AXLE

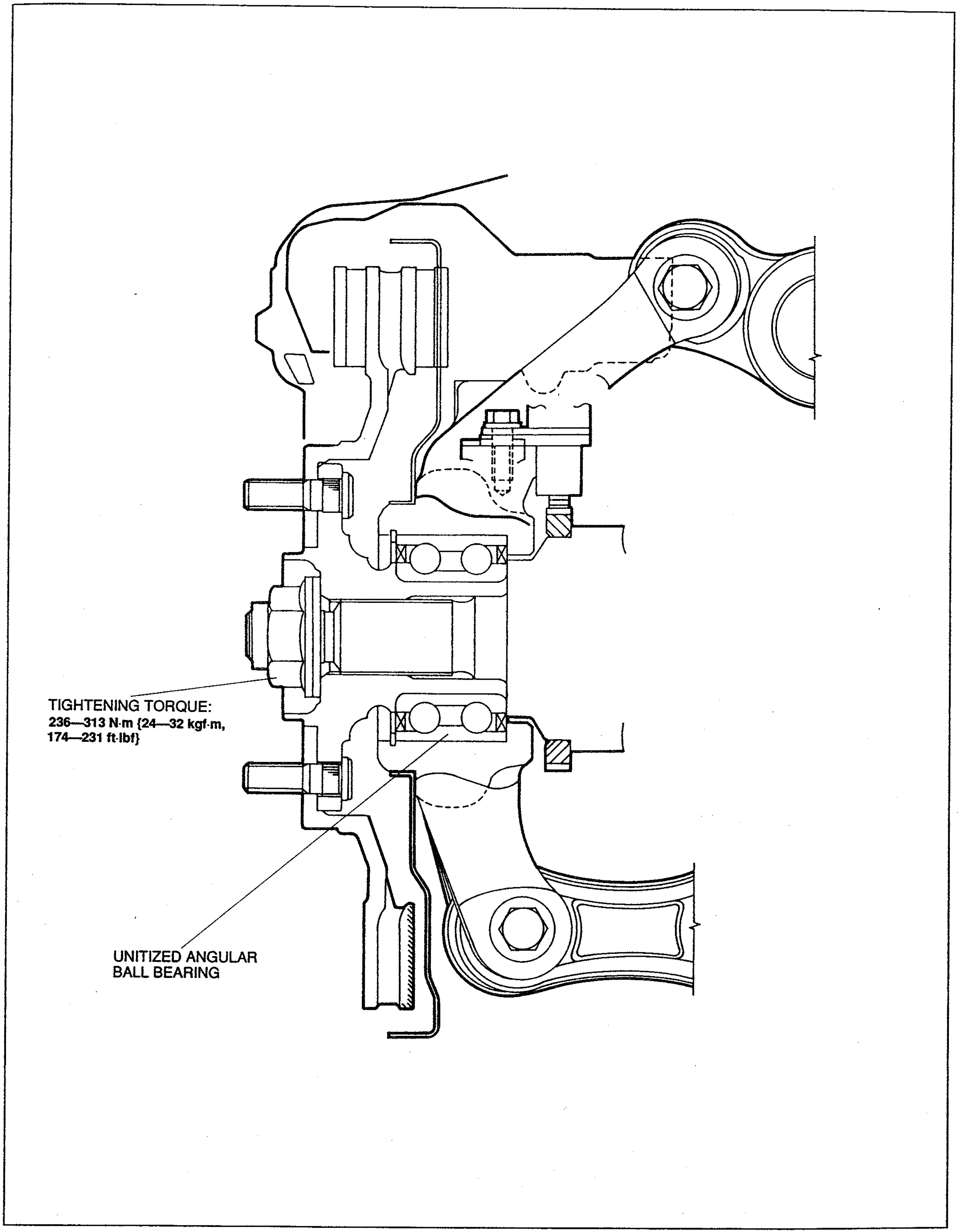

- The unitized angular ball bearing assembly, improves serviceability and durability.

DRIVE SHAFT

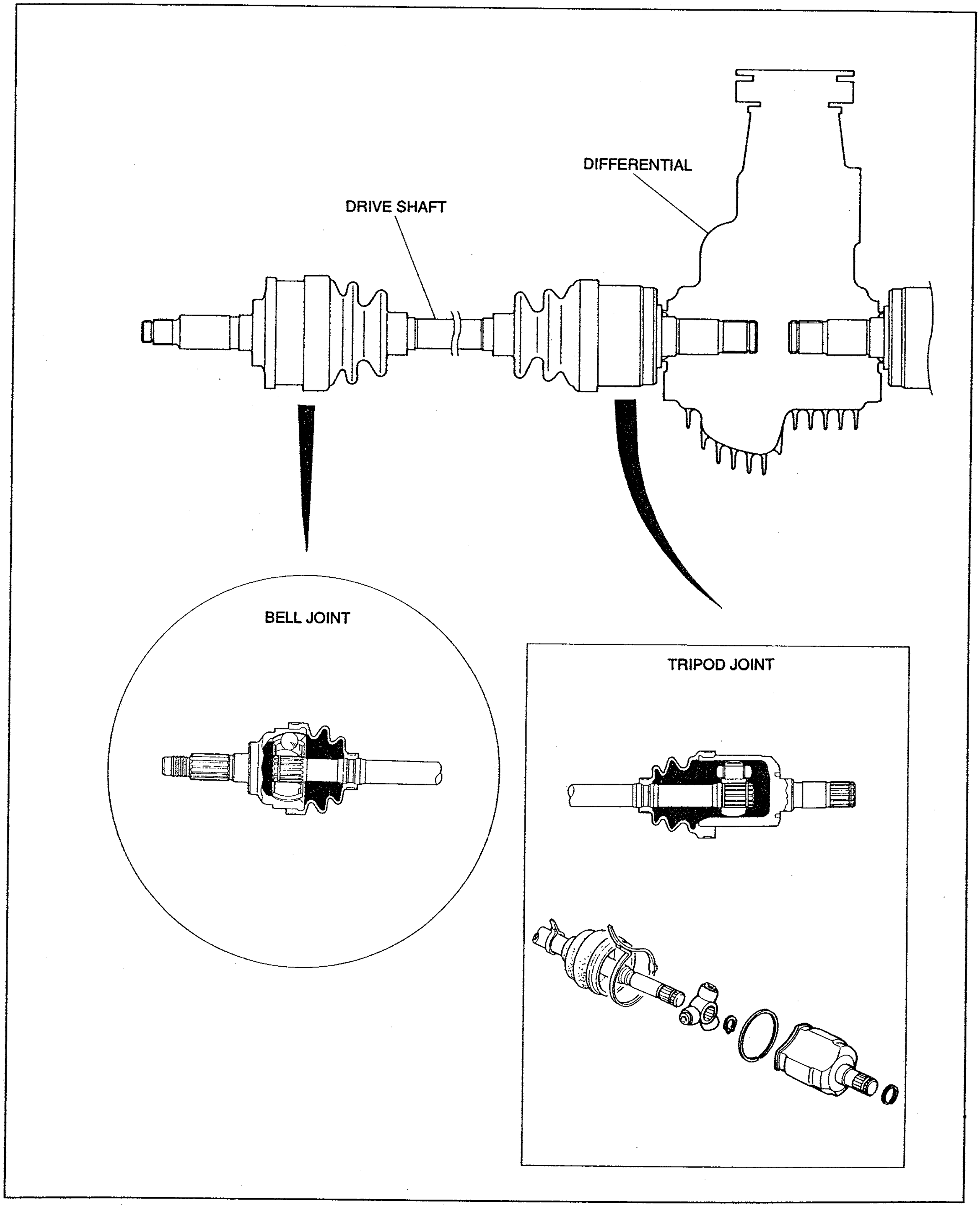

- The drive shaft employs a tripod joint on the differential side and a bell joint on the wheel side to reduce noise and vibration and improve durability.
- The differential side of the drive shaft is splined, and is installed directly into the side gear of the differential to reduce weight (no output shaft is required).

DIFFERENTIAL

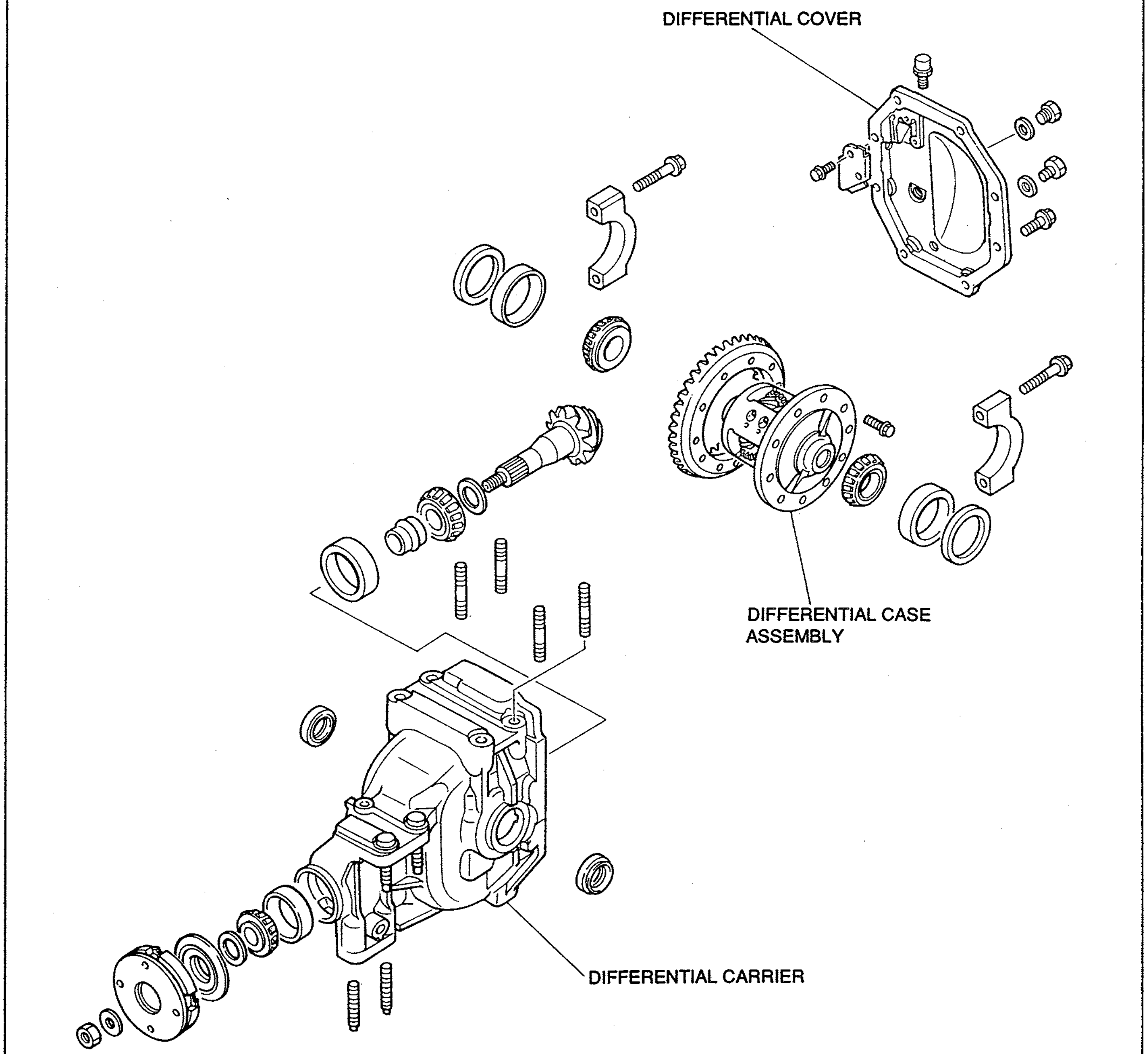

37U0MX-508

- The "TORSEN" LSD torque sensing limited-slip differential is standard equipment for all models to improve drivability and stability. (Refer to page M–8.)
- The power plant frame (PPF) couples the engine/transmission assembly to the differential to unify them as a total drivetrain unit. (Refer to Section J.)
- The intergal carrier differential, with the differential case assembly securely mounted within it, improves the rigidity of the differential and reduces noise and vibration.
- The differential cover is made of aluminum alloy to reduce weight.

TORQUE SENSING LIMITED SLIP DIFFERENTIAL ("TORSEN" LSD)

Outline

- The torque sensing limited-slip differential ("TORSEN" LSD) is a torque-proportioning type LSD with a large bias ratio*. It uses the friction of the worm gear teeth and the thrust washers for the differential-limiting force.
- In comparison with viscus type or friction type LSD, it has following benefits.

1. Large bias ratio torque proportioning
2. Less change of bias ratio over time of vehicle use
3. Standard differential oil is used (special LSD oil not needed)
4. Improved overall traction and improved controllability under acceleration

*Bias ratio

A bias ratio indicates the effectiveness of the LSD function. For an open (non-LSD) differential, when one wheel is spinning, torque to the other wheel is decreased. For LSD, increased torque is transmitted to the wheel not spinning. This torque ratio is called bias ratio.
The bias ratio is calculated as follows:

$$\text{Bias ratio} = \frac{\text{Rotational torque of high resistance shaft}}{\text{Rotational torque of low resistance shaft}}$$

37U0MX-509

Comparison of "TORSEN" LSD and Others

	"TORSEN" LSD	Viscous LSD	Friction-type LSD
Differential-limiting force generation mechanism	• Frictional force of worm gear teeth • Frictional force of thrust washers	Viscous resistance of silicone oil	Frictional resistance of metal and composition plates
Differential-limiting force generation type	Torque-proportioning system	Wheel speed-proportioning system	Torque-proportioning system
Characteristics	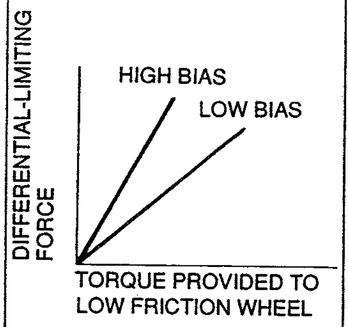	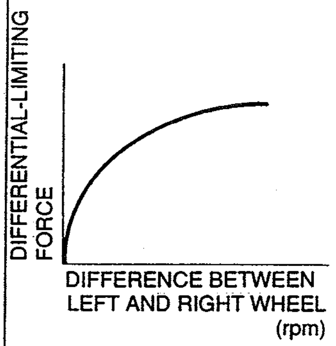	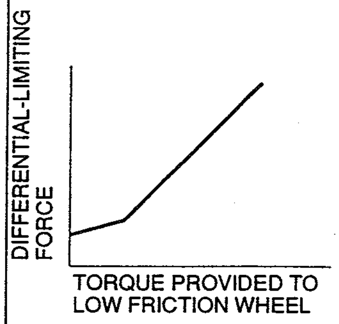
Vibration and noise	Less than friction type LSD	No vibration or noise during LSD operation	Vibration and noise sometime occur during LSD operation
Lubricating oil	Standard differential oil	Standard differential oil (viscous oil in sealed viscous coupling unit)	Special LSD oil
Maintenance	Nonrebuildable, maintenance-free	Nonrebuildable, maintenance-free	Adjustment of friction plates and friction disc is necessary
Features	Refer to above	Viscous mode and hump mode exist	Bias ratio is less than 2

37U0MX-510

Construction

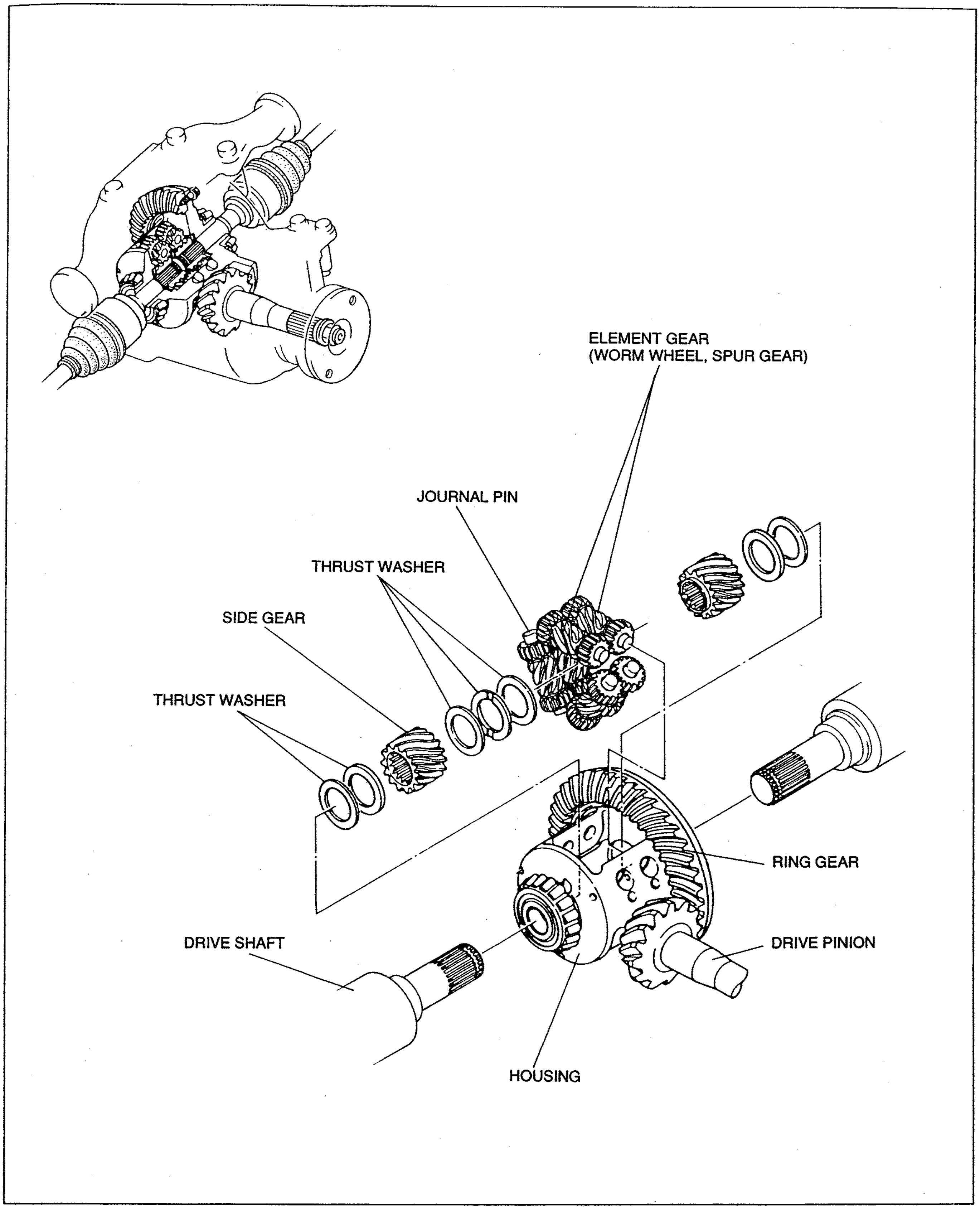

37U0MX-511

- The torque sensing limited-slip differential is composed of the LSD assembly and differential mechanism. The LSD assembly consists of two side gears, six element gears (each consisting of two spur gears, a worm gear and a journal pin) and seven thrust washers. The journal pins are fixed in the housing.

Operation

STRAIGHT AHEAD DRIVING

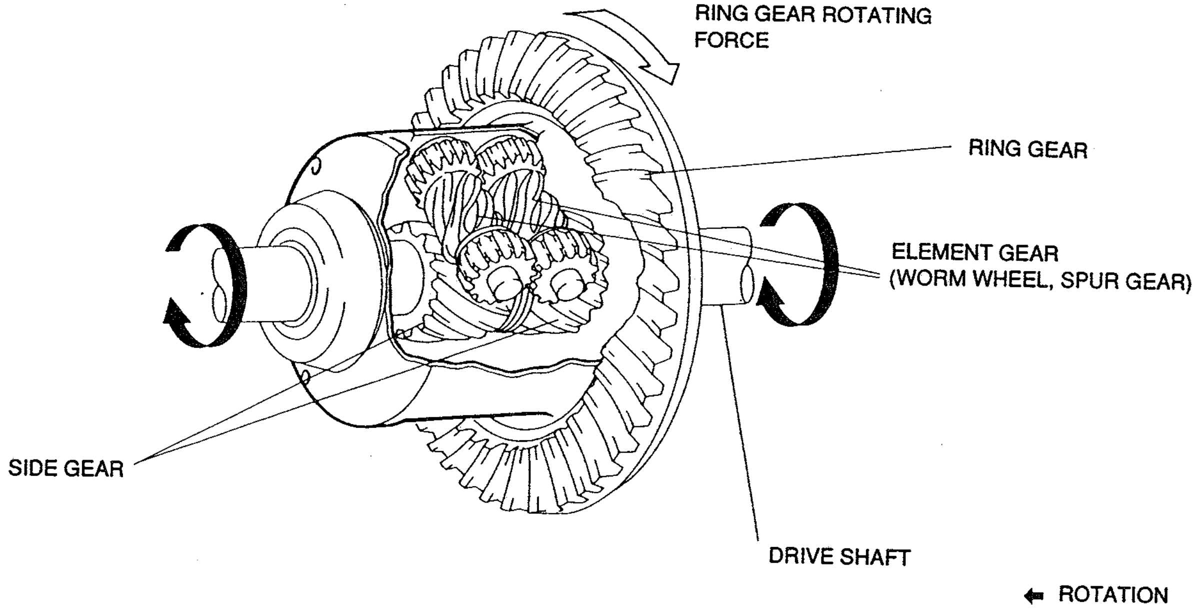

DIFFERENTIAL OPERATION

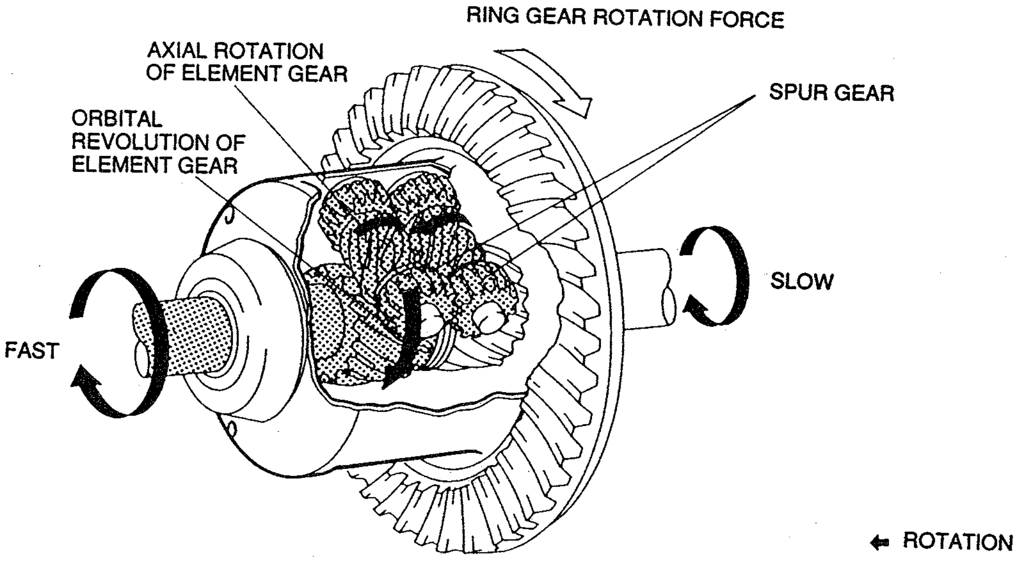

37U0MX-512

Straight ahead driving

When driving straight, the right and left side gears rotate at the same speed and the differential assembly rotates as a unit. Input force from the ring gear is transmitted to the drive shafts through the element gears and the side gears. During this operation, the element gears turn with the side gears.

Differential operation

When rotation speed between the right and left wheel becomes different, the element gears revolve in the opposite direction of each other to absorb the difference.
The function of the spur gears is similar to that of a pinion gear in a conventional differential.

LIMITED-SLIP OPERATION

ROTATION OF ELEMENT GEARS

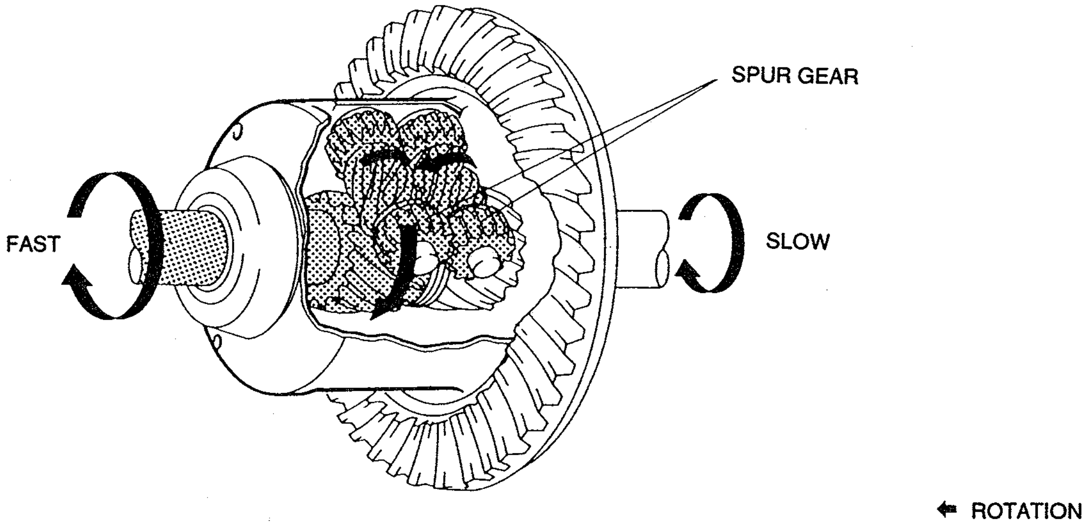

TORQUE FLOW

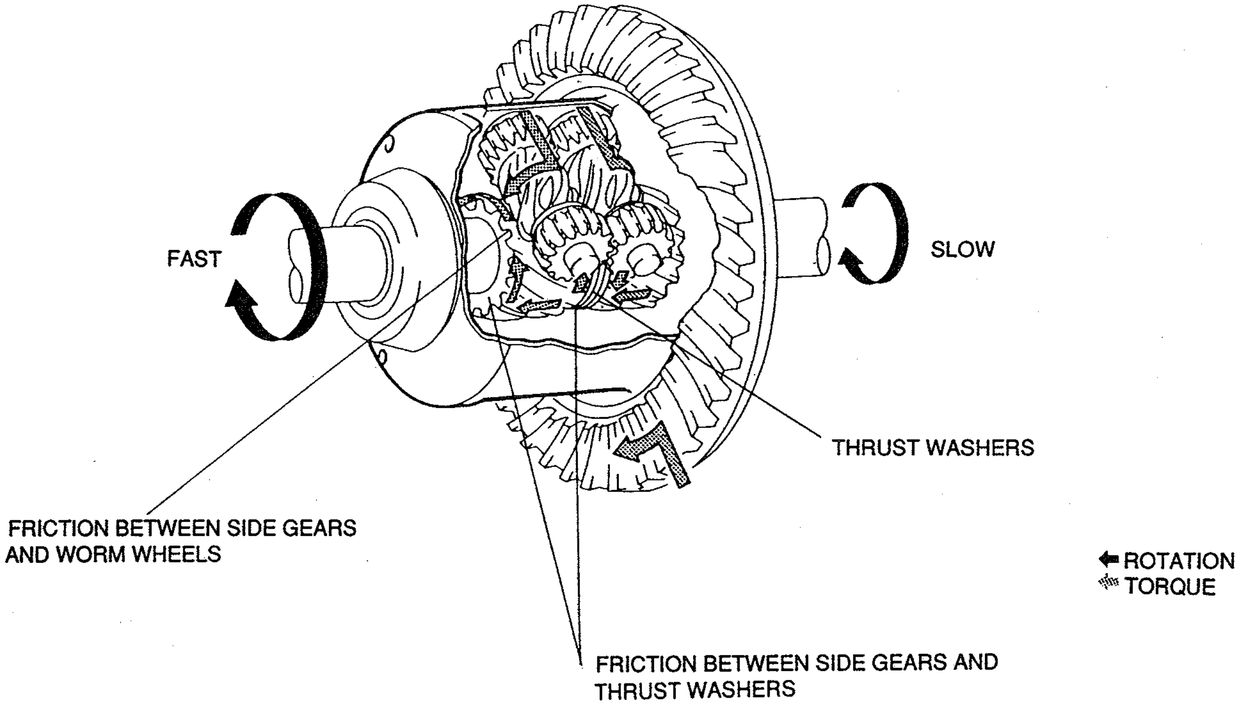

37U0MX-513

Limited-slip operation

When the differential encounters a condition such as a wheel spinning, thrust force is generated by the worm gears and the rotational torque of the spinning wheel is reduced by the friction between the side gears and the worm wheels and friction between the side gears and thrust washers. The torque is then transmitted to the higher traction side. The torque transmitted to high traction side is proportionate to the input torque of the ring gear.

Vehicle Characteristics

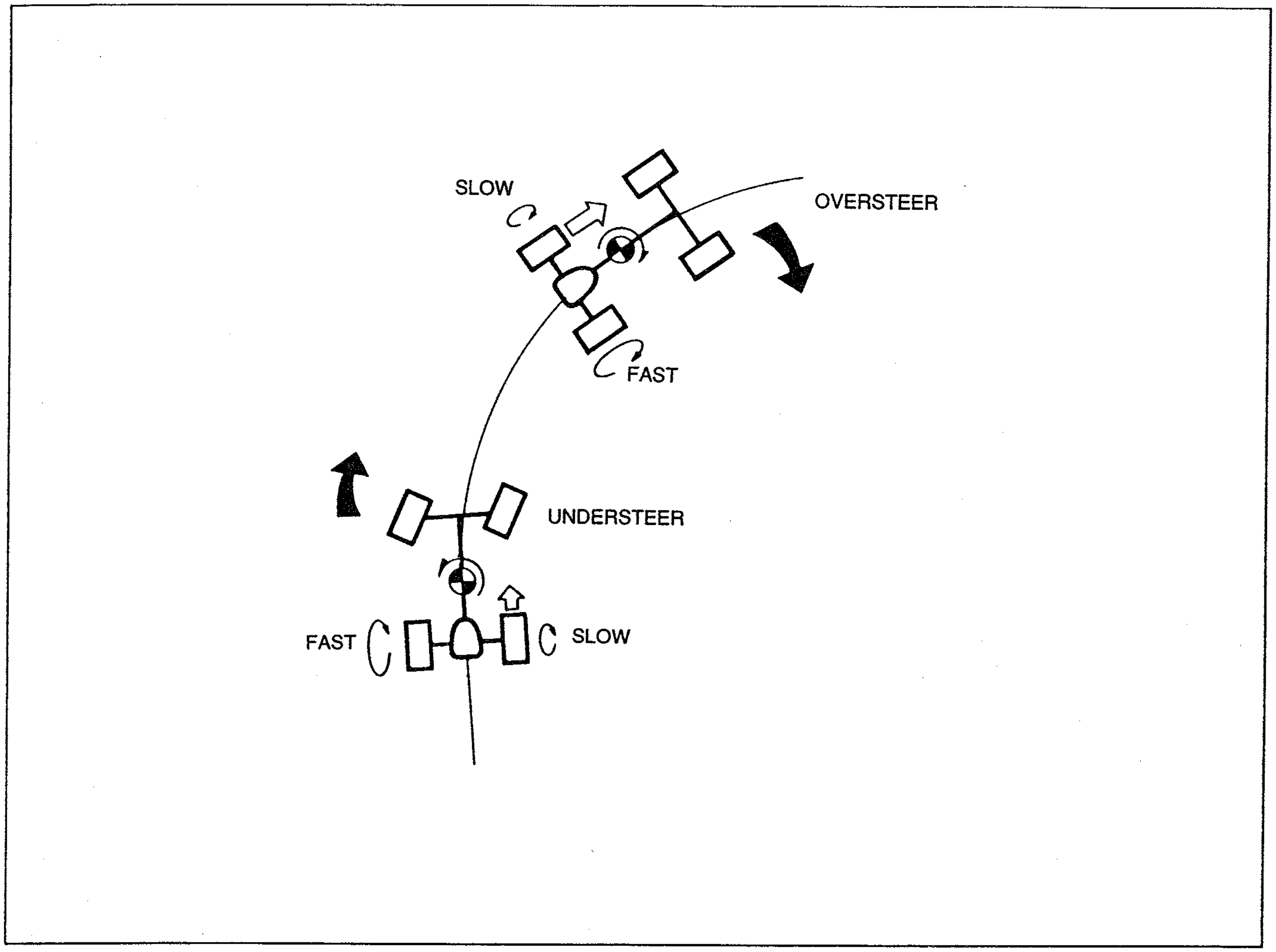

The vehicle's cornering is improved because of the steering characteristic of the "TORSEN" LSD.

Light understeer at beginning of turn
At the beginning of a turn, greater torque is applied to inner wheel because it rotates slower than outer wheel. This torque gently forces the vehicle outward (understeer).

Understeer during turning
If the accelerator is further depressed during the turn, torque applied to the inner wheel becomes greater and understeering becomes more pronounced.

Oversteer at limit
At the limit of traction during the turn, the inner wheel starts spinning because its road friction is greatly reduced. While spinning of the inner wheel is reduced by the "TORSEN" LSD, at the same time extra torque is applied to the outer wheel.
Thus the vehicle is gently forced inward (oversteer).

STEERING SYSTEM

37U0NX-501

OUTLINE

OUTLINE OF CONSTRUCTION

1. Engine speed sensing power steering (ESPS) is standard equipment for all models. The construction and operation are similar to previous model's.
2. The oil pump pulley is made of resin to reduce weight.

37U0NX-502

STRUCTURAL VIEW

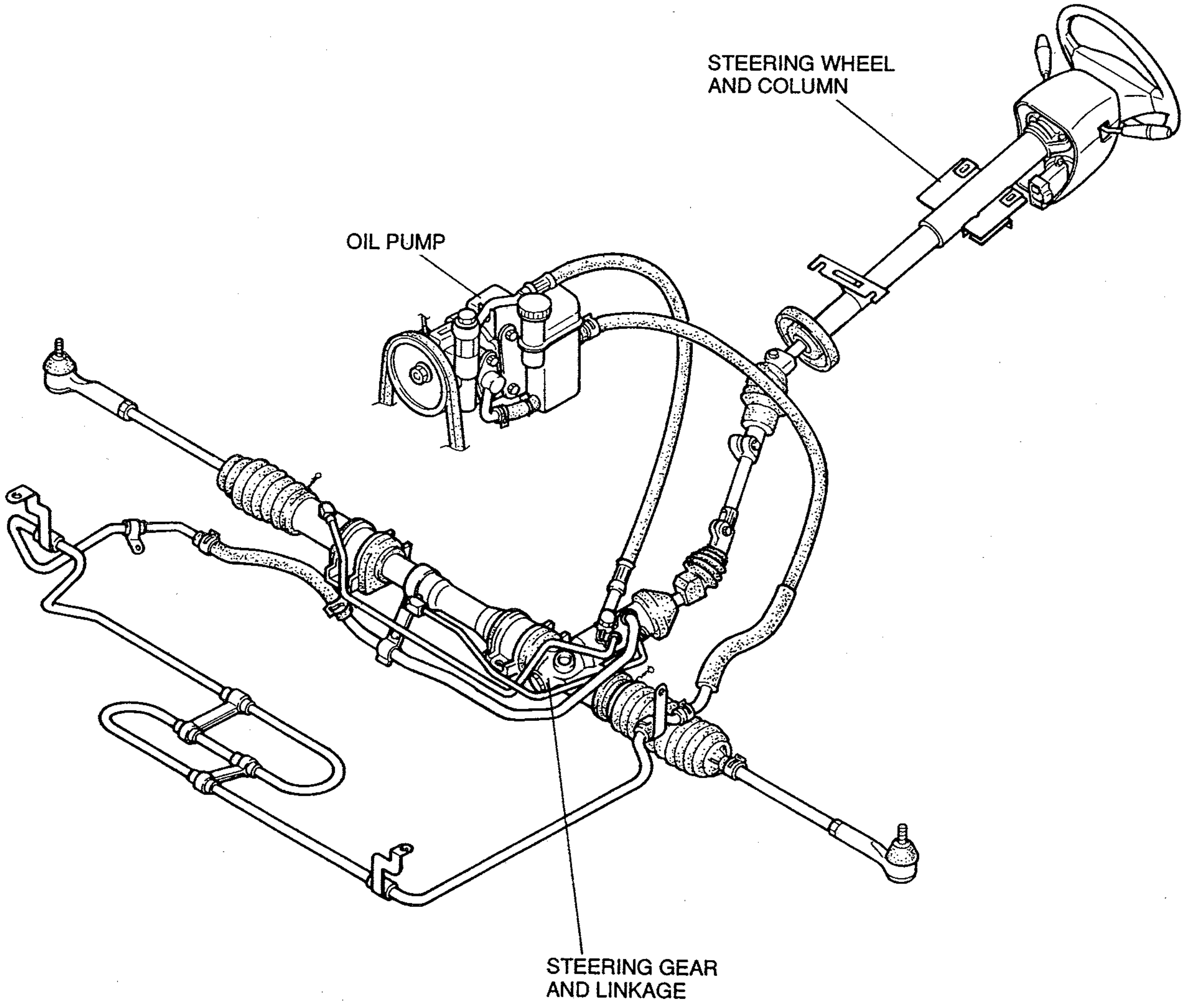

37U0NX-503

SPECIFICATIONS

Item		Specifications
Steering wheel	Outer diameter mm {in}	380 {15.0}
	Lock-to-lock turns	2.9
Steering gear	Type	Rack-and-pinion
	Gear ratio	∞ (infinite)
	Rack stroke mm {in}	160 {6.30}
Steering column and Shaft	Shaft type	Collapsible, non-tilt
Power assist system		Engine speed sensing
Power steering fluid	Type	Dexron® II or M-III
	Fluid capacity L {US qt, Imp qt}	0.96 {0.25, 0.21}

37U0NX-504

BRAKING SYSTEM

37U0PX-501

OUTLINE

OUTLINE OF CONSTRUCTION

- Large-diameter ventilated front and rear disc brakes are used.
- Every other cooling fin of the disc plate is split, adding increased disc surface area and reducing weight.
- Conventional fixed-type aluminum alloy calipers with four opposed pistons have been adopted for improved brake performance.
- Floating-type calipers function both in the rear brakes and parking brake have been adopted.
- The parking brake has an automatic adjuster function.
- A center-lever-type parking brake lever is used. Optimized lever position improves operability.
- The brake pedal is composed of high-rigidity aluminum alloy, reducing vehicle weight.
- The vacuum servo type power brake unit is used for high reliability. Also, diaphragms tandem type (8 + 8 inches) ensure sufficient brake power with less pedal pressure.
- A portless master cylinder is used for its high compatibility with the four-wheel anti-lock brake system (4ABS).
- A flush-mounted master cylinder is used, reducing the overall length of the assembly with the power brake unit.
- A proportioning bypass valve has been added to prevent premature locking of the rear wheels, resulting in improved safety.
- A four-wheel anti-lock brake system (4ABS) is now standard equipment in all vehicles, resulting in improved safety.

R1 vehicle

- The front facia have independent brake cooling ports and air ducts, and the dust covers have air intake boards, all of which increase brake cooling efficiency. Further, to prevent hot air that has passed through the oil cooler from being sent to the brakes, an air bypass system has been designed in which hot air is bypassed through a duct in the fender, where it escapes through a rear air outlet.

37U0PX-502

FEATURES

Improved braking	Adoption of caliper with four opposed pistons (front)	P– 4
	Use of tandem power brake unit	P–10
Improved cooling	Addition of disc plates with split cooling fins	P– 5, 8
	Use of air bypass system (R1 vehicle)	P– 6
Improved safety	Installation of proportioning bypass valve	P–11
	Adoption of four-wheel anti-lock brake system (4ABS)	P–12

37U0PX-503

SPECIFICATIONS

Item			Specifications
Brake pedal			
Type			Suspended
Lever ratio			4.1
Maximum stroke	mm {in}		135 {5.31}
Master cylinder			
Type			Tandem (with level sensor) Portless & recessed type
Bore	mm {in}		23.8 {0.94}
Front brake			
Type			Disc (ventilated)
Cylinder bore	mm {in}		36.1 {1.42}
Pad dimension (area × thickness)	mm² × mm {in² × in}	Outer	4,500 × 10.3 {6.97 × 0.41}
		Inner	4,500 × 9.3 {6.97 × 0.37}
Disc plate dimension (outer diameter × thickness)	mm × mm {in × in}		294.0 × 22.0 {11.570 × 0.87}
Rear brake			
Type			Disc (ventilated)
Cylinder bore	mm {in}		34.9 {1.37}
Pad dimension (area × thickness)	mm² × mm {in² × in}		3210 × 8.0 {4.98 × 0.31}
Disc plate dimension (outer diameter × thickness)	mm × mm {in × in}		294.0 × 20.0 {11.57 × 0.79}
Power brake unit			
Type			Vacuum multiplier
Size	mm {in}		209.5 + 215.2 {8 + 8}
Rear wheel hydraulic control system			
Type			Proportioning bypass valve
Switching point (Master cylinder pressure)	kPa {kgf/cm², psi}		3,920 {40.0, 570}
Parking brake			
Type			Mechanical two-rear-wheel control
Operation system			Hand lever
Brake fluid			
Type			FMVSS 116 DOT-3

37U0PX-504

FRONT BRAKE

CALIPER

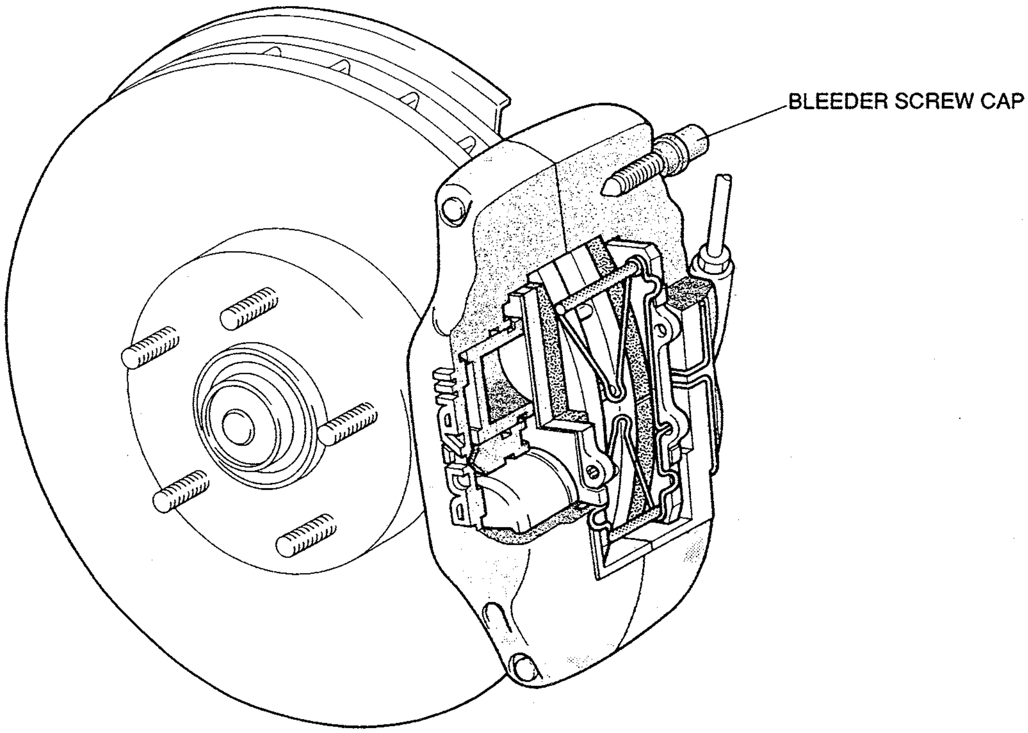

DISC BRAKE CALIPER WITH FOUR OPPOSED PISTONS

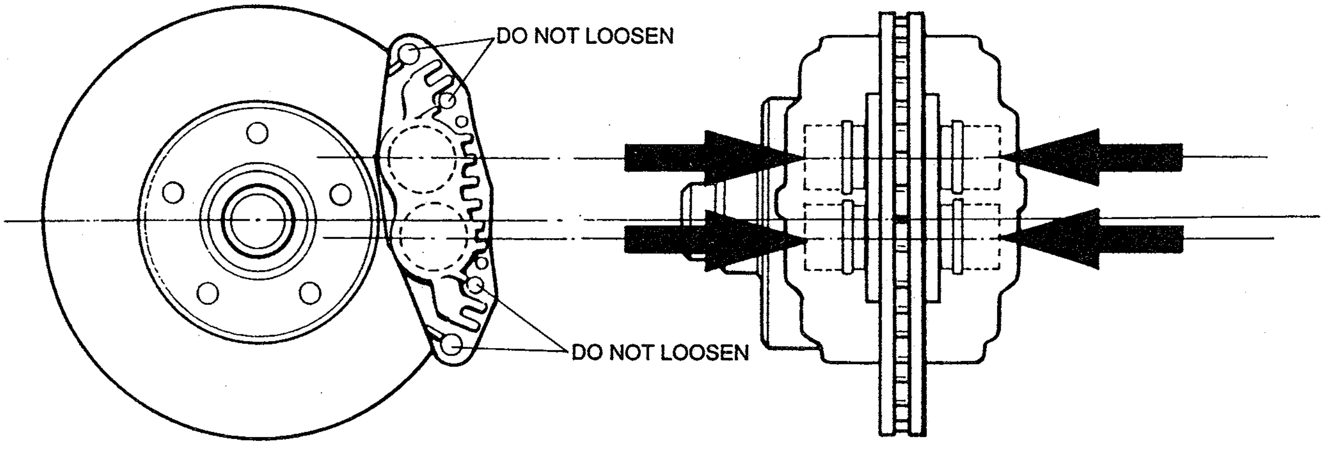

37U0PX-505

- Fixed-type aluminum alloy calipers with four opposed pistons have been adopted. These calipers increase the effective braking radius and ensure uniform pad pressure, improving brake performance.
- A bleeder screw cap that covers the entire bleeder screw is used.
  This is to prevent electrolytic corrosion that could occur with the presence of moisture at the contact surfaces between the aluminum alloy calipers and the iron bleeder screws. Make sure that the bleeder screw cap securely covers the bleeder screw.

Note

- **Because the caliper can not be disassembled, do not loosen the four bolts.**

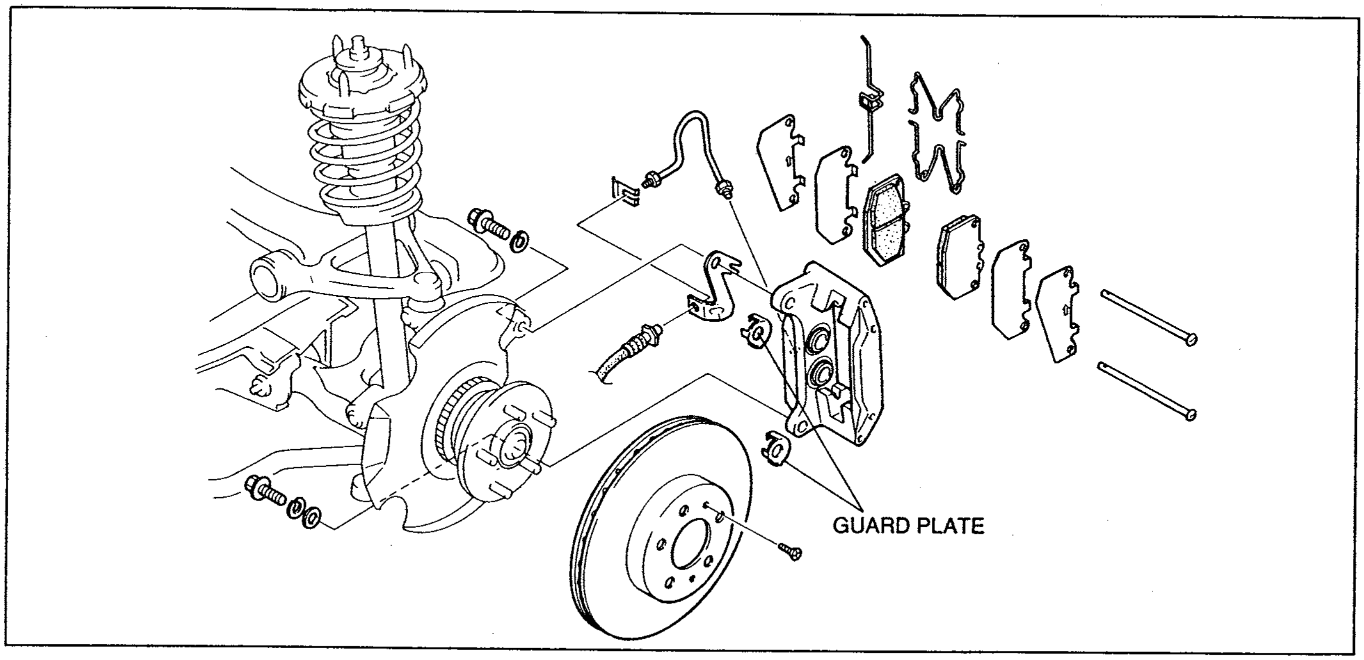

37U0PX-506

- To prevent electrolytic corrosion, a guard plate is inserted between the caliper and knuckle, and a zinc-chromate coating washer is used.
- A wear indicator has been added that sounds an alarm when the life of a pad is near expiration. A warning sounds when 2mm {0.079 inch} of padding remains.

Note

- **Assemble the noise-dampening shim (outer side is made of stainless steel) so that the (←) direction corresponds to the rotating direction of the disc plate.**

DISC PLATE

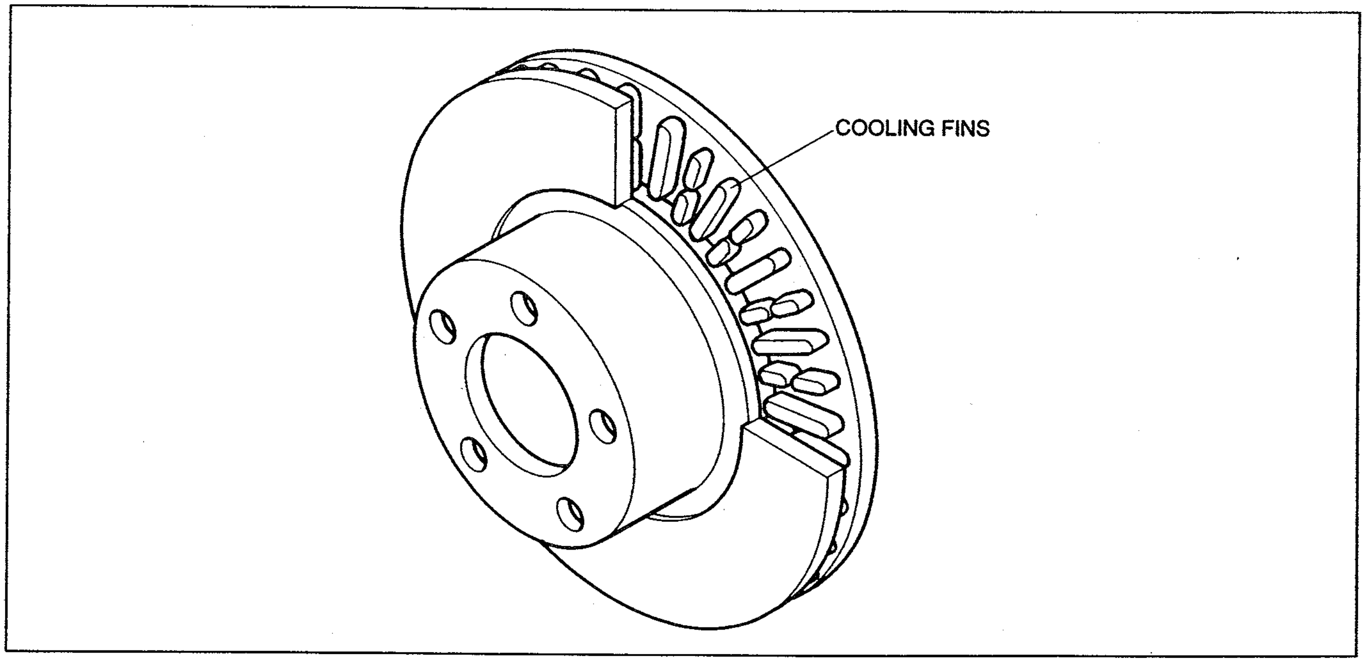

37U0PX-507

- The disc plate is fastened to the wheel with a wheel nut, and is attached on the outside of the wheel hub. This makes removal easy, improving serviceability.
- To prevent rust from forming on the surface during early usage, zinc-chromate coating have been applied.
- Every other cooling fin of the disc plate is split, adding increased disc surface area and reducing weight.

AIR BYPASS SYSTEM ······· R1 vehicle

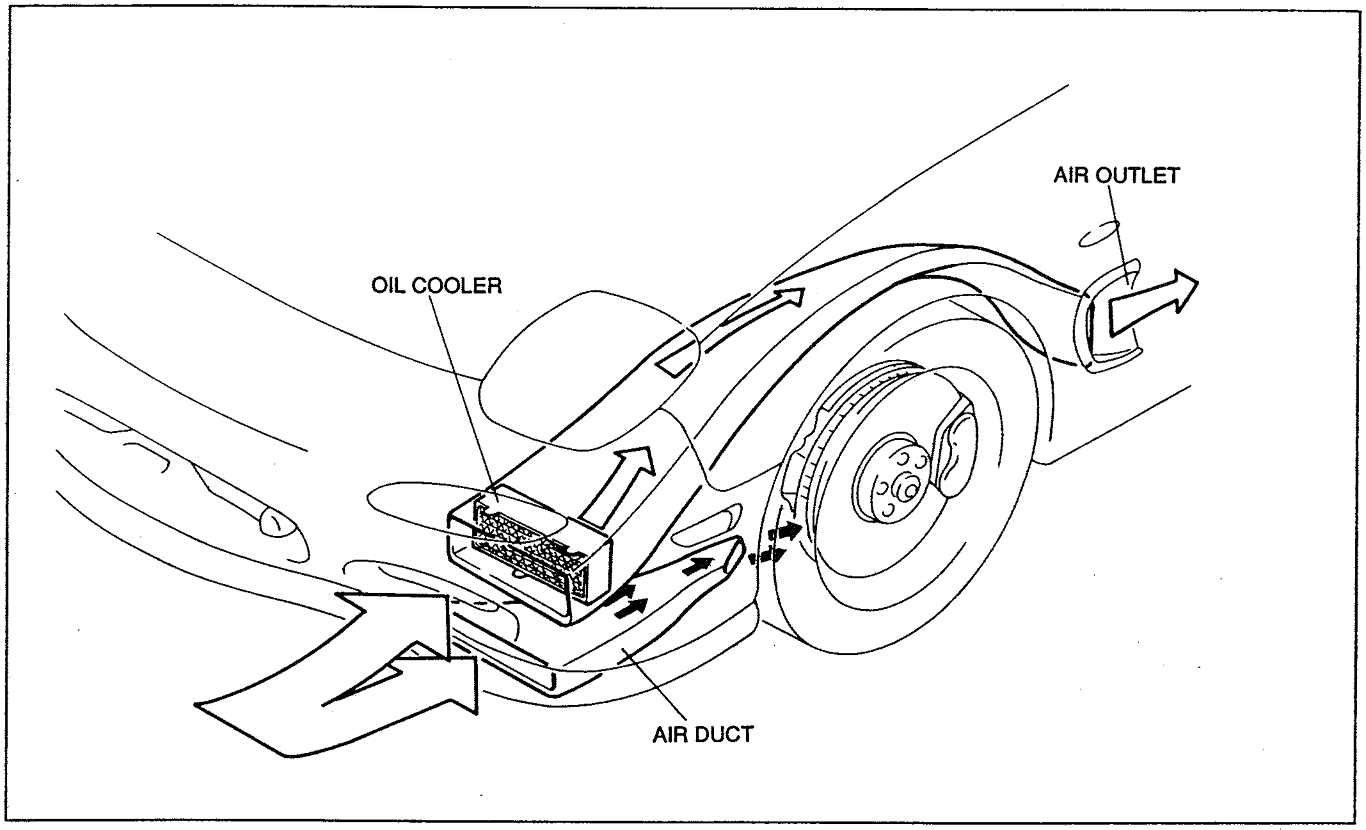

37U0PX-508

- The front facia have an independent brake cooling ports and air ducts, and the dust covers have air intake board, all of which increase brake cooling efficiency. Further, to prevent hot air that has passed through the oil cooler from being sent to the brakes, an air bypass system has been designed in which hot air is bypassed through a duct in the fender, where it escapes through a rear air outlet.

REAR BRAKE

CALIPER

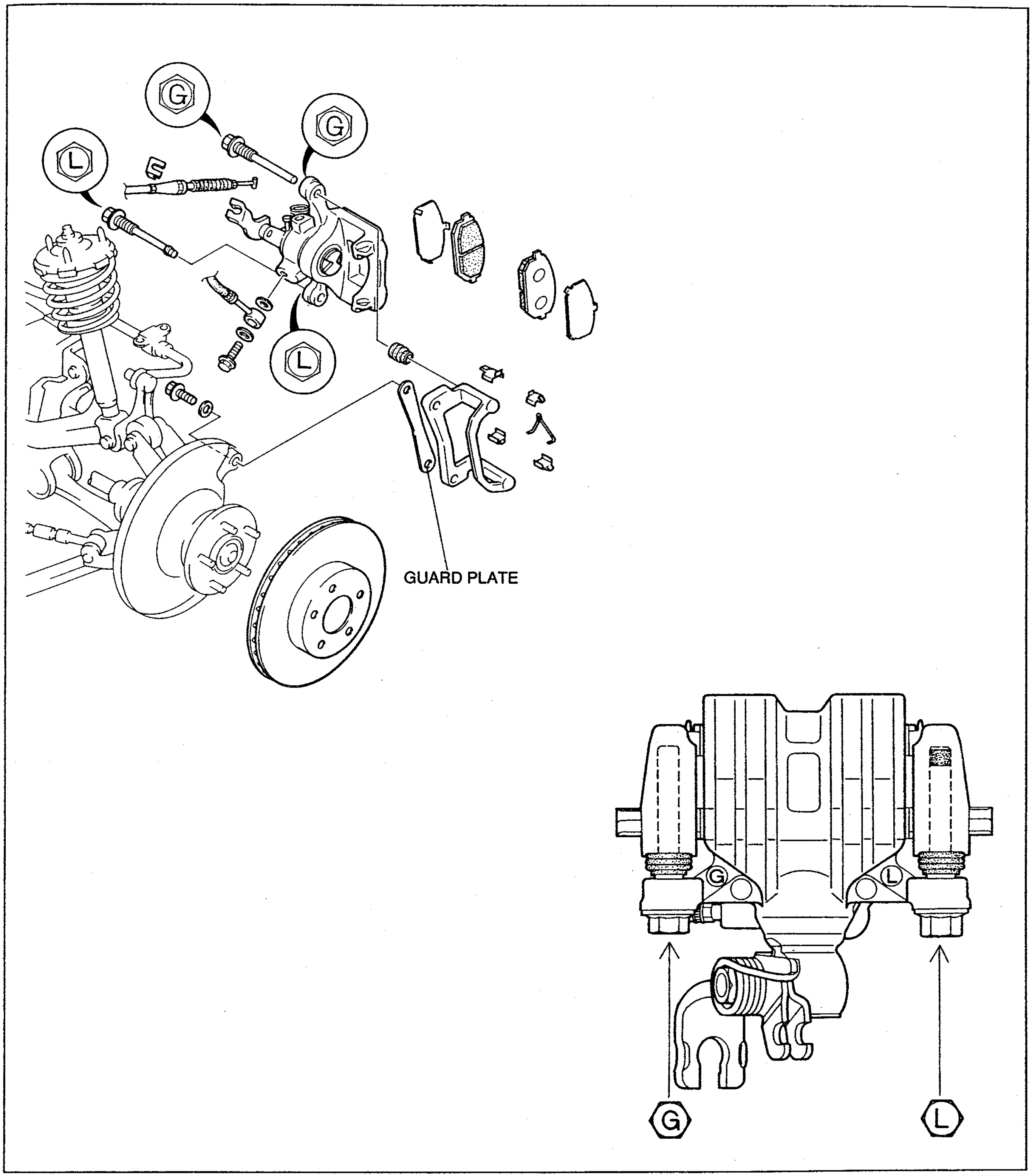

37U0PX-509

- A floating-type caliper has been adopted.
- The parking brake is equipped with an automatic adjuster.
- To prevent electrolytic corrosion, a guard plate is inserted between the mounting support and rear hub support, and a zinc-chromate coating washer is used.
- Before installation, confirm that the character written on the head of the caliper mounting bolt matches that of the caliper body.

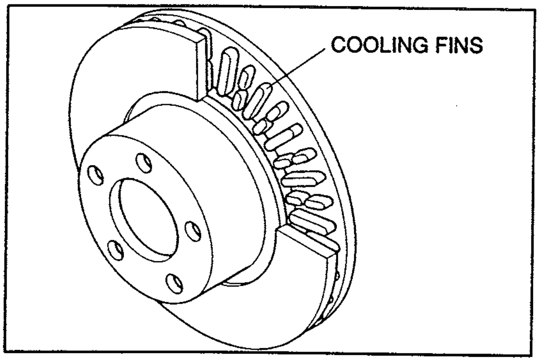

37U0PX-510

DISC PLATE

- The same zinc-chromate coating as those applied to the front brakes have been applied to prevent rust from forming on the surface during early usage.
- Every other cooling fin of the disc plate is split as in the front brakes, adding increased disc surface area and reducing weight.

PARKING BRAKE AUTOMATIC ADJUSTER

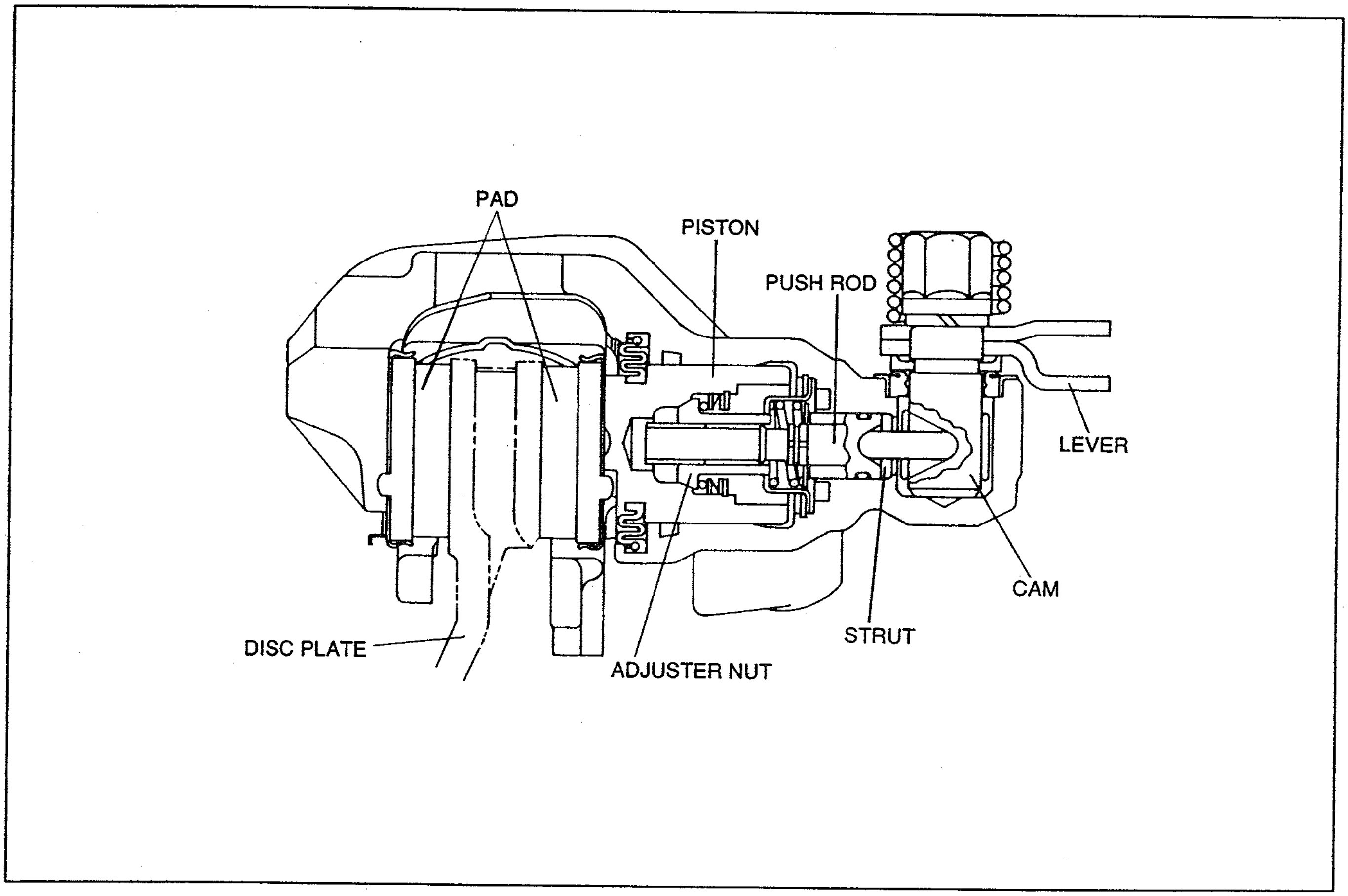

37U0PX-511

- When the parking brake lever is pulled, the lever turns through the parking brake cable. The strut is pushed by the cam connected to this lever. The force applied to the strut is transmitted to the push rod, adjuster nut and piston, in that order.
  The piston then forces the pad against the disc plate, braking the rear wheels.

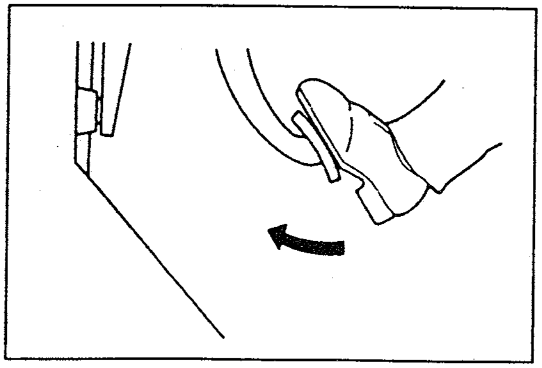

37U0PX-516

Caution

- **When replacing the pad or disassembling the caliper, depress the foot brake 2-3 times before adjusting the stroke of the parking brake lever.**

POWER BRAKE UNIT

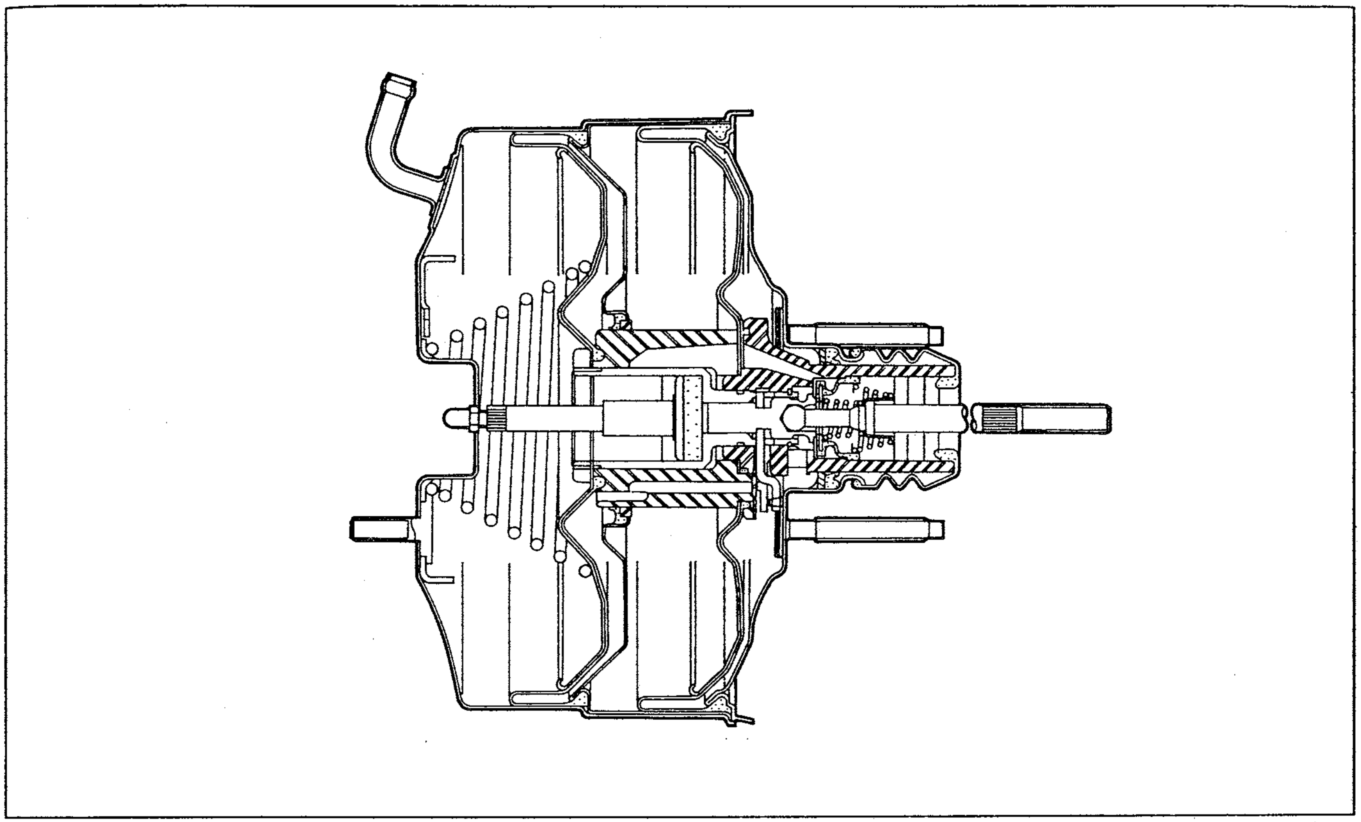

37U0PX-517

- A flush-mounted, tandem type (8+8 inches) power brake unit is used.

MASTER CYLINDER

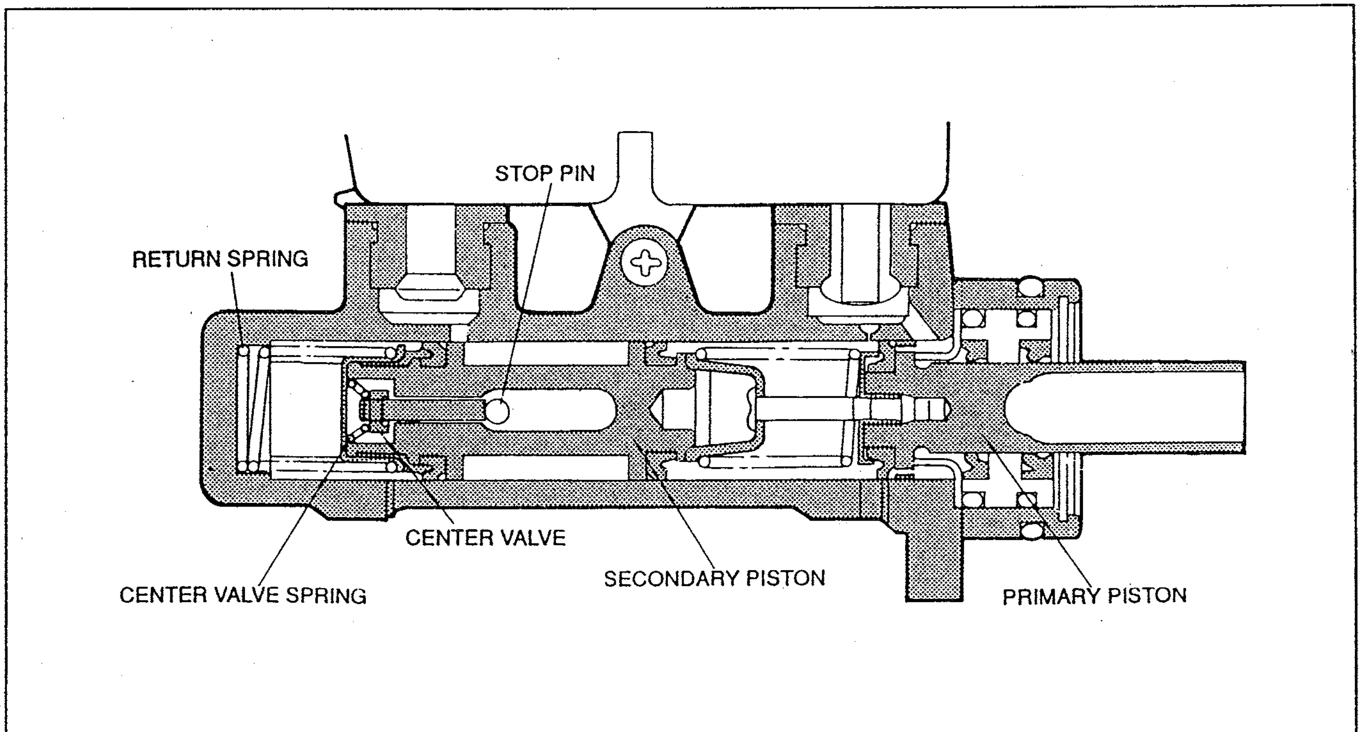

37U0PX-518

- A portless, tandem master cylinder (inside diameter (23.8mm/0.94 in)) is employed.
(For operation, refer to page P–18.)

PROPORTIONING BYPASS VALVE

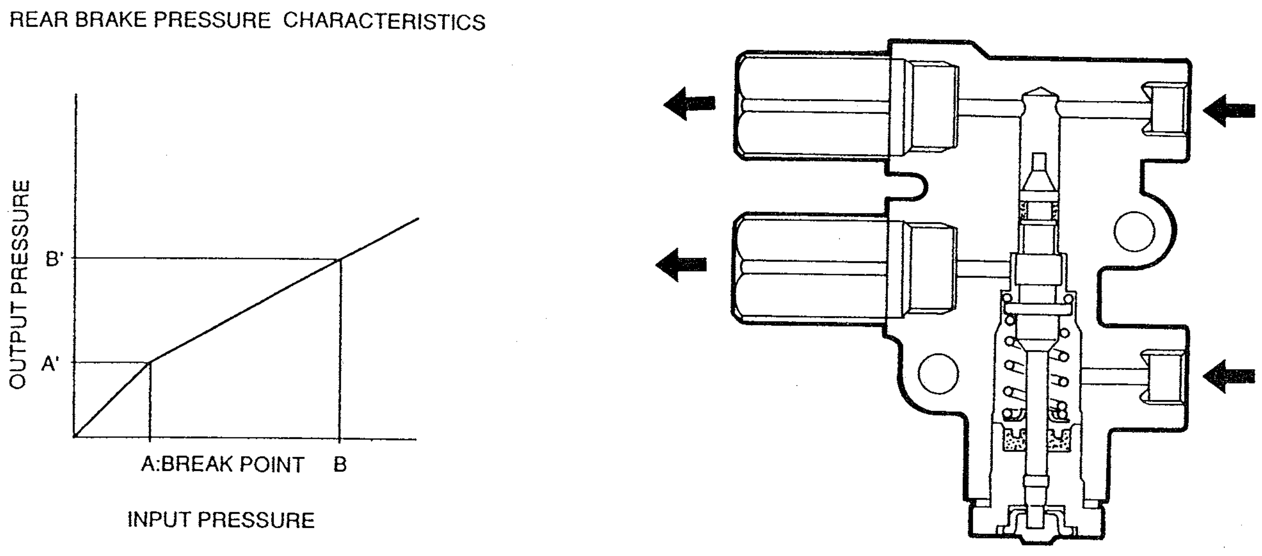

BRAKE PRESSURE	kPa {kgf/cm², psi}	OUTPUT PRESSURE
INPUT PRESSURE	A=3,920 {40, 570}	A'=3,630–4,210 {37—43, 530—610}
	B=5,880 {60, 850}	B'=4,320–5,090 {44—52, 626—739}

37U0PX-519

- A proportioning bypass valve is used to control the rear wheel hydraulic pressure.

BRAKE PEDAL

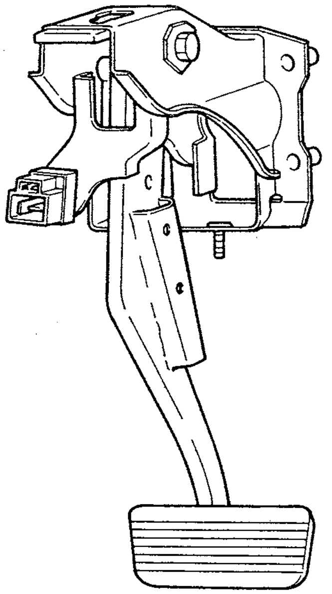

37U0PX-520

- The brake pedal is made of aluminum alloy.

ANTI-LOCK BRAKE SYSTEM (ABS)

OUTLINE

The ABS is an electronically controlled brake system which controls brake application to maintain directional stability and steerability of the vehicle during braking.
The ABS does this by determining the amount of wheel slippage during sudden braking or during braking on snow-covered or otherwise slippery road surfaces. Signals are then relayed and acted upon through a computerized ABS control unit. The ABS is an independent front wheel control, rear axle control (select low control), four-sensor, 3-channel system. Its basic components are the hydraulic unit, the control unit, and the four wheel speed sensors.

Note

- **Select low control is a method that controls the brake hydraulic pressure of both the right and left rear wheels by comparing wheel speeds and then controlling the hydraulic pressure in relation to the side which is in greater danger of the brake locking.**

05E0PX-004

STRUCTURAL VIEW

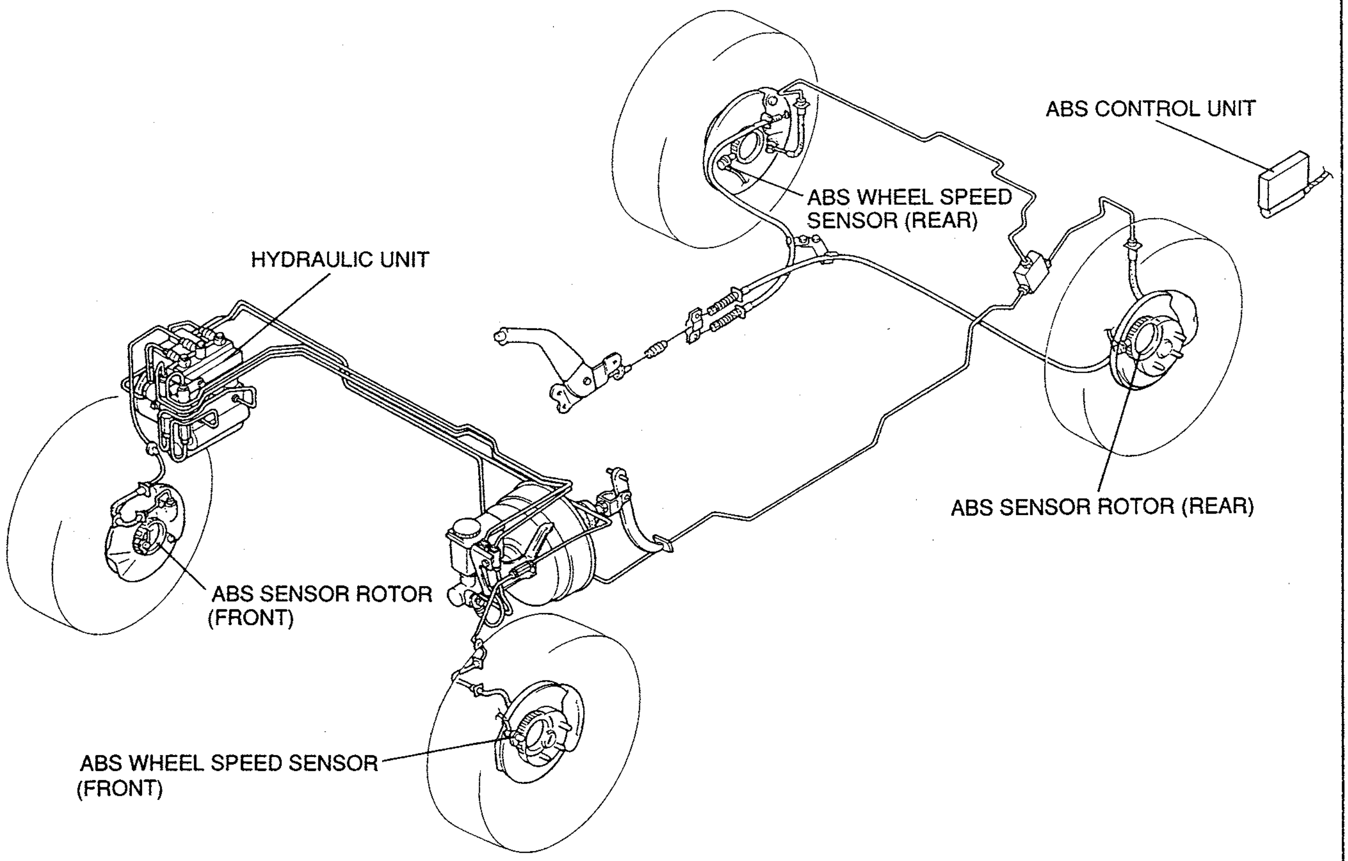

05E0PX-005

SYSTEM DIAGRAM

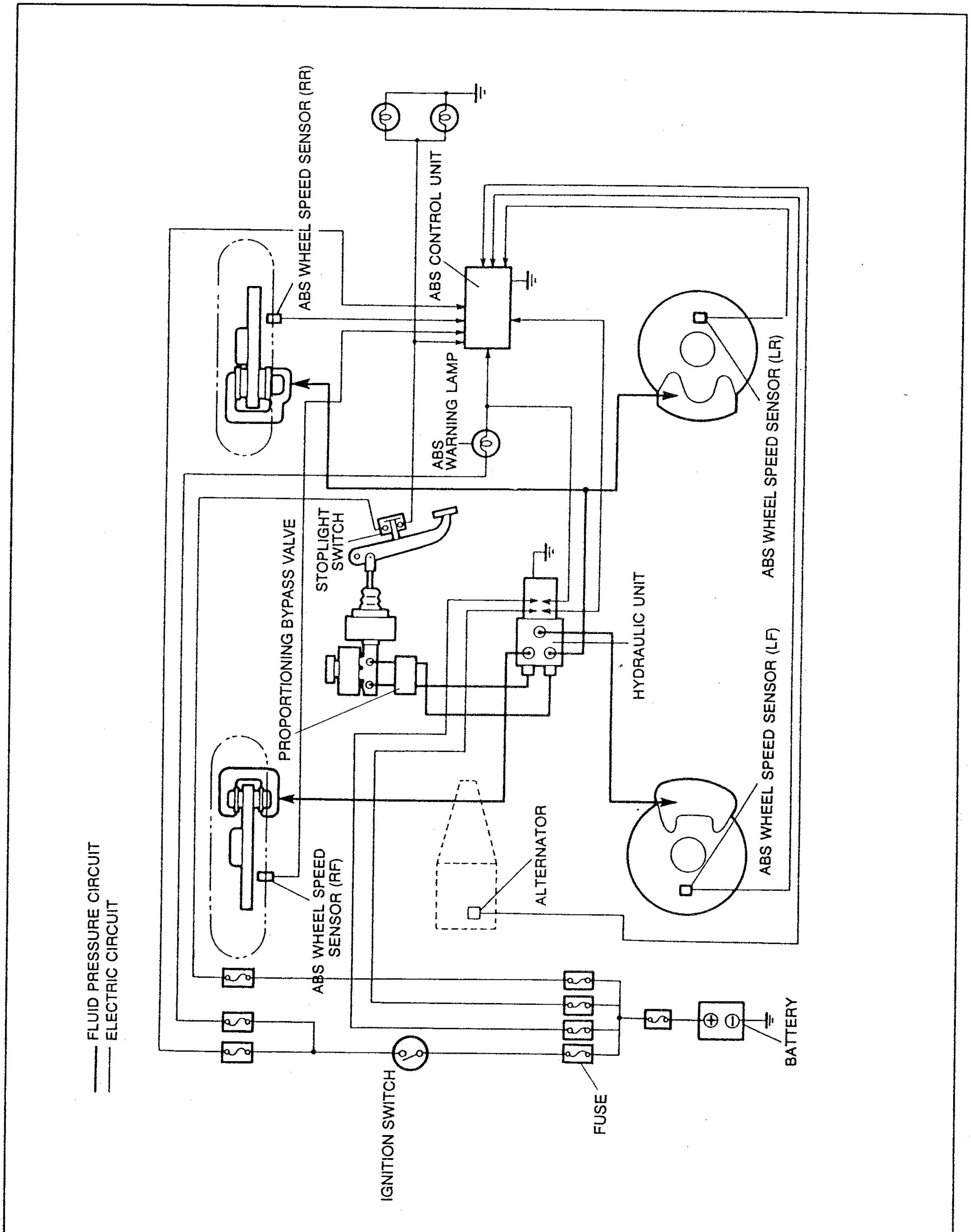

05E0PX-006

MAJOR COMPONENTS AND FUNCTION

Part	Function
Wheel speed sensors	• The speed sensors detect the rotational speed of the wheels and relay this data as electrical signals to the ABS control unit.
ABS control unit	• The ABS control unit receives and computes the signals from the speed sensors, then judges the situation of the wheels and relays signals to the hydraulic unit for control of the hydraulic fluid pressure to prevent wheel lock up during braking. • The basic circuits of the control unit are: 1) Operation circuit 2) Control circuit 3) Fail-safe circuit • In the event of an electrical malfunction of the ABS, the fail-safe function allows the usual braking operations and causes the ABS warning lamp to illuminate.
Hydraulic unit	• The hydraulic unit controls the hydraulic pressure applied to each brake caliper in accordance with signals from the control unit. There are four pressure control operations: 1) Normal 2) Pressure increase 3) Pressure retention 4) Pressure reduction

05E0PX-007

ADVANTAGES OF ANTI-LOCK BRAKE SYSTEM

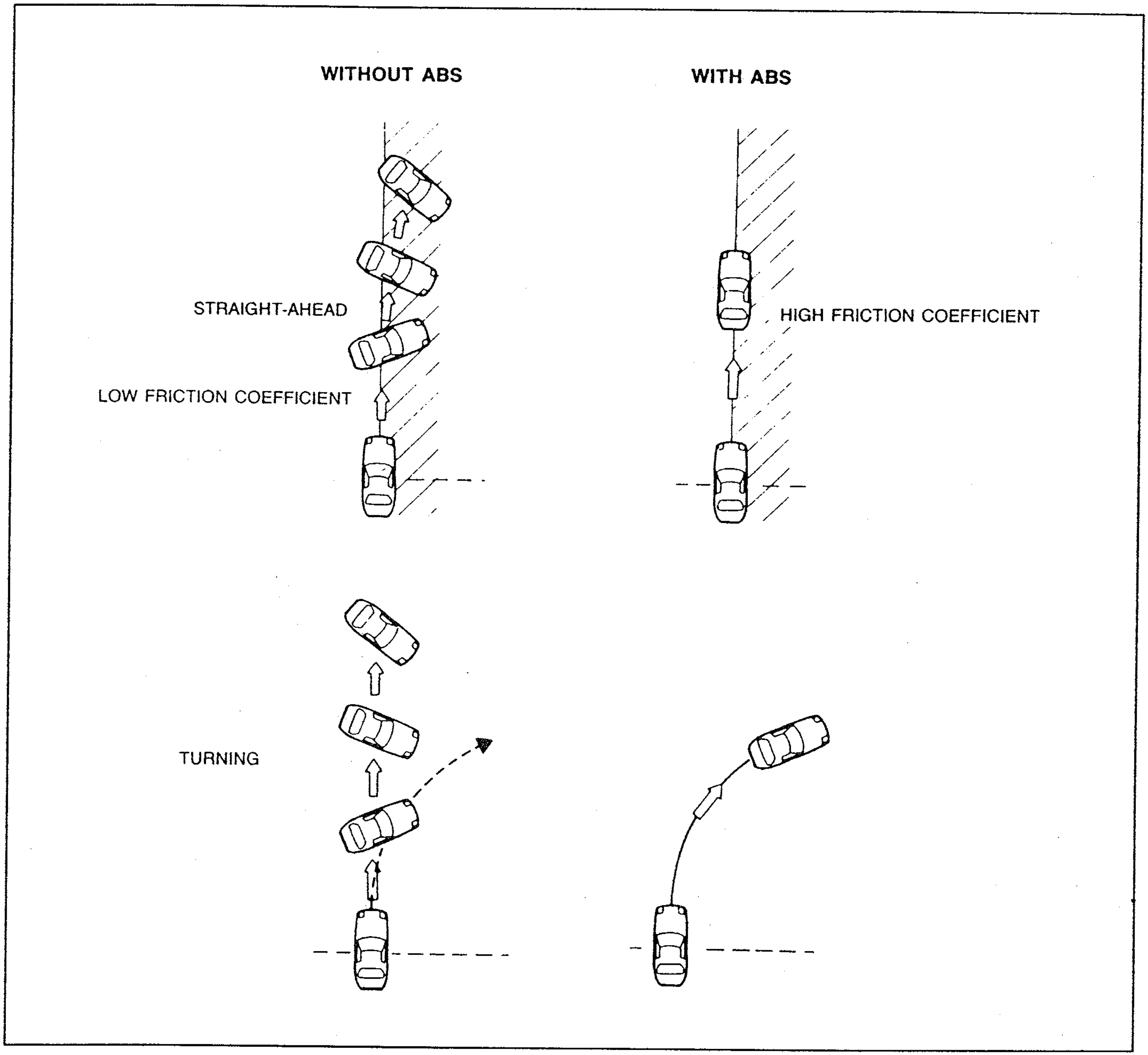

05E0PX-008

During straight-ahead travel with slippery road surface (low friction coefficient) on one side

Without ABS

When the brakes are applied during straight-ahead travel, the wheels on the slippery surface lock, and the front of the vehicle veers toward the side of the road with the highest friction coefficient, thus causing a spin.

With ABS

Because the braking force is controlled in such a way that the wheels will not lock when the brakes are applied, the vehicle does not spin during braking and, as an added benefit, the braking distance is usually shortened.

During a turn on a slippery road surface (low friction coefficient)

Without ABS

When the brakes are applied suddenly, the wheels lock and the vehicle veers in the direction of the turn, thus resulting in a spin.

With ABS

Because the braking force is controlled in such a way that the wheels do not lock, the steering performance is maintained and the vehicle can be driven around the turn.

PRINCIPLES OF ANTI-LOCK BRAKE SYSTEM

The ABS controls braking force by controlling the brake system hydraulic pressure so that the wheels do not lock during braking. The braking force is controlled based on the slippage ratio determined from the friction coefficient (road surface condition), the wheel speed, and the vehicle speed so that the most effective braking is provided at all times.

Friction coefficient (road surface condition)

When comparing an asphalt road to a snow-covered road surface, the frictional force between the tires and the road is much lower for a snow-covered road than for an asphalt road. The tires, therefore, slip much easier on the snow-covered road surface.

This frictional force condition is expressed as the friction coefficient.

Wheel speed

When the brakes are applied, the wheel rotational speed is reduced as a result of the friction between the tires and the road surface. This actual rotation speed of the wheel is expressed as the wheel speed.

Vehicle speed

When the brakes are applied, the speed of the vehicle is reduced as the wheel speed is reduced.

Despite this reduction of wheel speed, however, the vehicle tries to continue moving in the same direction due to its inertial force. This actual vehicle movement is expressed as the vehicle speed.

The control unit therefore uses the wheel speed, not the vehicle speed, as the basic of calculations to control braking.

Slippage ratio

When the brakes are applied, the difference that occurs between the wheel speed and the vehicle speed is called slippage.

This is expressed as the slippage ratio, and is defined by the following formula.

$$\text{Slippage ratio} = \frac{\text{vehicle speed} - \text{wheel speed}}{\text{vehicle speed}} \times 100\ (\%)$$

Example:

A vehicle is running on ice at a speed of 10 km/h (6 mph), the brakes are fully applied, and the wheels lock;

The wheels' speed = 0 km/h (0 mph)

$$\text{Slippage ratio} = \frac{10\ (6) - 0}{10\ (6)} \times 100 = 100\ (\%)$$

Slippage between tires and road surface is 100%

05E0PX-009

Braking Characteristics

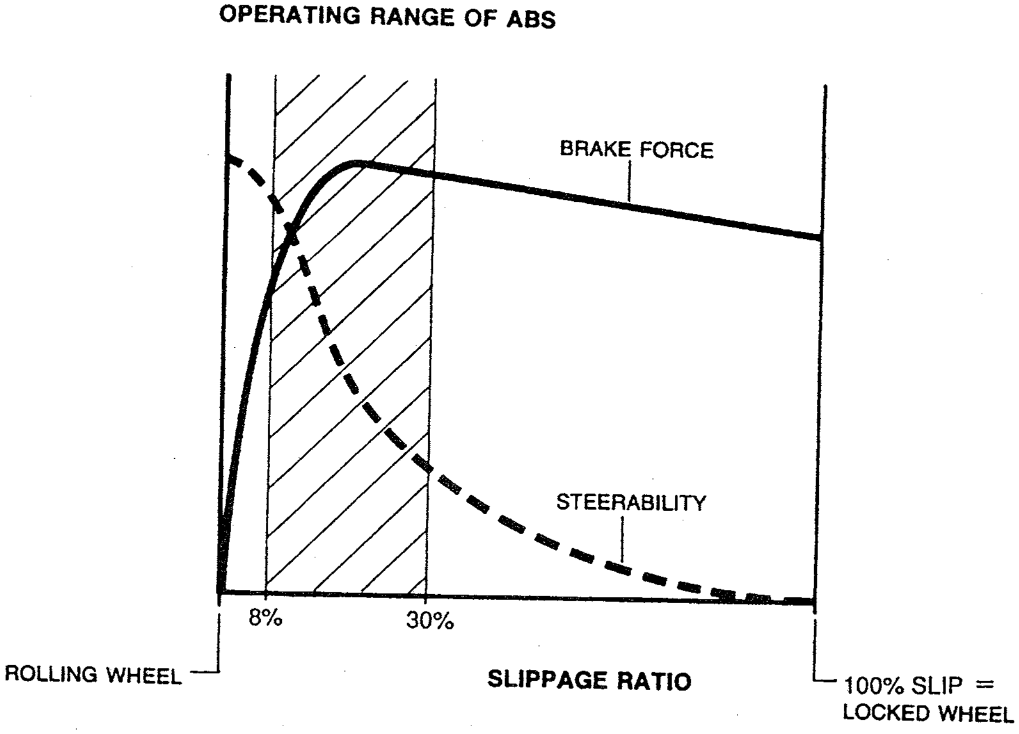

05E0PX-010

When the brakes are applied, the braking force applied to the road surface increases sharply, reaching a maximum point, after which it decreases. When the brakes are applied, the wheel speed also decreases. The wheel speed is less than the vehicle speed, and this causes slippage between the road surface and the tire. Braking forces depends upon the coefficient of slippage between a tire and the road surface. Braking forces can effectively slow a vehicle when the slippage ratio is in the range of 8%—30%. Within this range steerability is sufficient to steer the vehicle during full braking application because the tires are still gripping the road surface.

Outline of Anti-Lock Brake Operation

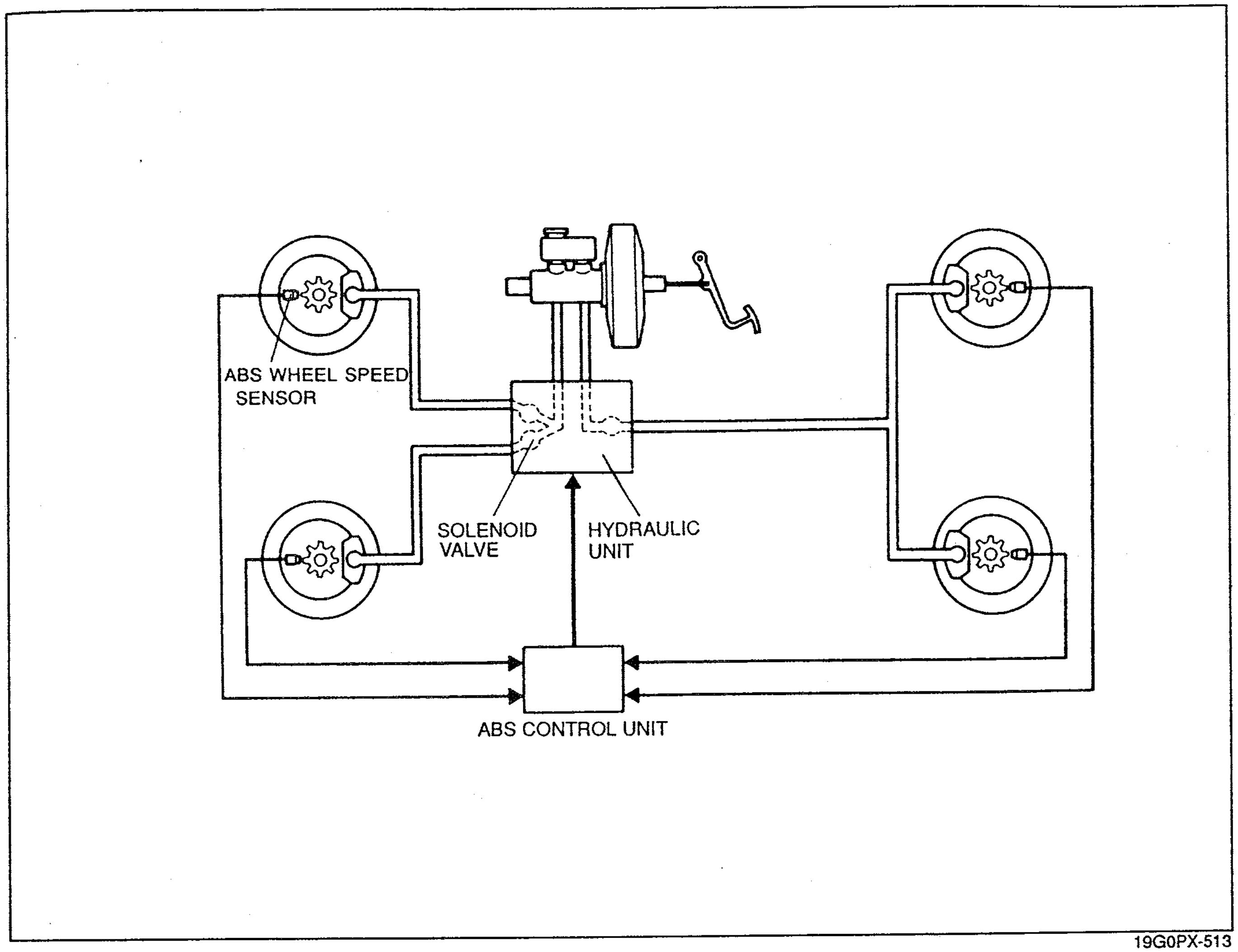

The wheel speed sensors relay continues wheel speed signals to the ABS control unit.
The control unit processes these signals into pressure change commands for the solenoid valves in the hydraulic unit. When the control unit recognizes that a particular wheel is about to lock, it brings about an adjustment of the hydraulic pressure.
The hydraulic pressure to the front wheels is adjusted individually. The pressure to both rear wheels, however, is adjusted simultaneously. This adjustment of the rear wheels is determined from the particular wheel which is about to lock. In this way, the other rear wheel is able to transmit more lateral driving force.
This is the 3-channel control system; individual control for the front wheels and dual control for the rear wheels.

By means of the solenoid valves in the hydraulic unit, the hydraulic pressure in the brake circuits can be reduced, retained or increased. Due to this continual control, the hydraulic pressure is precisely adjusted.
The fail-safe circuit in the control unit switches back to normal braking operation (no ABS) if malfunction occurs in the electrical system.

Note
- **When vehicles equipped with ABS are compared to vehicles that do not have ABS, the following distinctive characteristics will be found. The distinctive characteristics in no way indicate an abnormality.**
  When the brakes are applied forcefully or on a slippery road surface:
- **The ABS will activate.**
- **The brake pedal will pulsate and the vehicle and the steering wheel will vibrate slightly.**

PORT-LESS MASTER CYLINDER

NOT OPERATING

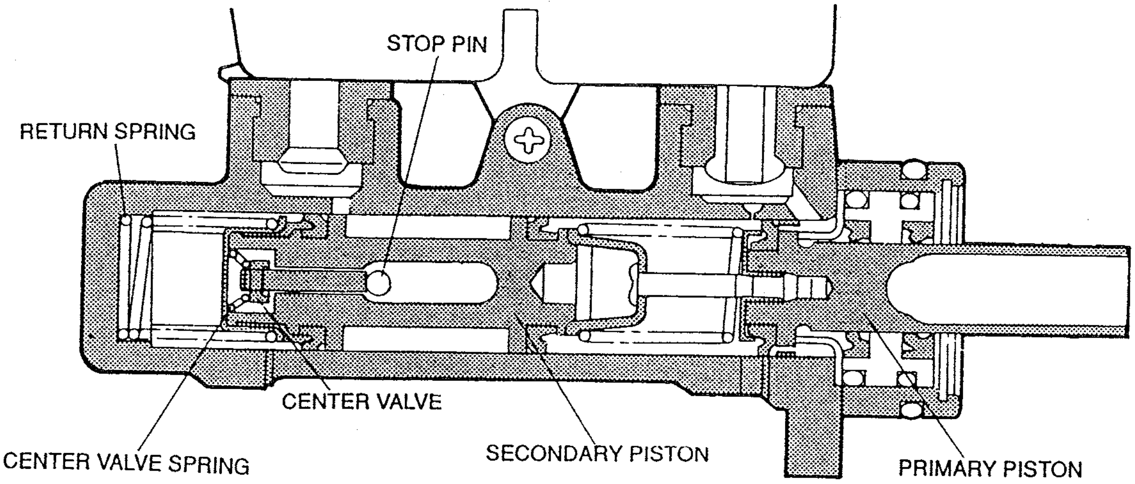

FIGURE ①

OPERATING

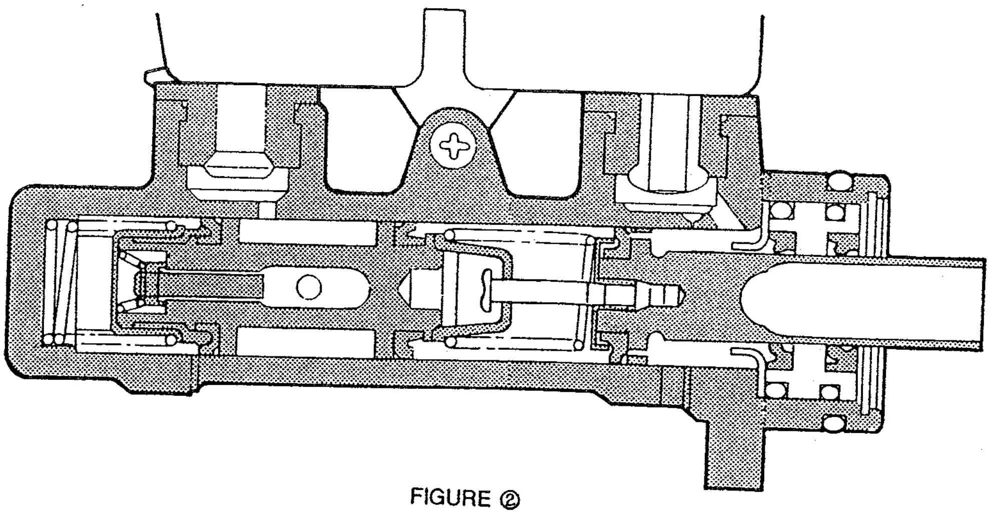

FIGURE ②

19G0PX-518

It has been found, that when the ABS is operated, the brake fluid pressure causes undue wear to the primary cup of the secondary piston. To avoid this problem, the relief port is abolished, and a center valve with a center port is provided in the secondary piston.

When the brake pedal is not pressed, the secondary piston is pressed toward the stop pin by the return spring as shown in Figure ①. At the same time, the center valve within the secondary piston is pressed open by the stop pin, providing a return path to the brake fluid reservoir.

When the brake pedal is pressed, the secondary piston is moved away from the stop pin as shown in Figure ②. The center valve spring presses the center valve against the secondary piston, closing the return path and allowing brake fluid pressure to be generated.

Operation of the primary piston is unchanged.

DAMPING UNIT

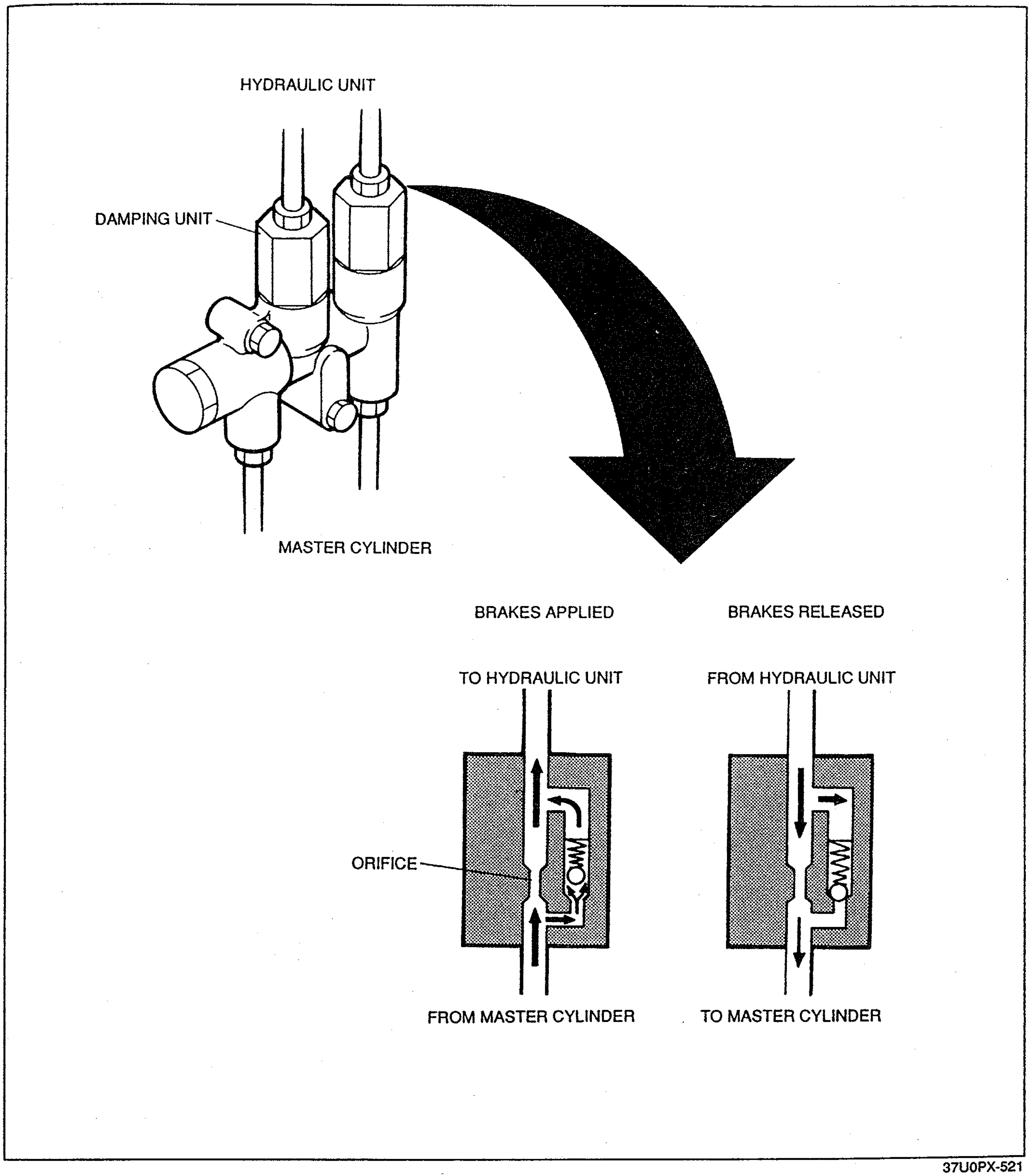

37U0PX-521

The damping units are installed on the proportioning bypass valve.
When the brakes are applied, the hydraulic pressure from the master cylinder passes through the orifice and check valve, allowing smooth build-up of brake fluid pressure.
When the brakes are released, the hydraulic fluid from the hydraulic unit acts upon the orifice and the check valve, but because the passage of the check valve is closed by the ball, the fluid returns through the orifice only to the master cylinder. Thus, kick back (pulsation) of the brake pedal is limited.
Do not remove the damping unit from the proportioning bypass valve. When replacing, remove the proportioning bypass valve as an assembly.

ABS WHEEL SPEED SENSOR

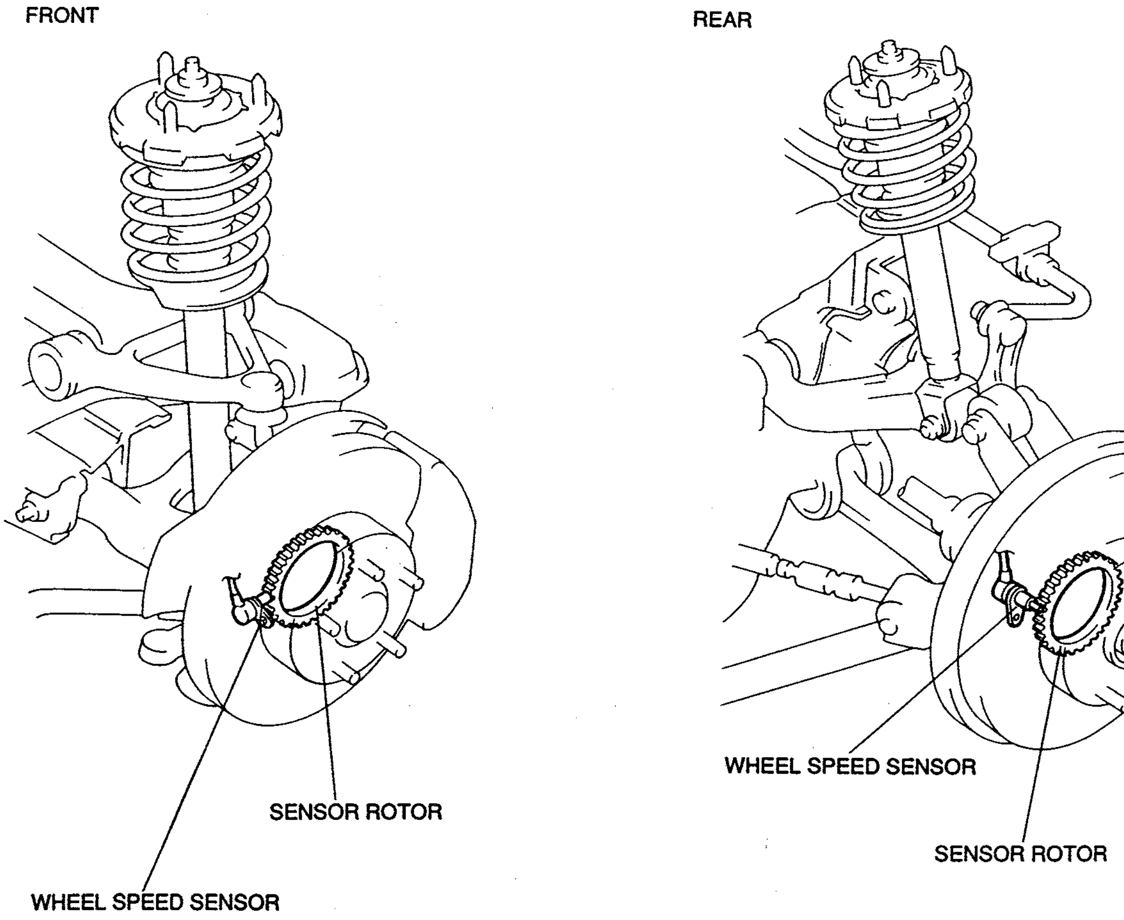

05E0PX-014

Structure

The wheel speed sensors are installed on the knuckles. These produce electrical pulses via rotation of the sensor rotor installed on the wheel hub or the drive shafts.

Function

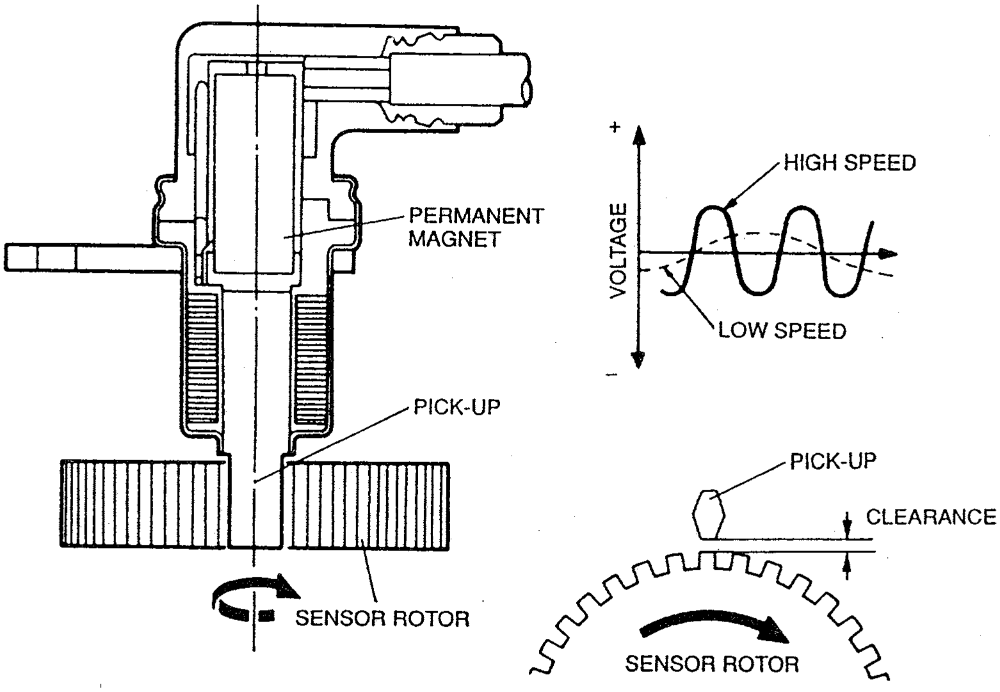

67G11X-511

The sensor rotor on the wheel hub interrupts the magnetic fields of the wheel speed sensor. This produces an AC voltage which changes as the wheel speed changes. Voltage waves are sent to the control unit as wheel speed signals.
The sensor is mounted so that there is a small clearance between the speed sensor pick-up and the sensor rotor.

HYDRAULIC UNIT

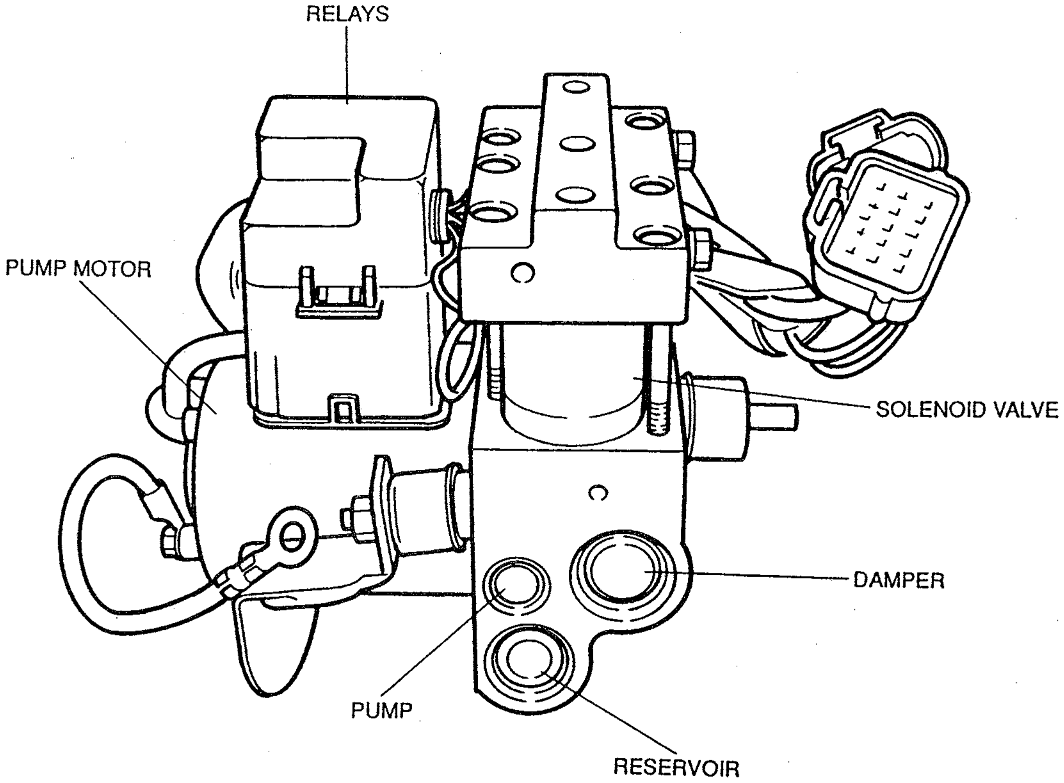

05E0PX-015

Based on the commands from the ABS control unit, the hydraulic unit controls the hydraulic pressure to the wheels by activating the solenoid valves.
The hydraulic unit has three solenoid valves which operate the 3-channel system.
Two of these valves are for individual front wheel control and the other valve is for pressure regulation of the rear brake circuit.
The hydraulic unit is installed within the engine compartment.

Solenoid Valve

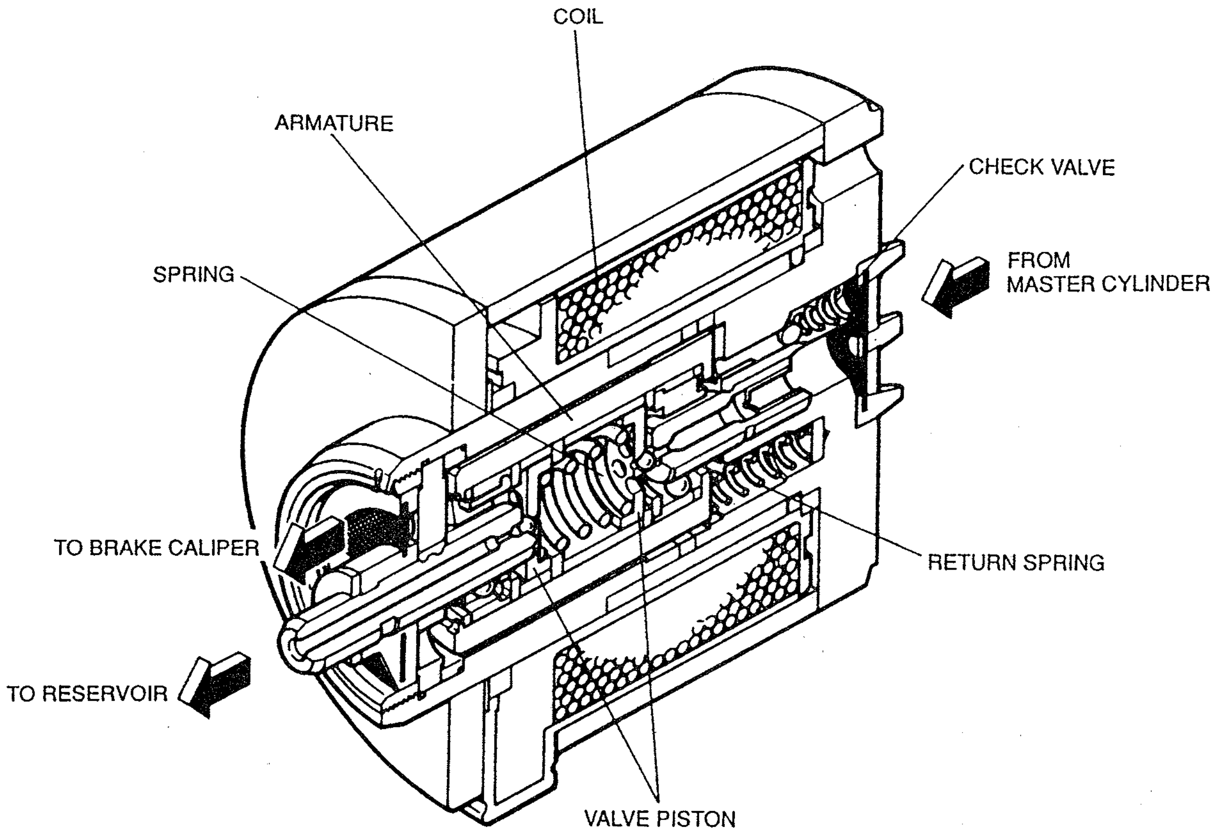

05E0PX-016

Structure

The main parts of the solenoid valve are the armature, the coil, two valve pistons, the check valve, and the return spring.
The valve pistons within the armature are held outward by the spring.
During ABS operation the valve pistons open or close the fluid passages from the master cylinder or to the reservoir.

Function

Normal braking and pressure increase

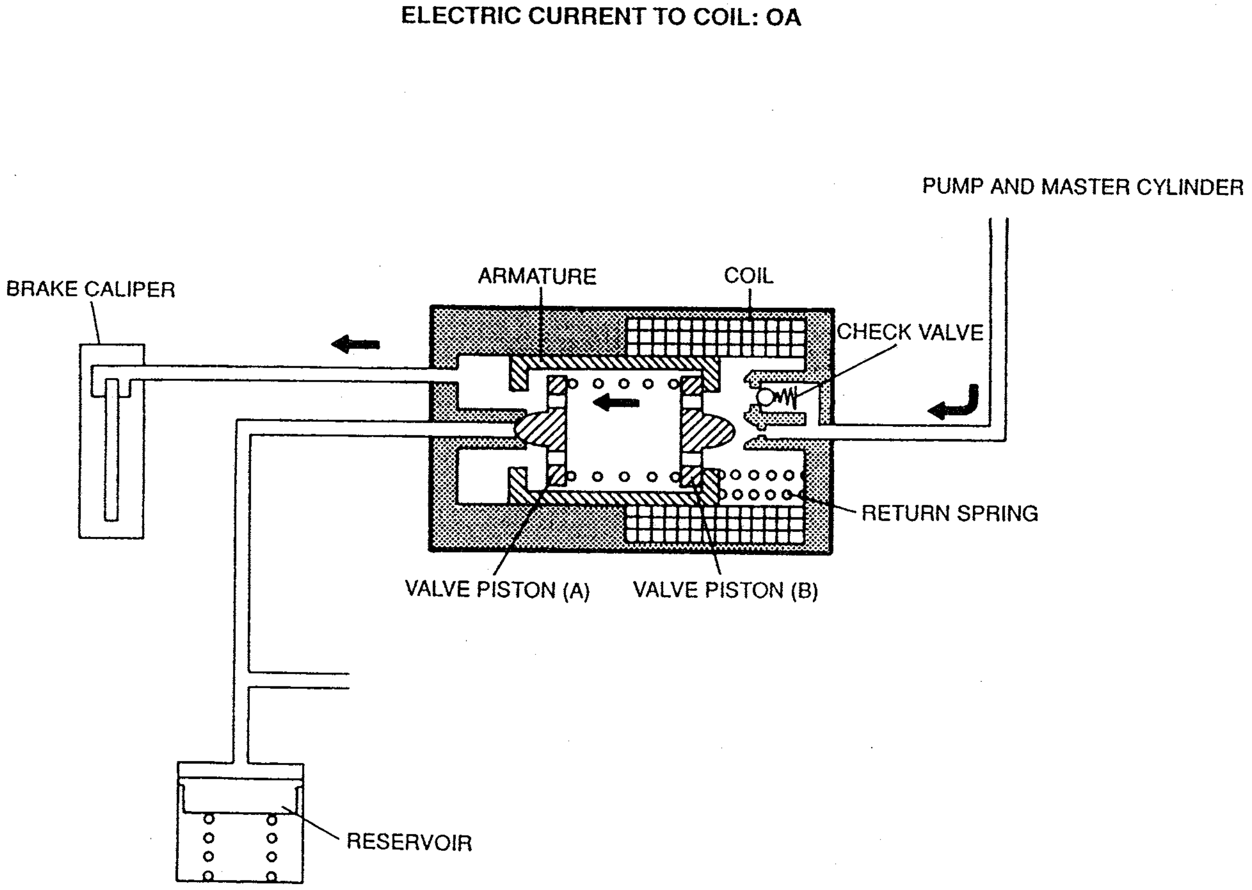

05E0PX-017

During normal braking and pressure increase, there is no current flow in the coil and the armature is held to the left by the return spring.
Because the passage to the reservoir is closed by valve piston (A), the hydraulic pressure from the master cylinder acts upon the brake caliper only.

Pressure retention

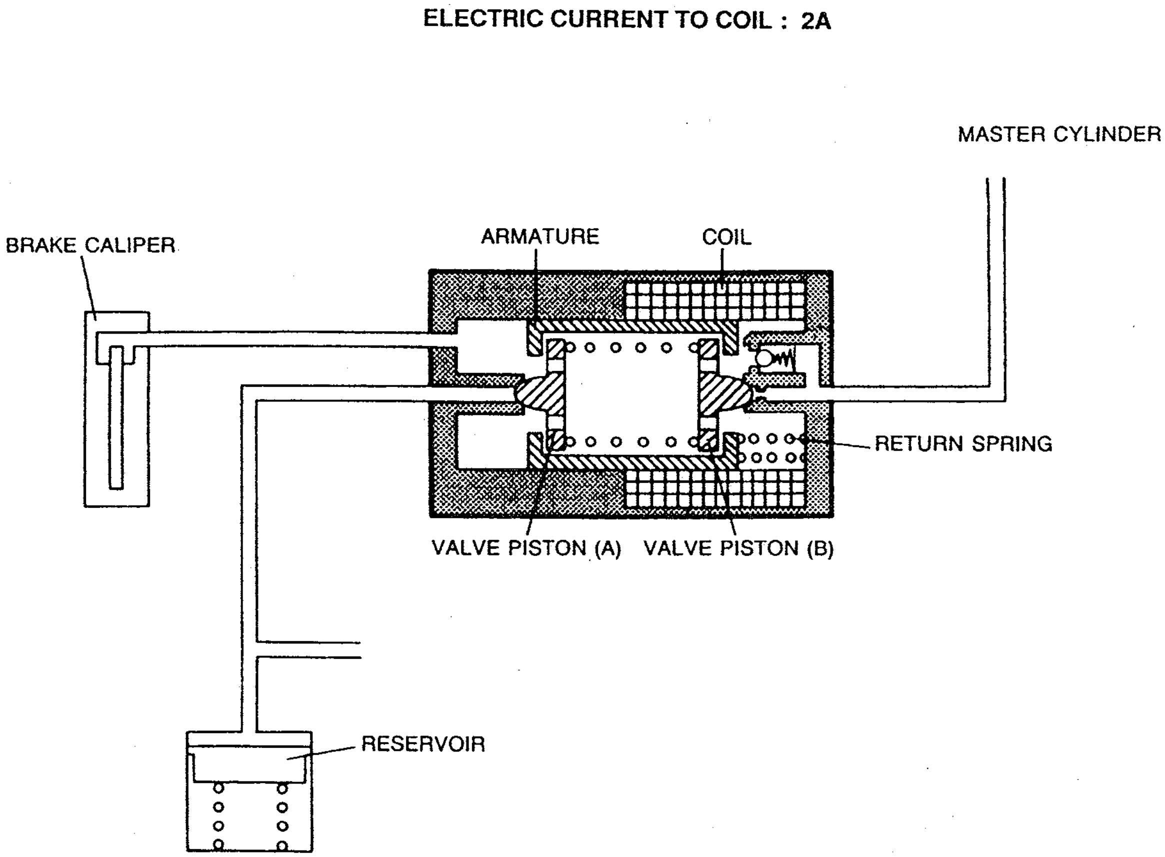

05E0PX-018

To retain the pressure, a current of 2A flows to the coil and attracts the armature. This overcomes the force of the return spring, and the armature moves toward the right, stopping at the center of the solenoid valve. The passage to the reservoir remains closed by valve piston (A), and the passage from the master cylinder is closed by valve piston (B). At this time the hydraulic pressure within the brake caliper is retained.

Pressure reduction

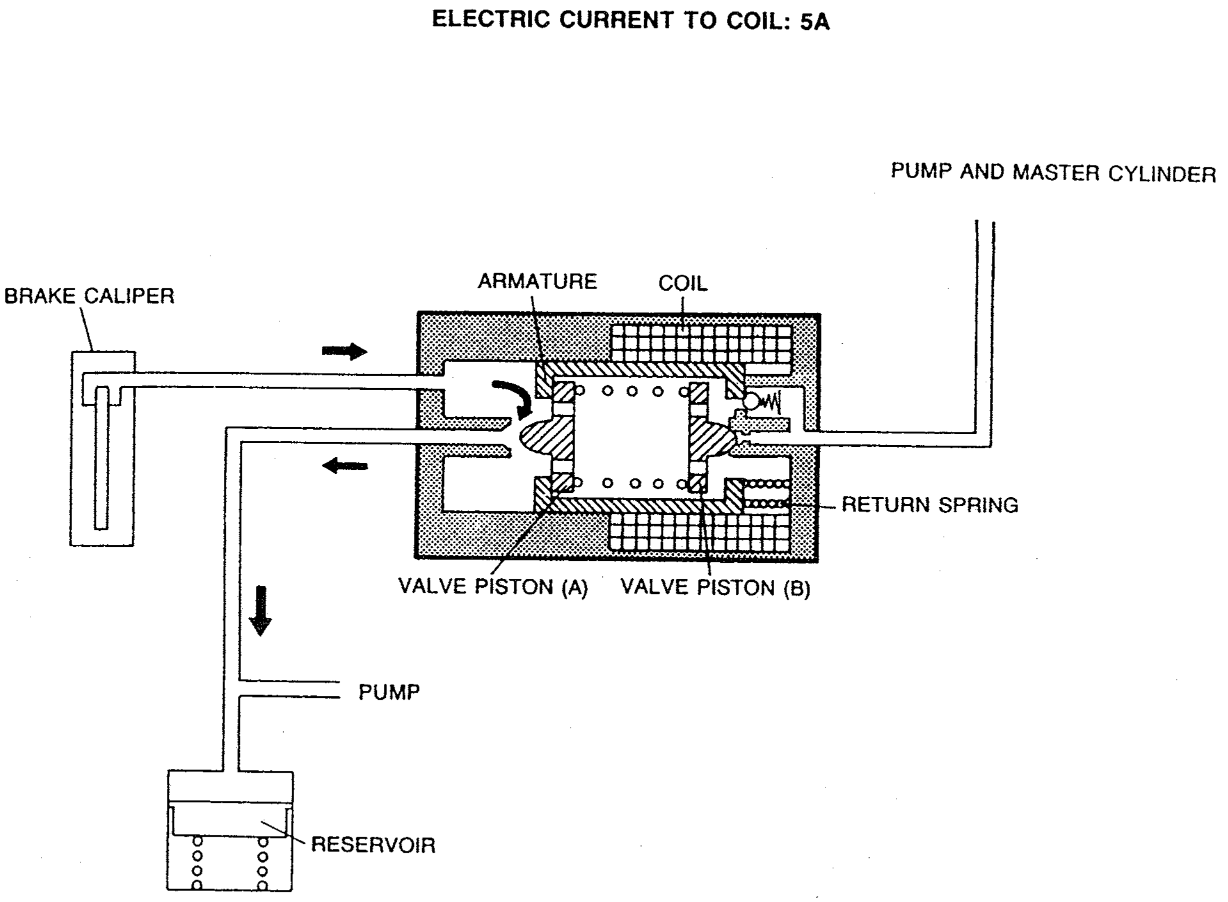

05E0PX-019

During pressure reduction, a current of 5A flows to the coil and further attracts the armature. This overcomes more of the force of the return spring, and the armature moves farther to the right than during pressure retention. Valve piston (B) closes and no hydraulic pressure flows from the master cylinder. Valve piston (A) opens, allowing the hydraulic pressure to escape from the brake caliper to the reservoir.

Reservoir

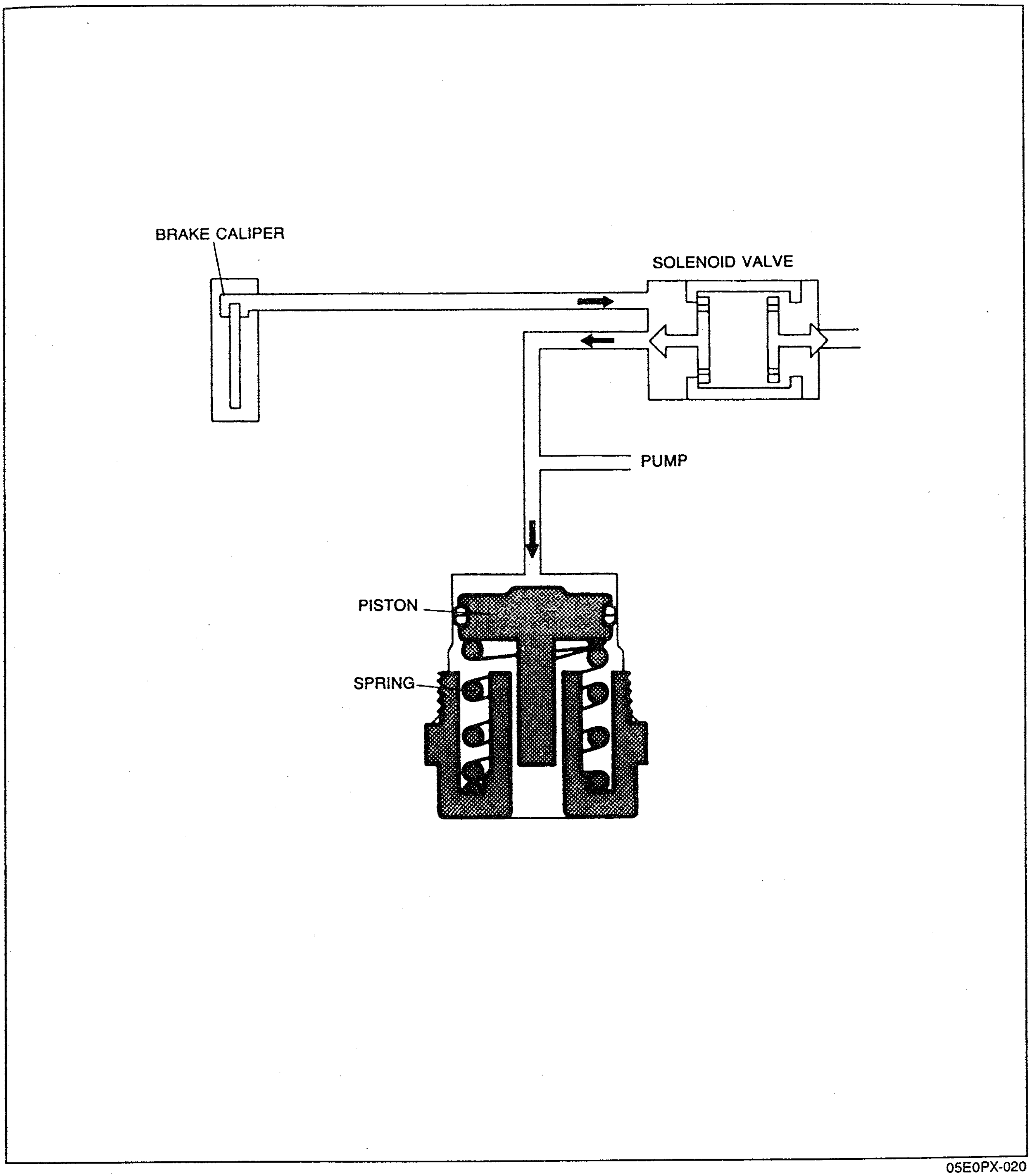

05E0PX-020

Structure

The two main components of the reservoir are the piston and the spring.
The hydraulic pressure within the reservoir when it is filled is approx. **294 kPa {3.0 kgf/cm², 43 psi}**.
There are two reservoirs within the hydraulic unit.

Function

The reservoirs temporarily stores the hydraulic pressure which flows from the brake caliper though the solenoid valve during pressure reduction.

Pump

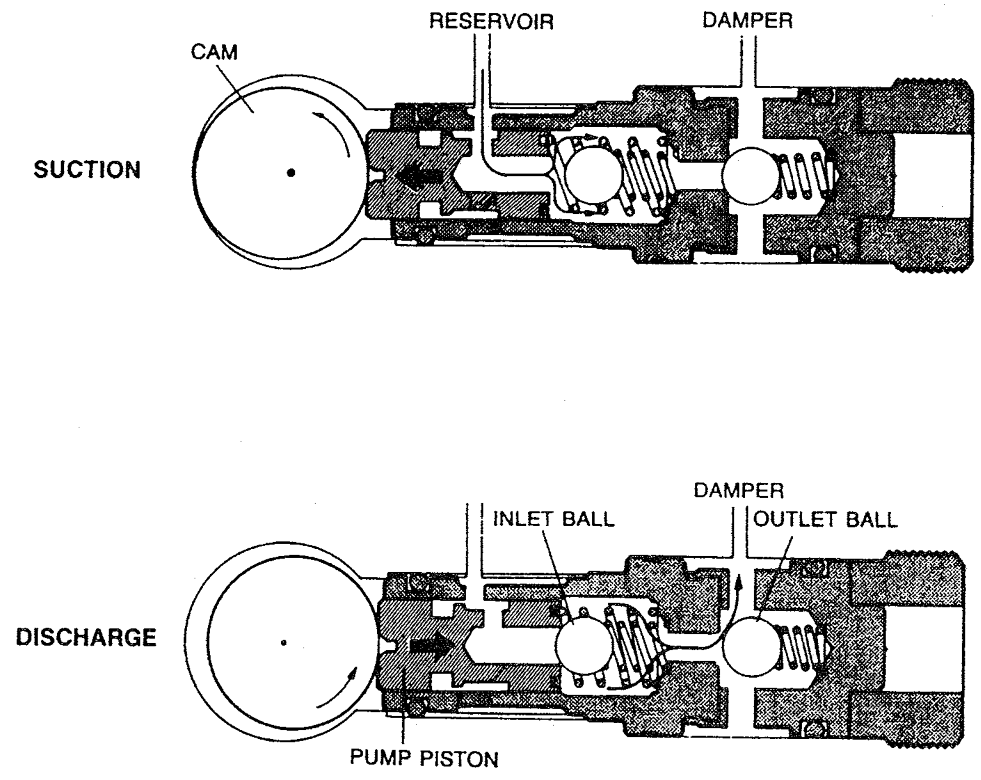

05E0PX-021

Structure

The main components of the pump are the cam, pump piston, inlet and outlet balls, and springs. The pump piston is driven by the pump motor cam.

Function

Suction

As the pump motor rotates the cam, it releases the pressure against the pump piston and the spring moves the piston toward the left.

As this happens, the volume of the inlet chamber increases and hydraulic pressure flows in from the reservoir, opening the inlet ball.

Discharge

As the cam presses the pump piton toward the right, the volume of the inlet chamber decreases and the hydraulic pressure in the inlet chamber pushes open the outlet ball and flows to the damper.

Damper

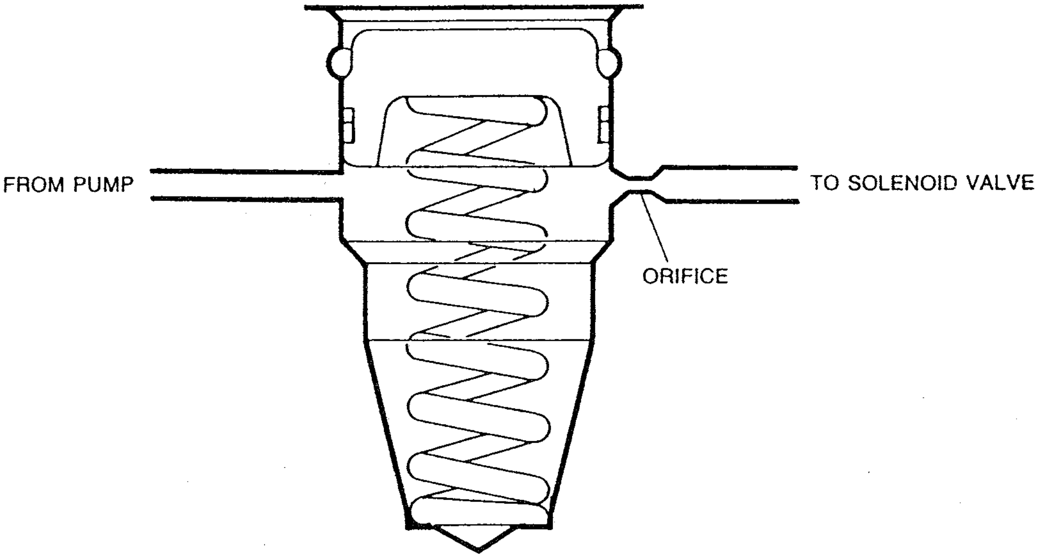

05E0PX-022

The damper prevents transfer of hydraulic pressure from the pump back to the master cylinder and limits pulsation of the brake pedal caused by pressure fluctuations.

Function Diagram

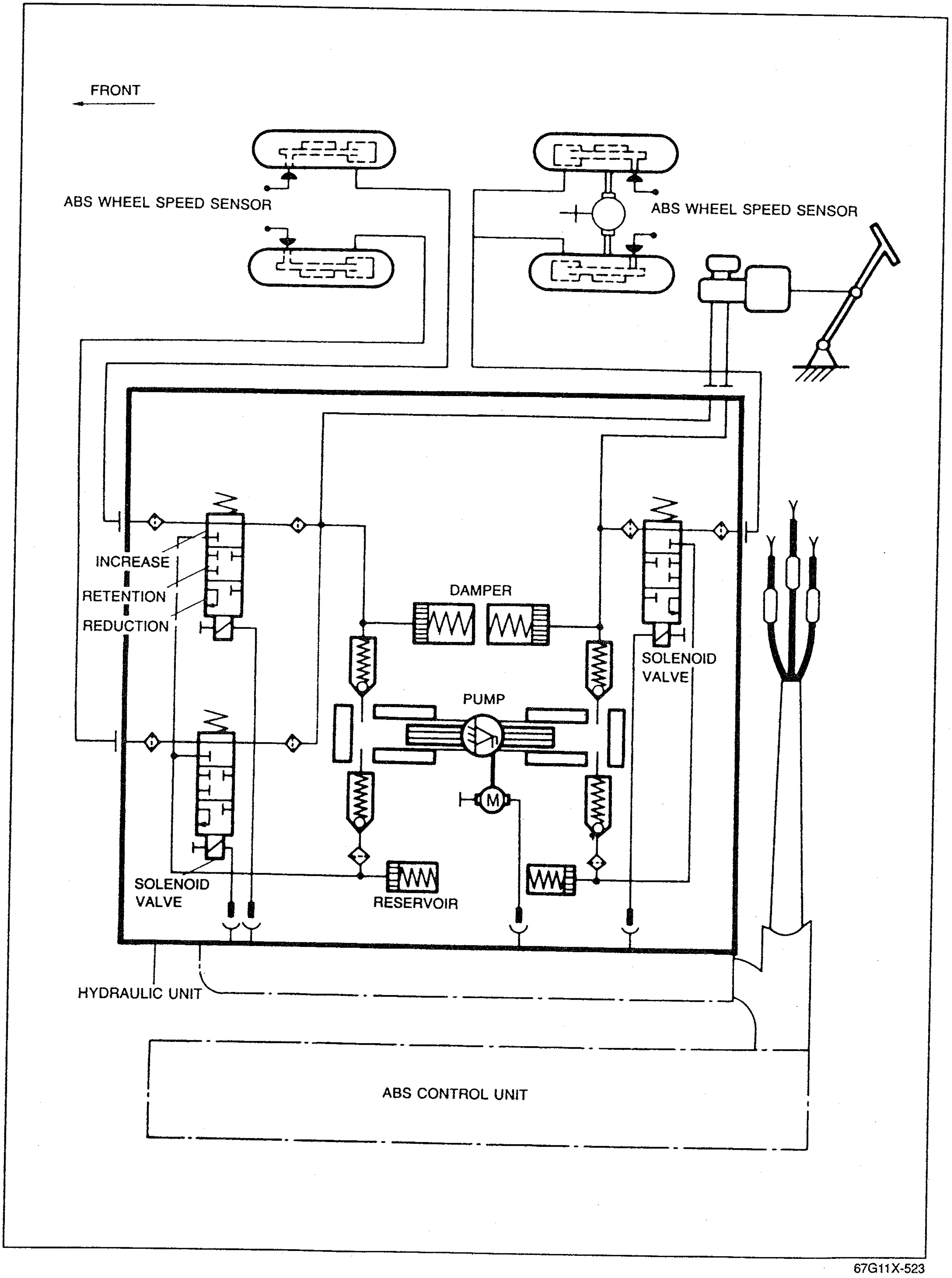

67G11X-523

ABS CONTROL UNIT

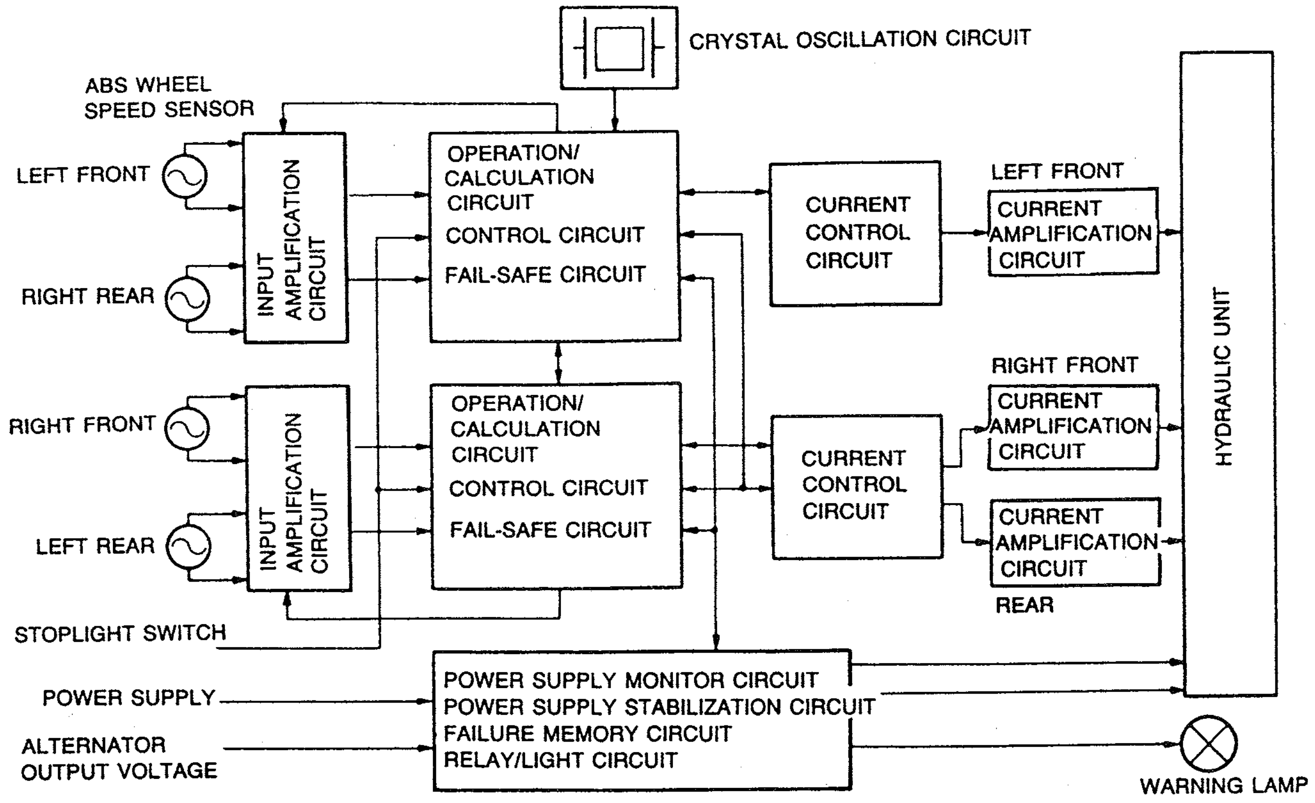

05E0PX-024

The ABS control unit detects wheel speeds and evaluates the situation of the wheels based on the signals from the speed sensors.
Based on the program within the control unit, the control unit then relays signals to the solenoid valves and the pump motor within the hydraulic unit to control wheel lock-up.

Circuits and functions

Input amplification	Converts AC voltage from wheel speed sensors to square waves (sine waves) for ABS control unit.
Operation/calculation	Detects wheel speeds from input sine waves and generates wheel increase/decrease speed signals and slippage signals.
Control	Receives signals produced by operation/calculation circuit and generates signals to operate solenoid valves.
Fail-safe	Monitors operation of system. If failure is detected, circuit generates failure-memory, valve relay cut, and warning lamp illumination signals.
Power supply monitor	Monitors battery voltage and power supply stabilization circuit.
Power supply stabilization	Provides stable power supply for ABS control unit.
Failure memory	Memorizes failure conditions if failure is detected.
Relay/light	Acting on signals from fail-safe circuit, stops operation of valve relay, causes warning lamp to illuminate, and shuts off power supply stabilization circuit, thus shutting down entire system.
Current control	Acting on signals from ABS control circuit, selects current signals to be sent to solenoid valves.
Current amplification	Acting on signals from current control circuit, relays correct current to solenoid valves.

05E0PX-025

ABS Control Cycle

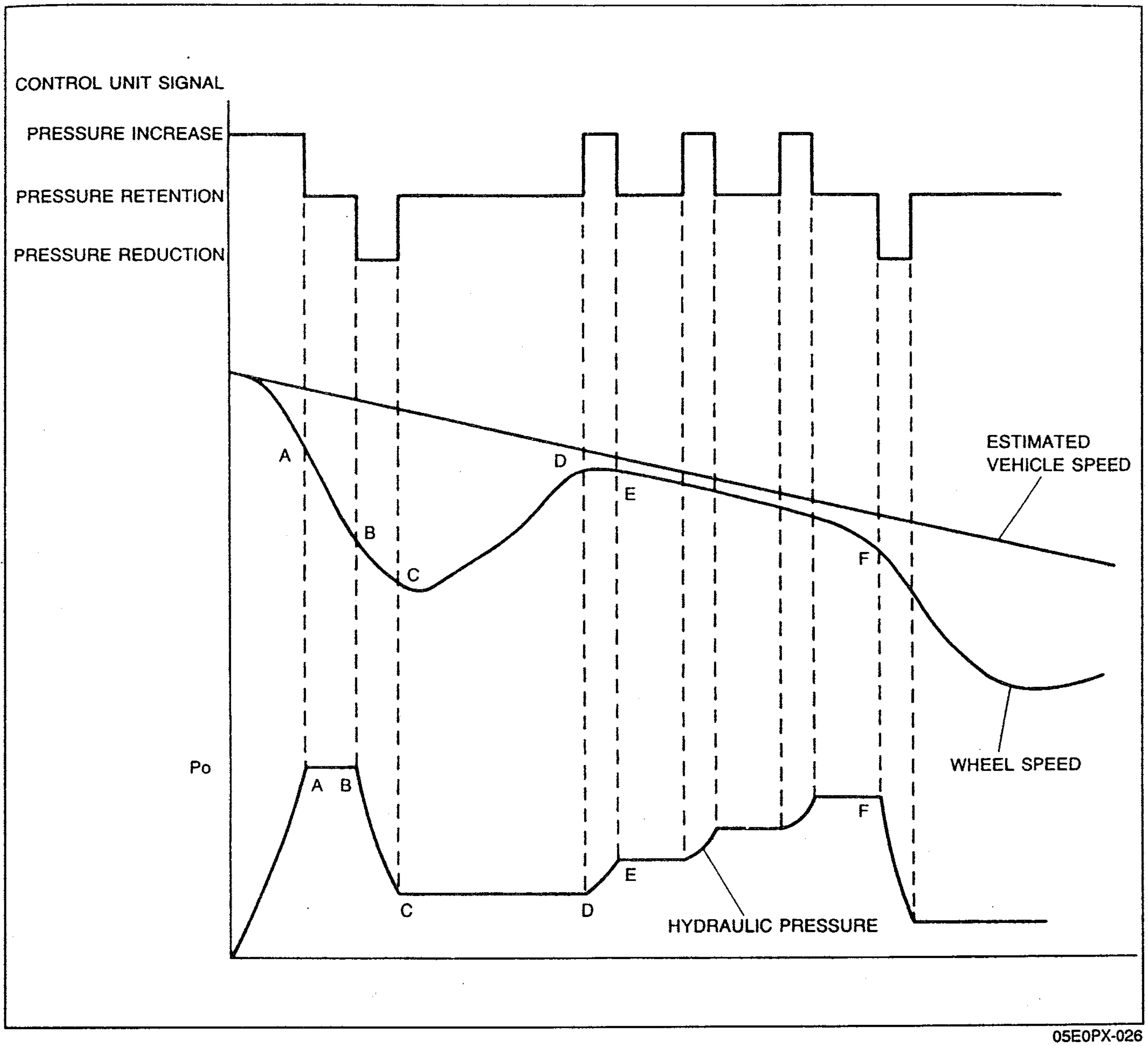

05E0PX-026

The control unit computes the rotational speed of each individual wheel, based upon signals received from the four wheel speed sensors, and also computes the wheels' deceleration and acceleration, and thereafter projects an estimate of the vehicle speed.
The control logic is explained in a simple manner based on the illustration above.
When the brake pedal is firmly depressed, the speed of the wheel begins to decrease, which is subsequently followed by a tendency toward locking up (point A).
At that point, the ABS control unit, in order to check for wheel lockup, computes the wheel slippage ratio, (the difference between the projected estimate of vehicle speed and the wheel speed) and compares the results with the preset formula for determination of lockup.
If it exceeds the preset value, the control unit sends a pressure retention command to stabilize the brake hydraulic pressure. Then, when the hydraulic pressure is reduced, the speed of the wheel begins to increase (point C), the control unit concludes that the wheel may recover its speed.
It therefore sends a pressure retention command to hold the current hydraulic pressure .
When the wheel speed reaches point D, the control unit concludes that the wheel is no longer in danger of locking up, and sends a command for increasing braking pressure.
The hydraulic pressure is then increased by repetition of increase and retention commands to regulate the braking force (point D-F).
If the wheel tends to lock again (point F), the cycle begins again to control wheel speed.

Fail-safe System

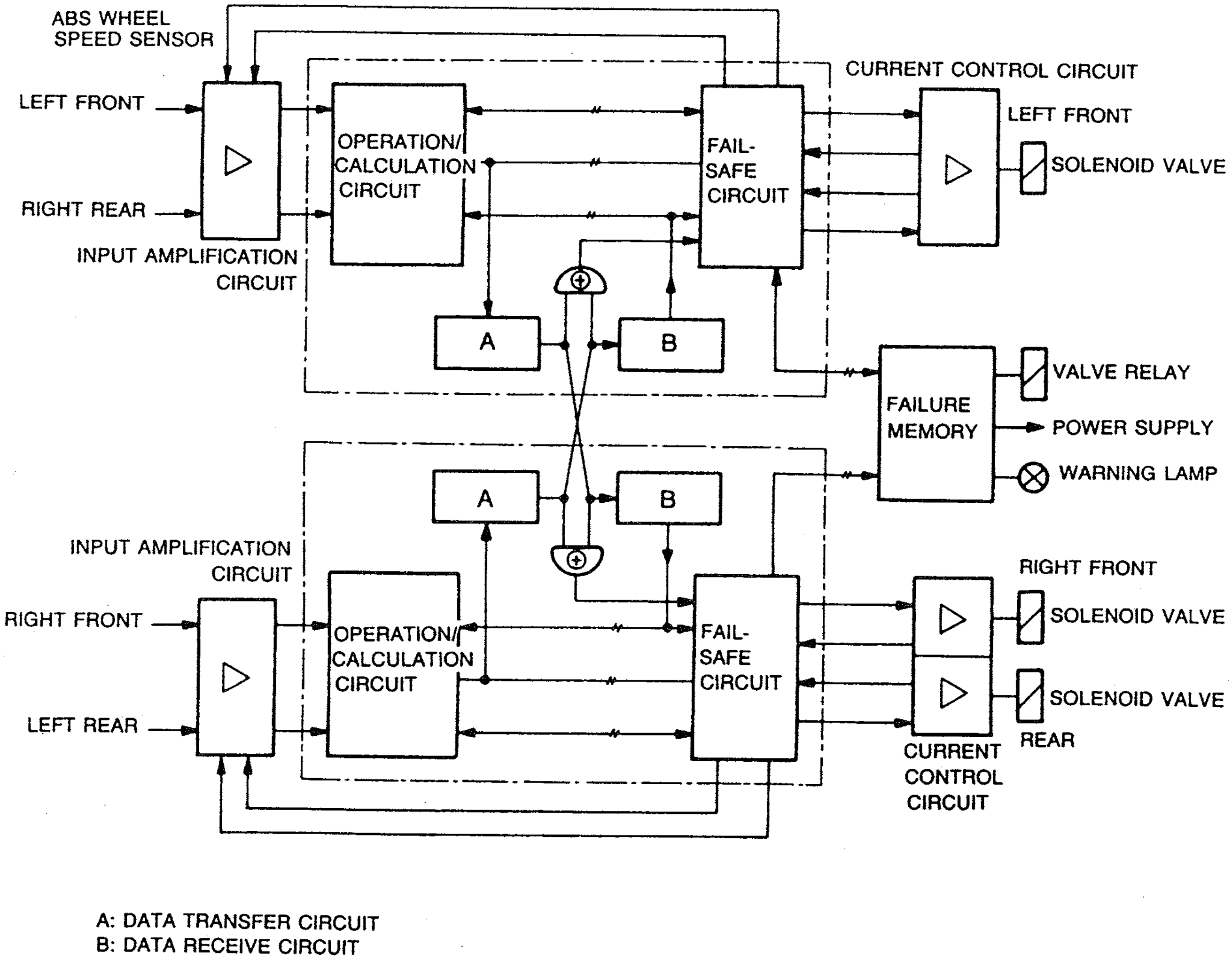

05E0PX-027

The ABS control unit incorporates two circuits which perform the same function so that they can check each other and check for an abnormal conditions in the system.

After the voltage from the speed sensors is converted to sine waves and the wheel speeds are calculated, control signals are output.

These control signals are input to their respective fail-safe circuit, then pass through the data transfer and the data receive circuits, and are input to the other fail-safe circuit. The data from each are then compared. If this comparison indicates an abnormal condition, signals are input to the failure memory circuit from the fail-safe circuit, thus activating the fail-safe system.

Self-diagnosis

The ABS control unit includes a self-diagnosis function which checks for normal operation of the ABS.

Main self-diagnosis	Diagnosis period				Reaction to malfunction	Result
	A	B	C	D		
Fail-safe circuit	○				System shut-down Warning lamp illuminated	Normal braking
Power supply stabilization circuit				○	System shut-down Warning lamp illuminated	Normal braking
Input amplification circuit	○	○	○	○	System shut-down Warning lamp illuminated	Normal braking
Operation/calculation circuit		○	○		System shut-down Warning lamp illuminated	Normal braking
Control circuit		○	○		System shut-down Warning lamp illuminated	Normal braking
Solenoid valves		○		○	System shut-down Warning lamp illuminated	Normal braking
Pump motor		○		○	System shut-down Warning lamp illuminated	Normal braking
Valve relay	○	○		○	System shut-down Warning lamp illuminated	Normal braking
Wheel speed sensors		○	○	○	System shut-down if failure occurs during normal (no ABS operation) driving. Warning lamp illuminated	*Partial control
Battery				○	System shut-down Warning lamp illuminated	Normal braking
Alternator				○	Warning lamp illuminated	ABS available

05E0PX-028

A .... Just after starting engine
B .... Ignition START position to vehicle speed of 6 km/h {4 MPH}
C .... Acceleration from idling to vehicle speed of 6 km/h {4 MPH}
D .... Driving

***Partial control:**
If failure of a sensor occurs during ABS operation, the system is controlled by the remaining sensors until the ABS cycle is completed, then the system is shut-down.

Note

- **The pump motor operates briefly after the vehicle speed reaches approx. 6 km/h {4 MPH} for self-diagnosis of the pump motor. The operating sound is heard only momentarily.**

VALVE RELAY AND MOTOR RELAY

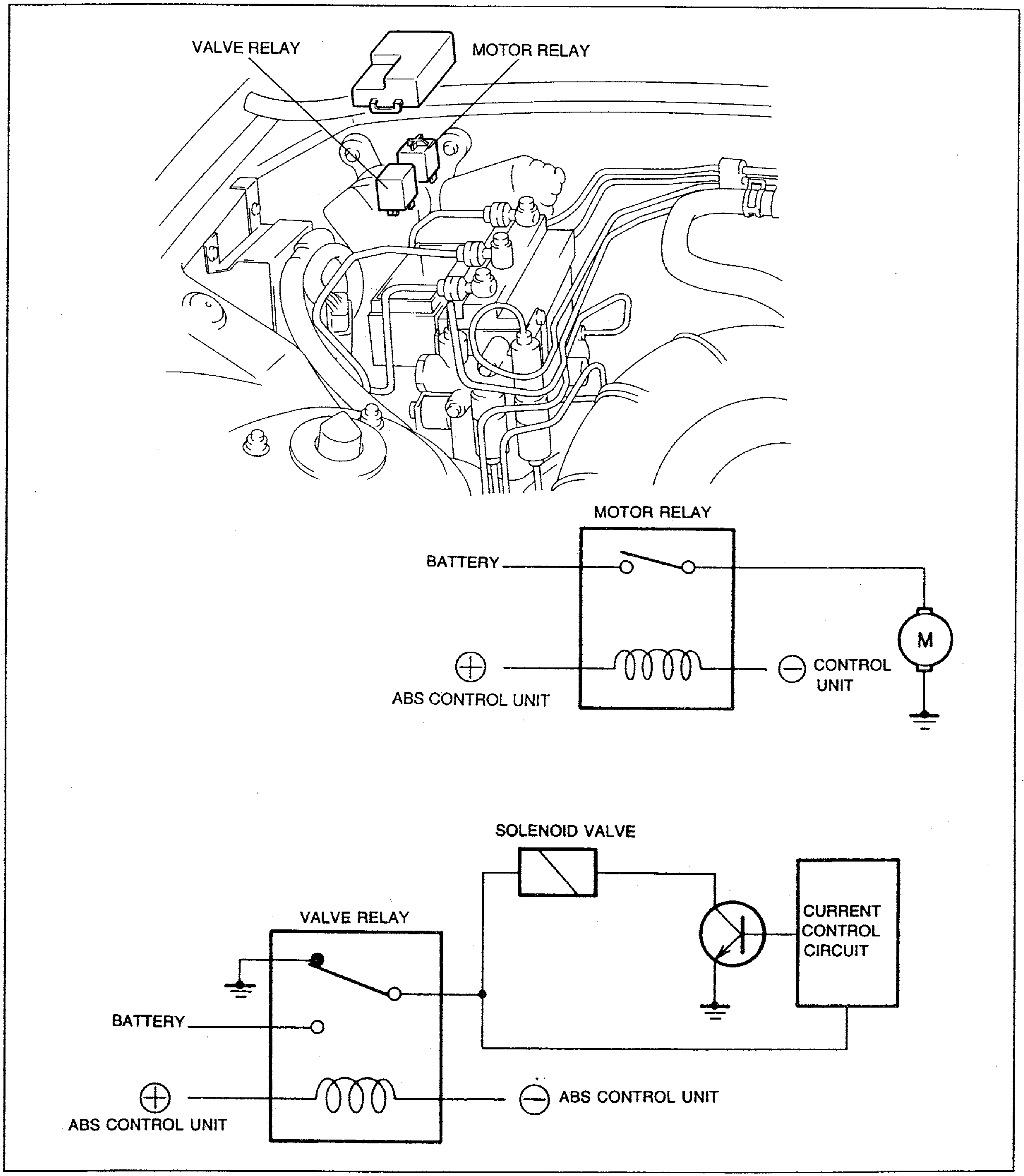

05E0PX-029

Valve relay
The valve relay controls voltage to the solenoid valves.
The valve relay also controls voltage to the current control circuit to switch the transistor ON when ABS is activated.

Motor Relay
The motor relay control voltage to the pump motor.

STOPLIGHT SWITCH

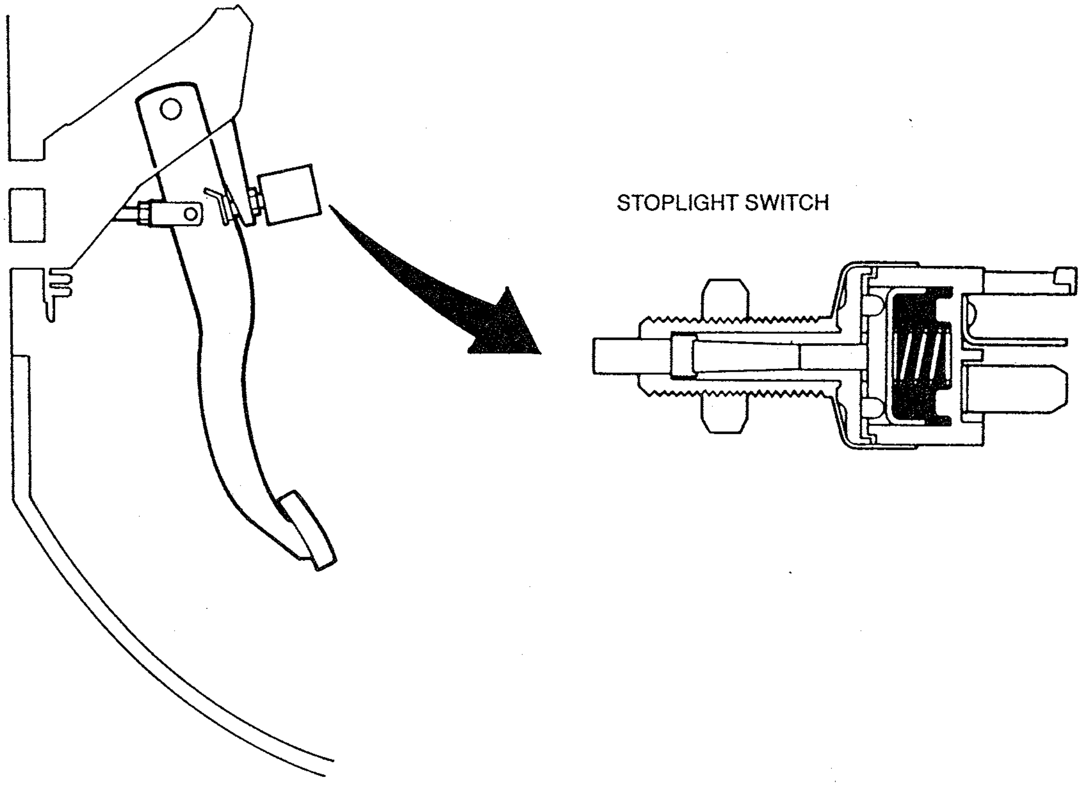

The stoplight switch sends a "brakes ON" signal to the ABS control unit when the brake pedal is depressed. This prevents unwanted operation of the ABS at times it is unnecessary, such as when a wheel has stopped due to hydroplaning.

ABS WARNING LAMP

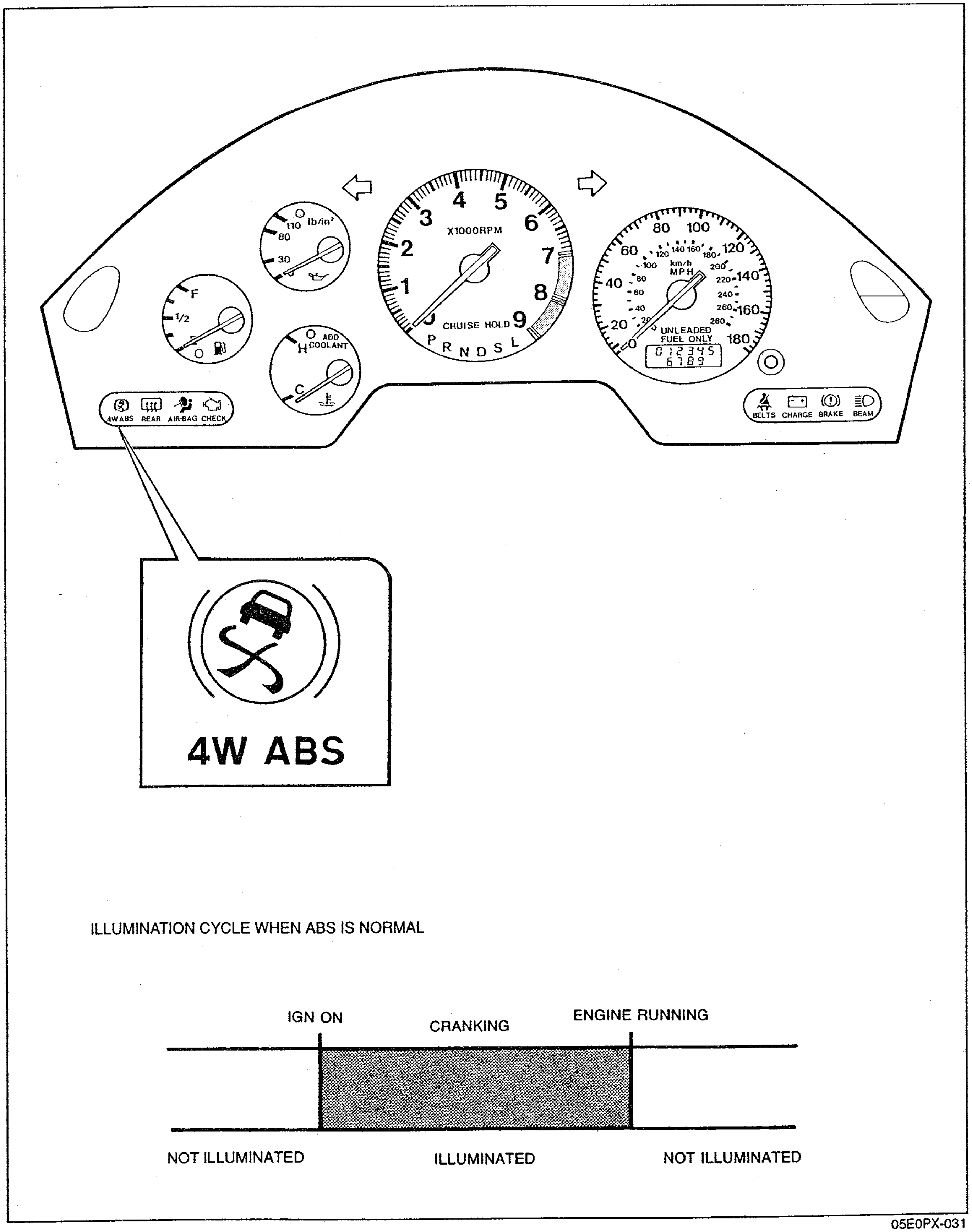

05E0PX-031

The ABS warning lamp is located within the instrument cluster.
If the warning lamp illuminates during driving, it indicates a malfunction in the ABS.

OPERATION OF ABS
Normal Braking
Braking

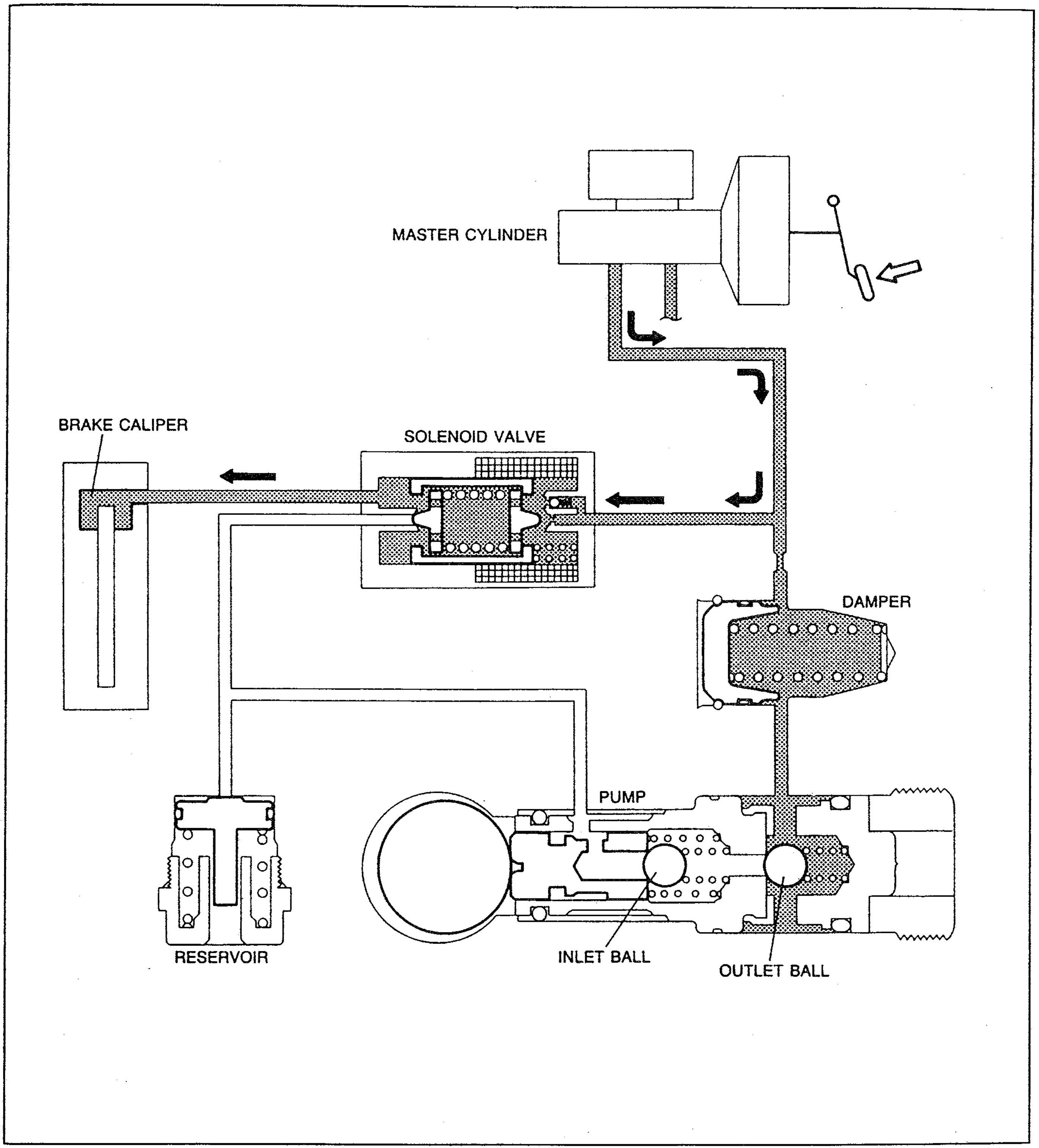

05E0PX-032

When the brake pedal is depressed, the hydraulic pressure from the master cylinder flows to the solenoid valve. During normal braking, because there is no current flow to the solenoid valve, the passage from the master cylinder to the brake caliper is open (the same condition as pressure increase), and the brakes are activated.

The hydraulic pressure which has passed through the damper also reaches the pump but is prevented from flowing through it by the outlet ball.

Brakes released

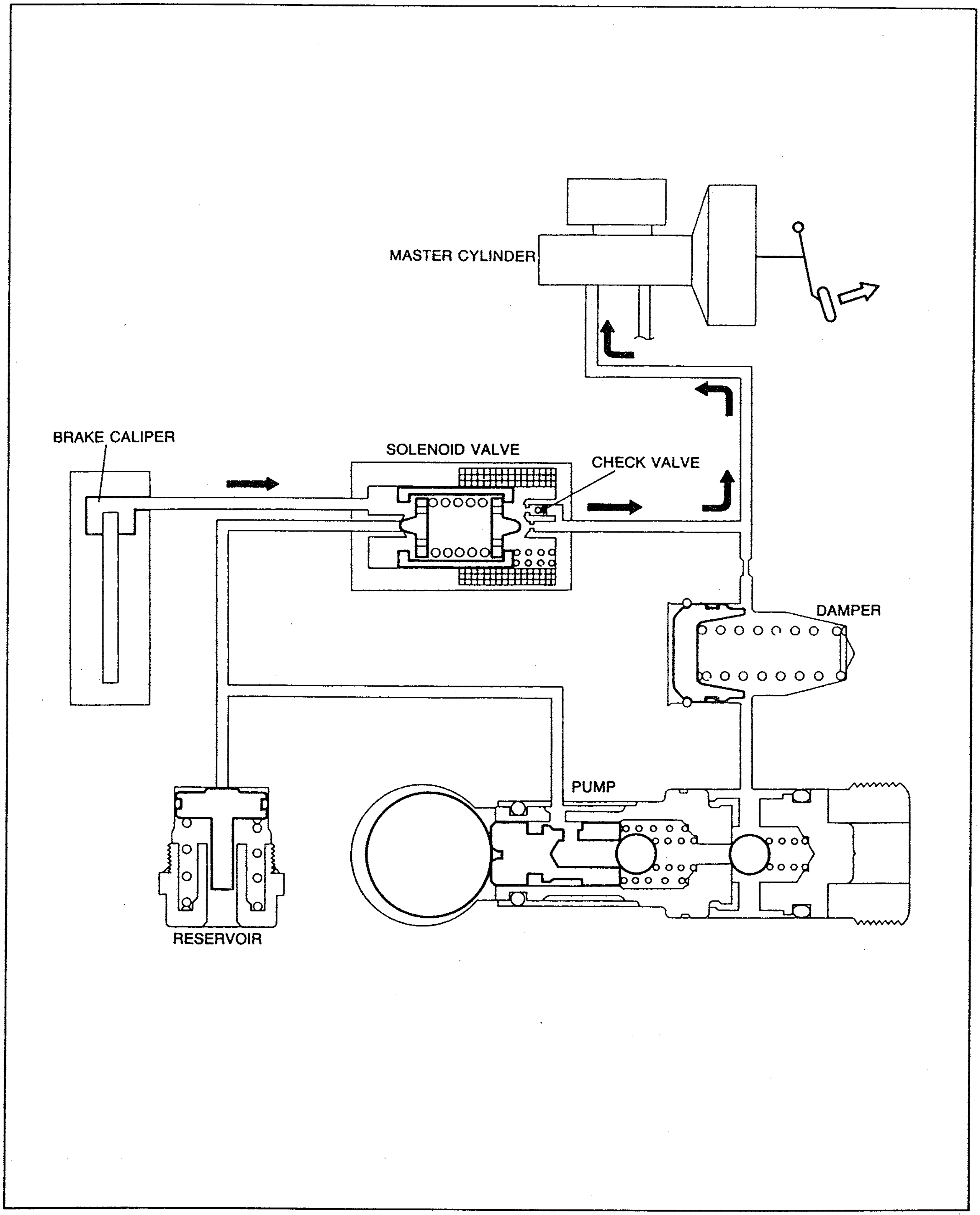

05E0PX-033

When the brake pedal is released, the master cylinder's hydraulic pressure decreases, and the hydraulic pressure from the brake caliper presses the ball of the check valve off its seat and returns to the master cylinder.

Pressure Retention

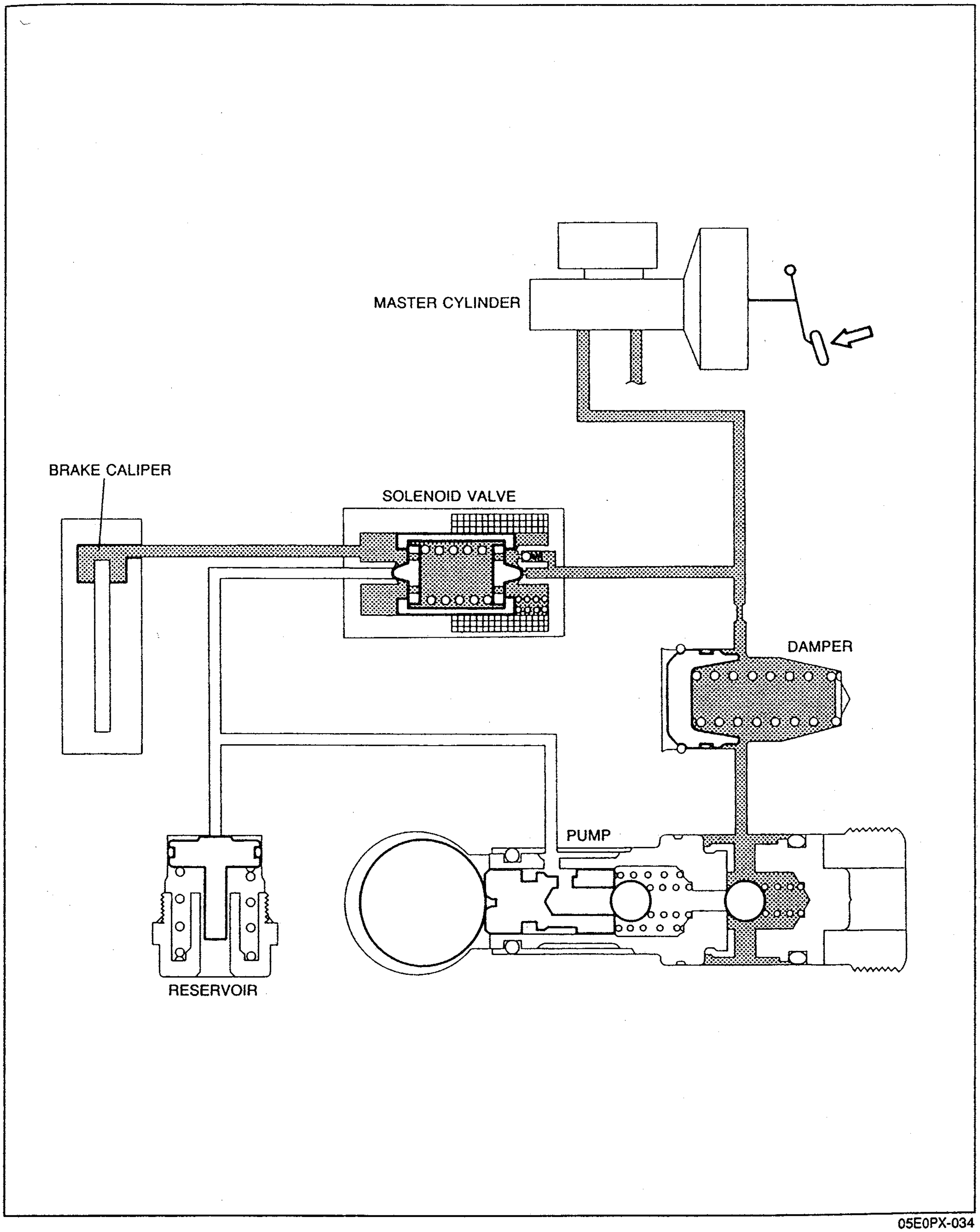

05E0PX-034

When a pressure retention signal is relayed from the ABS control unit to the solenoid valve, the solenoid valve closes the passage to the master cylinder reservoir, thereby retaining hydraulic pressure within the brake caliper.

Pressure Reduction

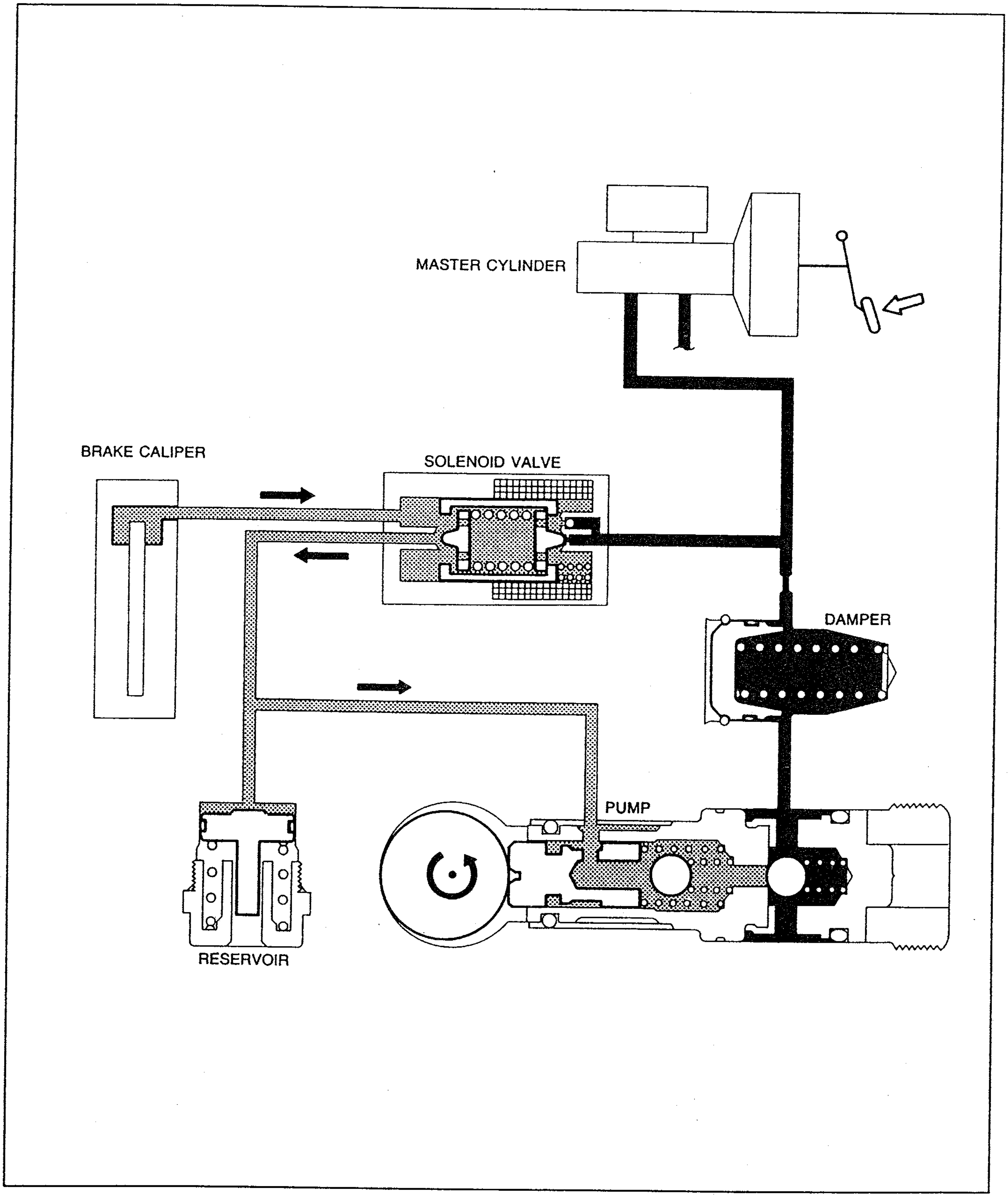

05E0PX-035

When a pressure reduction signal is relayed from the ABS control unit to the solenoid valve, the solenoid valve stops the hydraulic pressure from the master cylinder, and hydraulic pressure is allowed to flow from the brake caliper to the reservoir.

The pressure reduction signal also cause the pump to operate, transferring the hydraulic fluid within the reservoir to the damper.

Pressure Increase

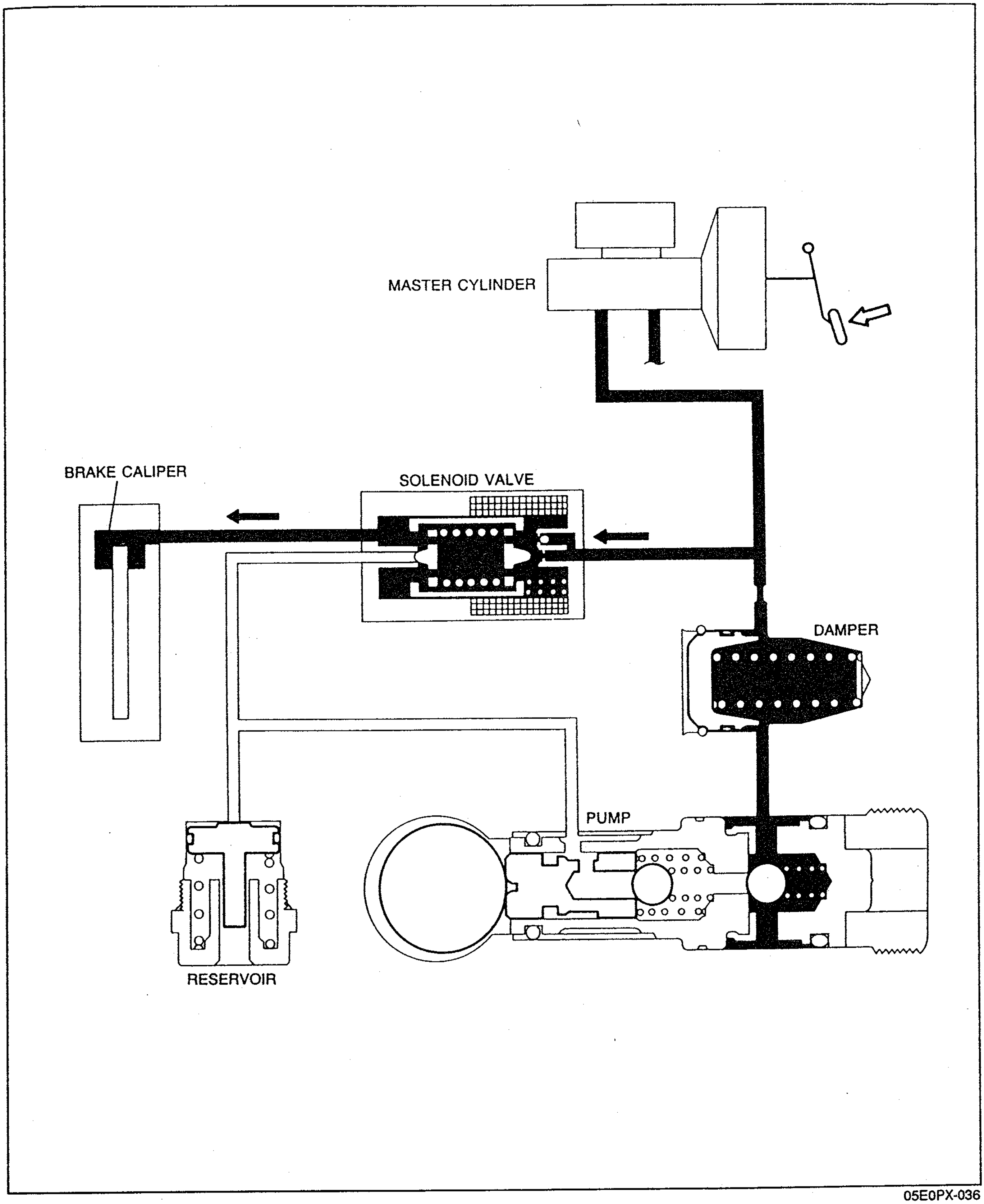

05E0PX-036

When a pressure increase signal is relayed from the ABS control unit, cutting current to the solenoid valve, the solenoid valve opens the passage from the master cylinder to the brake caliper.
When this happens, pressurized hydraulic fluid is sent to the brake caliper, thus again raising the hydraulic pressure in the brake caliper.

TROUBLESHOOTING GUIDE

Outline

The ABS tester is used to locate the cause of a problem within the anti-lock brake system by retaining and reducing the hydraulic fluid pressure in the hydraulic unit.

Because there is no way to check the ABS control unit itself, replace the control unit assembly only after first confirming that the other electrical parts are not faulty.

ABS tester

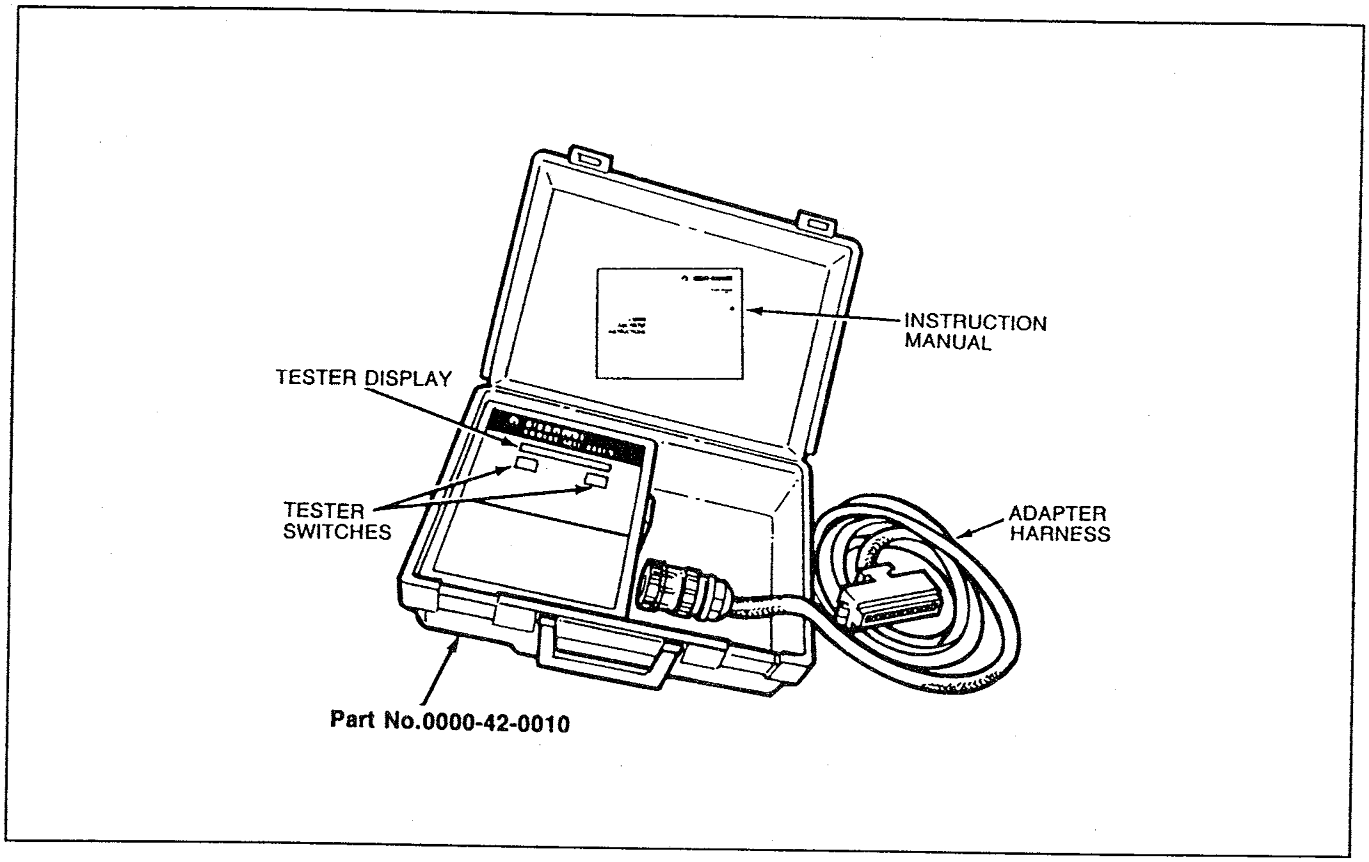

29U0PX-505

Connecting the ABS tester

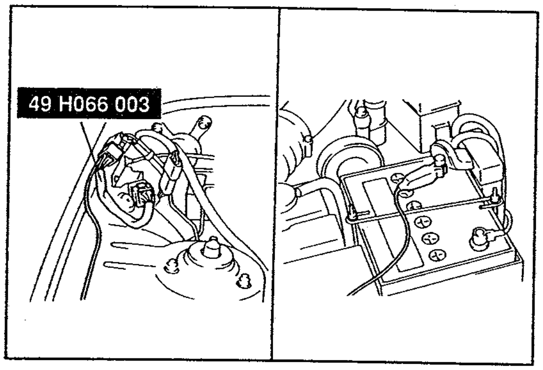

29U0PX-506

1. Turn the ignition switch OFF.
2. Connect the **SST** to the hydraulic unit harness connector and the positive battery terminal.

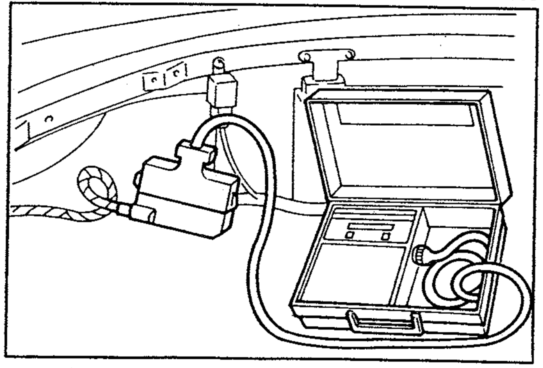

37U0PX-522

3. Remove the trunk side trim.
4. Remove the ABS control unit.
5. Disconnect the control unit connector and connect the ABS tester to the control unit connector at the harness side.

Explanation of instruction procedure

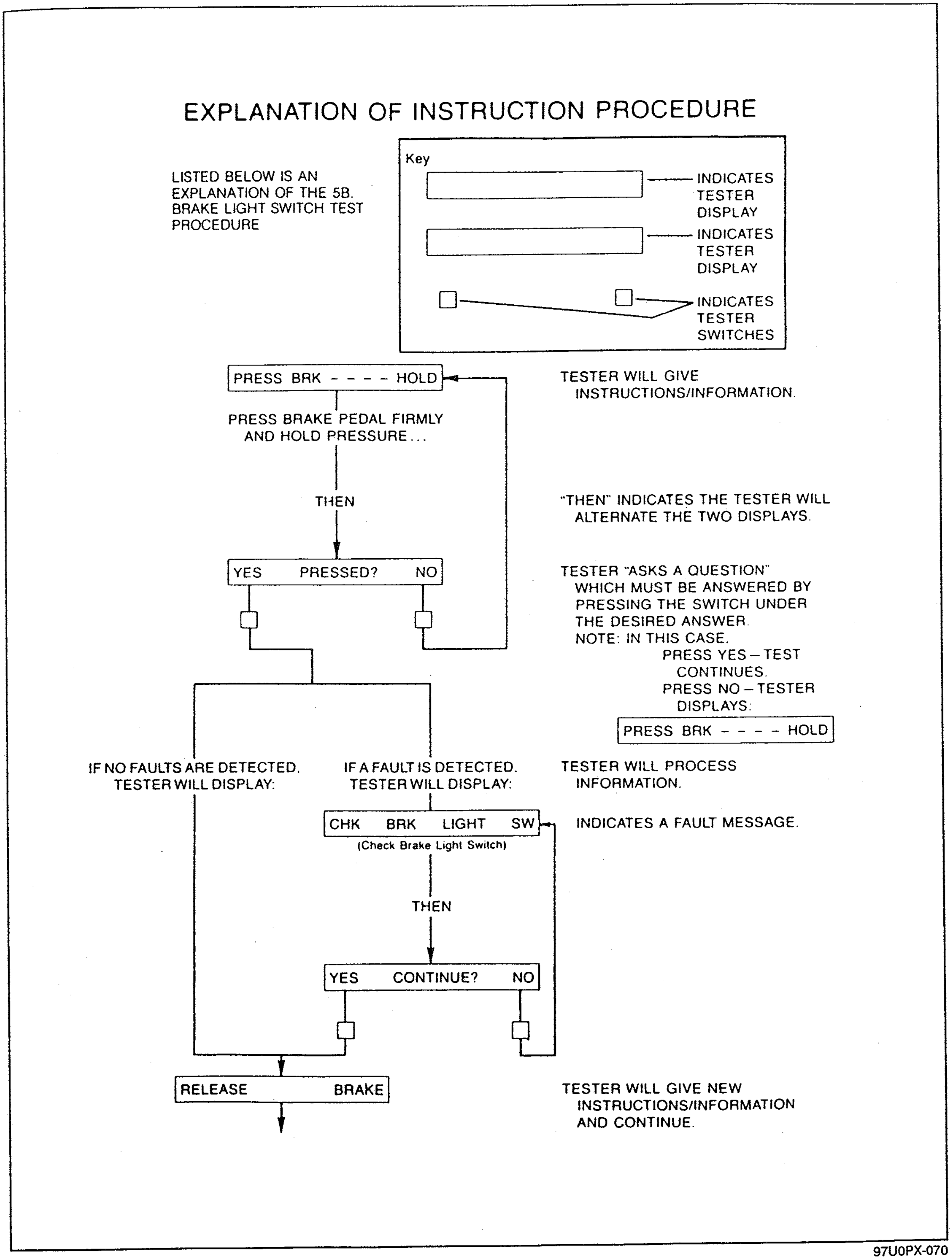

97U0PX-070

Troubleshooting procedure

ITEM	
1. CONNECTION/POWER-UP	1. LOCATE ABS CONTROL UNIT. 2. DISCONNECT CONTROL UNIT HARNESS CONNECTOR FROM CONTROL UNIT. 3. CONNECT ABS TESTER HARNESS TO CONTROL UNIT HARNESS CONNECTOR. 4. TURN IGNITION KEY TO ON POSITION.
2. ALTERNATOR TEST START ENGINE (ALTERNATOR TESTED BY RUNNING ENGINE)	TESTER WILL RAPIDLY DISPLAY SEVERAL MESSAGES DURING AN INITIAL SEGMENT CHECK. 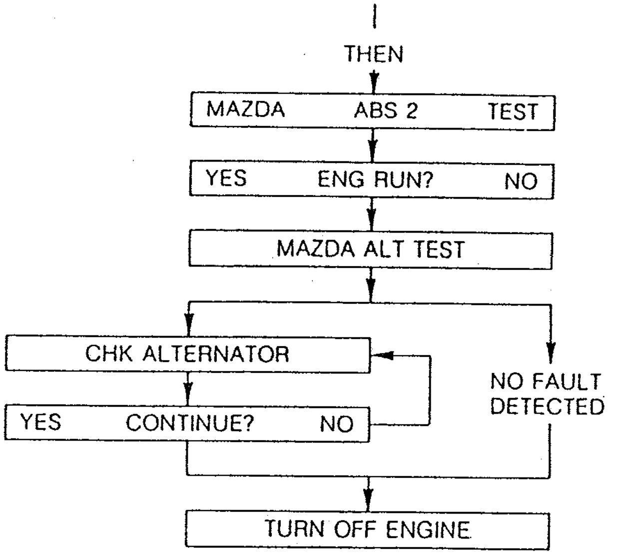
3. ABS SYSTEM TEST TURN IGNITION KEY ON (DO NOT RUN ENGINE)	TESTER WILL RAPIDLY DISPLAY SEVERAL MESSAGES DURING AN INITIAL SEGMENT CHECK. 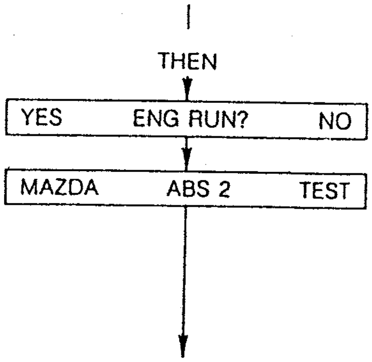 (Cont.)

97U0PX-071

4. SYSTEM VOLTAGE CHECKS

- AFTER DISPLAY INDICATES A FAULT MESSAGE, REFER TO APPLICABLE SHOP MANUAL FOR ADDITIONAL DIAGNOSTIC INFORMATION.

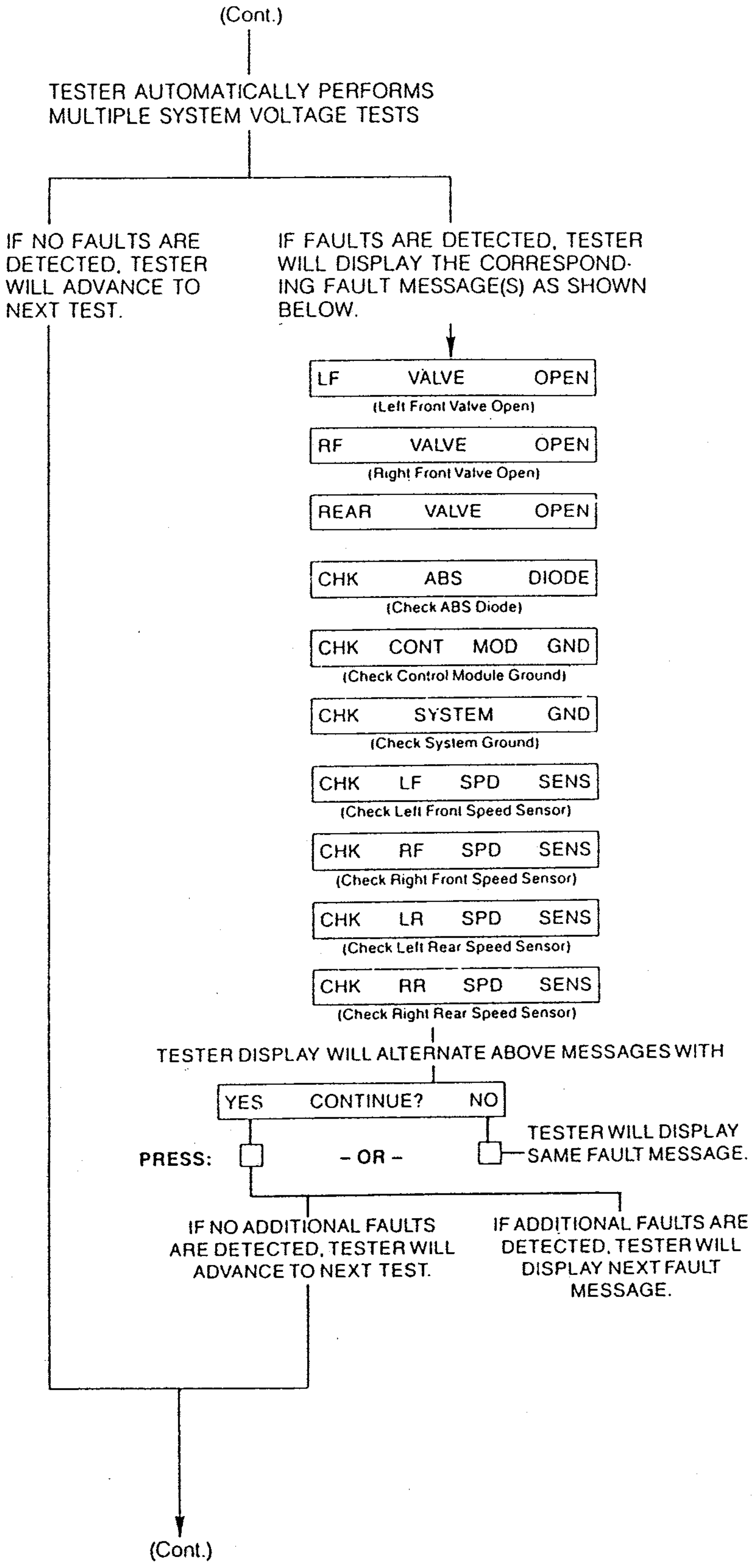

87U11X-011

5. STATIC TESTS

5A. ANTI-LOCK LIGHT TEST

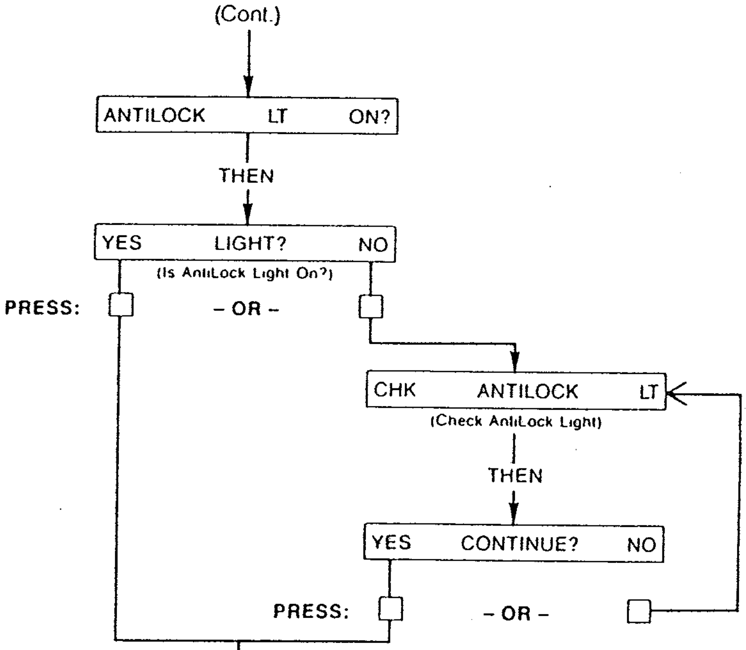

5B. BRAKE LIGHT SWITCH TEST

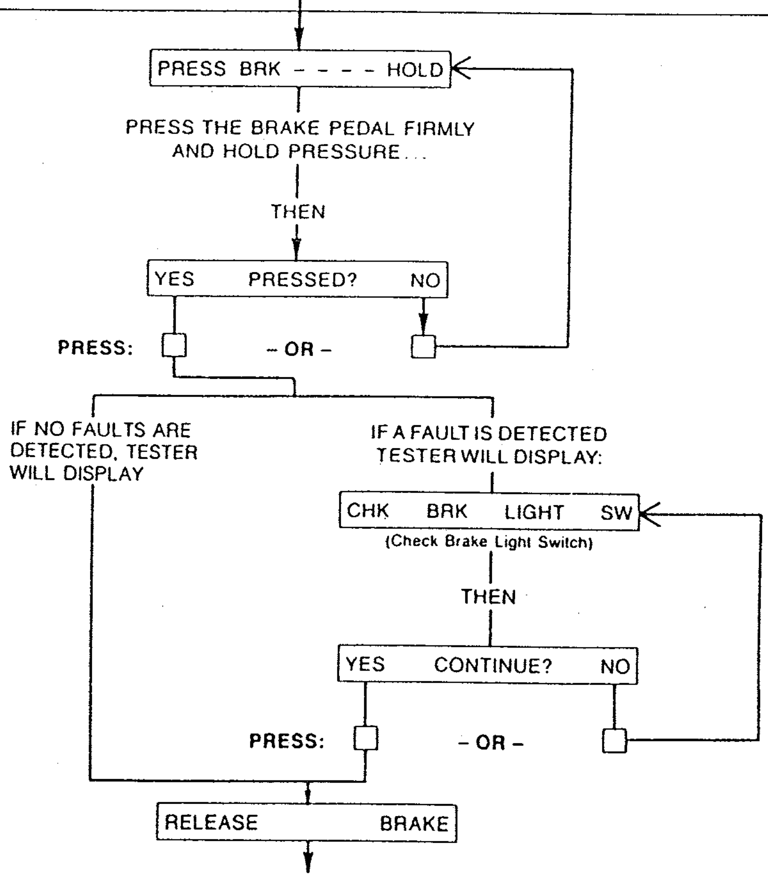

87U11X-012

5C. PUMP TEST

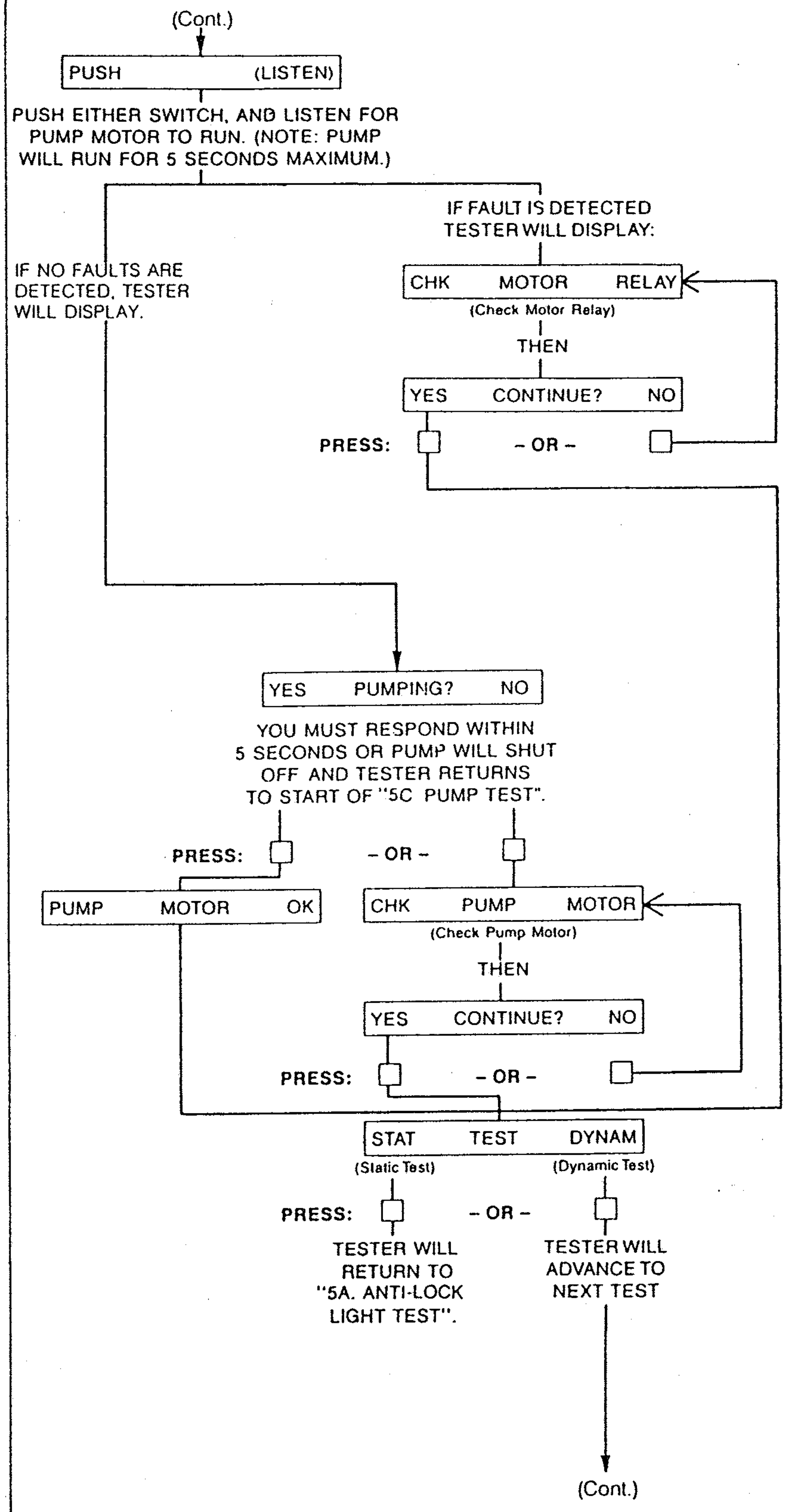

87U11X-013

6. DYNAMIC TESTS

6A. WHEEL SELECTION OR EXIT

THESE THREE MESSAGES WILL ALTERNATE ON THE DISPLAY SCREEN AT 3 1/2 SECOND INTERVALS. NOW, SELECT ONE OF THE FOUR WHEELS TO BEGIN THE DYNAMIC TEST SEQUENCE.

OR

PRESS EITHER SWITCH UNDER "PUSH TO EXIT" DISPLAY TO RETURN TO "STAT TEST DYNAM" SELECTION.

IMPORTANT:
WHEN ENTERING THE DYNAMIC TEST SEQUENCE, YOU WILL SELECT ONE OF FOUR WHEELS TO BEGIN. WHEN YOU HAVE FINISHED WITH THAT WHEEL TEST, YOU SHOULD RETURN TO 6A "WHEEL SELECTION", TO SELECT ANOTHER WHEEL, AND REPEAT THESE TEST PROCEDURES FOR ALL FOUR WHEELS.

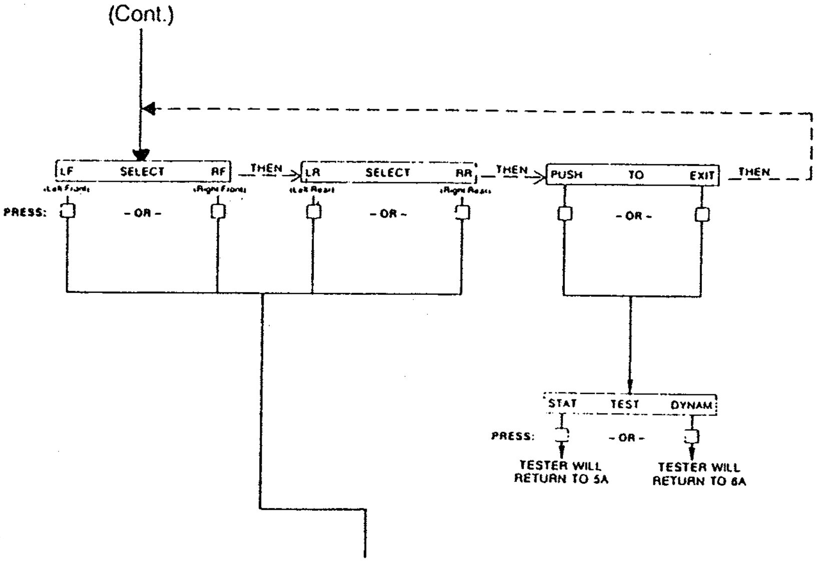

NOTE: FOR EACH OF THE WHEEL TESTS, IT IS NECESSARY TO RAISE THE WHEEL(S) BEING TESTED OFF THE FLOOR. (WHEN TESTING REAR WHEELS, BOTH WHEELS MUST BE RAISED OFF THE FLOOR.) AN ASSISTANT WILL BE REQUIRED TO SPIN THE WHEELS.

6B. WHEEL SENSOR TEST

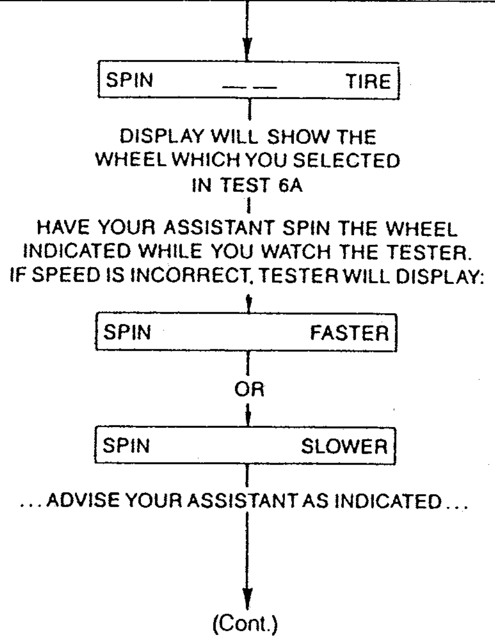

DISPLAY WILL SHOW THE WHEEL WHICH YOU SELECTED IN TEST 6A

HAVE YOUR ASSISTANT SPIN THE WHEEL INDICATED WHILE YOU WATCH THE TESTER. IF SPEED IS INCORRECT, TESTER WILL DISPLAY:

... ADVISE YOUR ASSISTANT AS INDICATED ...

87U11X-014

6B..WHEEL SENSOR TEST

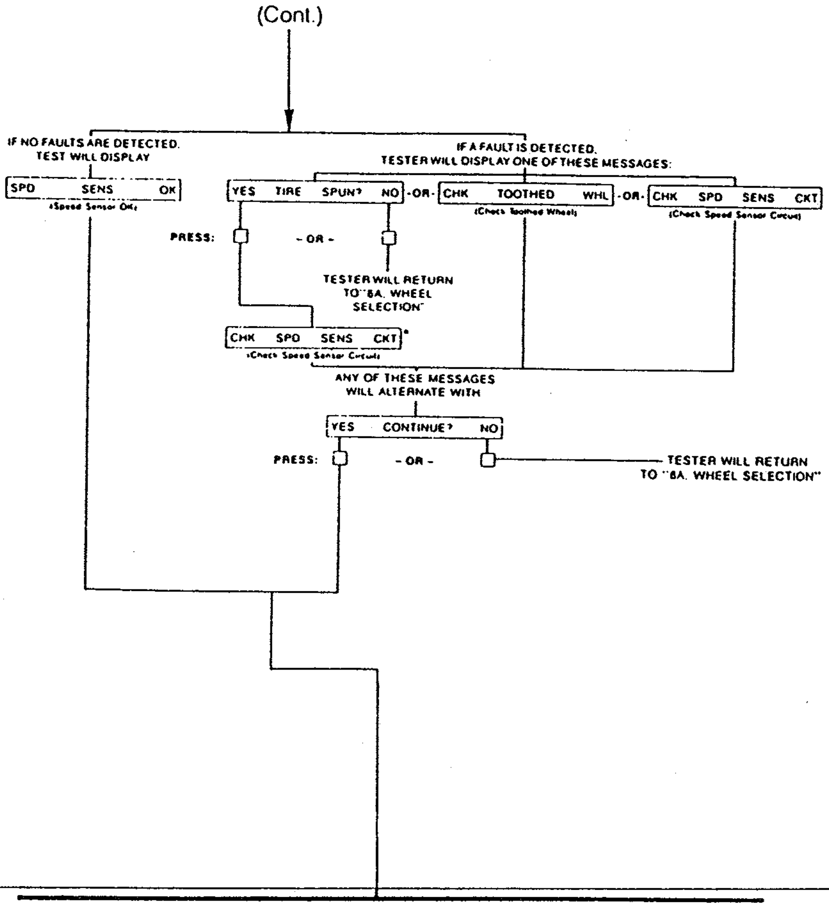

6C. SOLENOID TEST

NOTE: EACH OF THE TWO SOLENOID TESTS FOR EACH WHEEL CAN BE CONDUCTED FOR A MAXIMUM OF 15 SECONDS. IF TIME LIMIT IS EXCEEDED, TESTER WILL DISPLAY:

TIMEOUT EXPIRED

THEN

TRY TEST AGAIN

PUSH TEST 1

PUSH EITHER SWITCH TO START THIS TEST. TESTER WILL DISPLAY:

PRESS BRK... HOLD

APPLY FIRM PRESSURE TO BRAKE PEDAL, AND HOLD FIRMLY THROUGH SOLENOID TEST 1 AND TEST 2.

(Cont.)

87U11X-015

6C. SOLENOID TEST

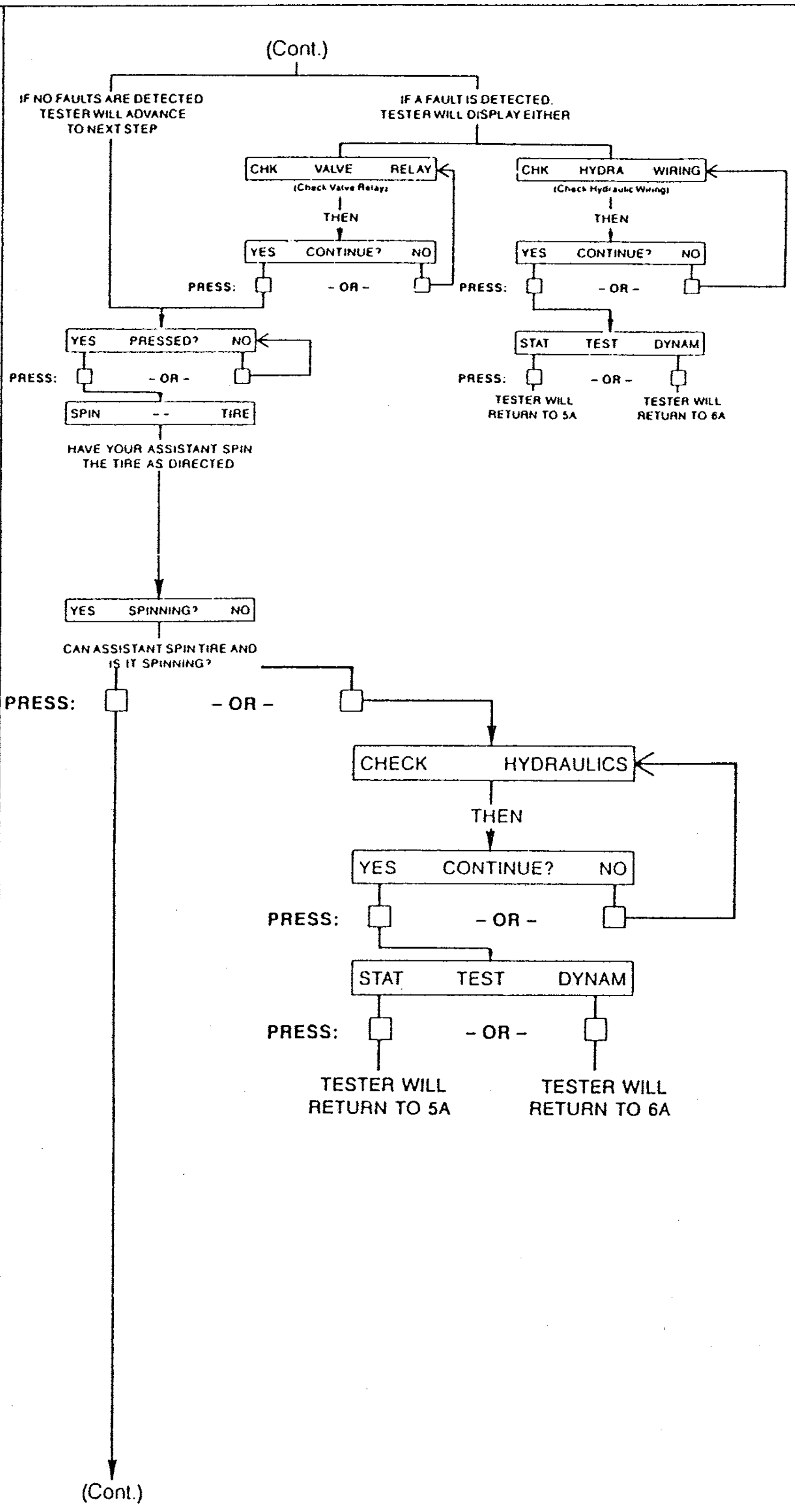

87U11X-016

6C. SOLENOID TEST

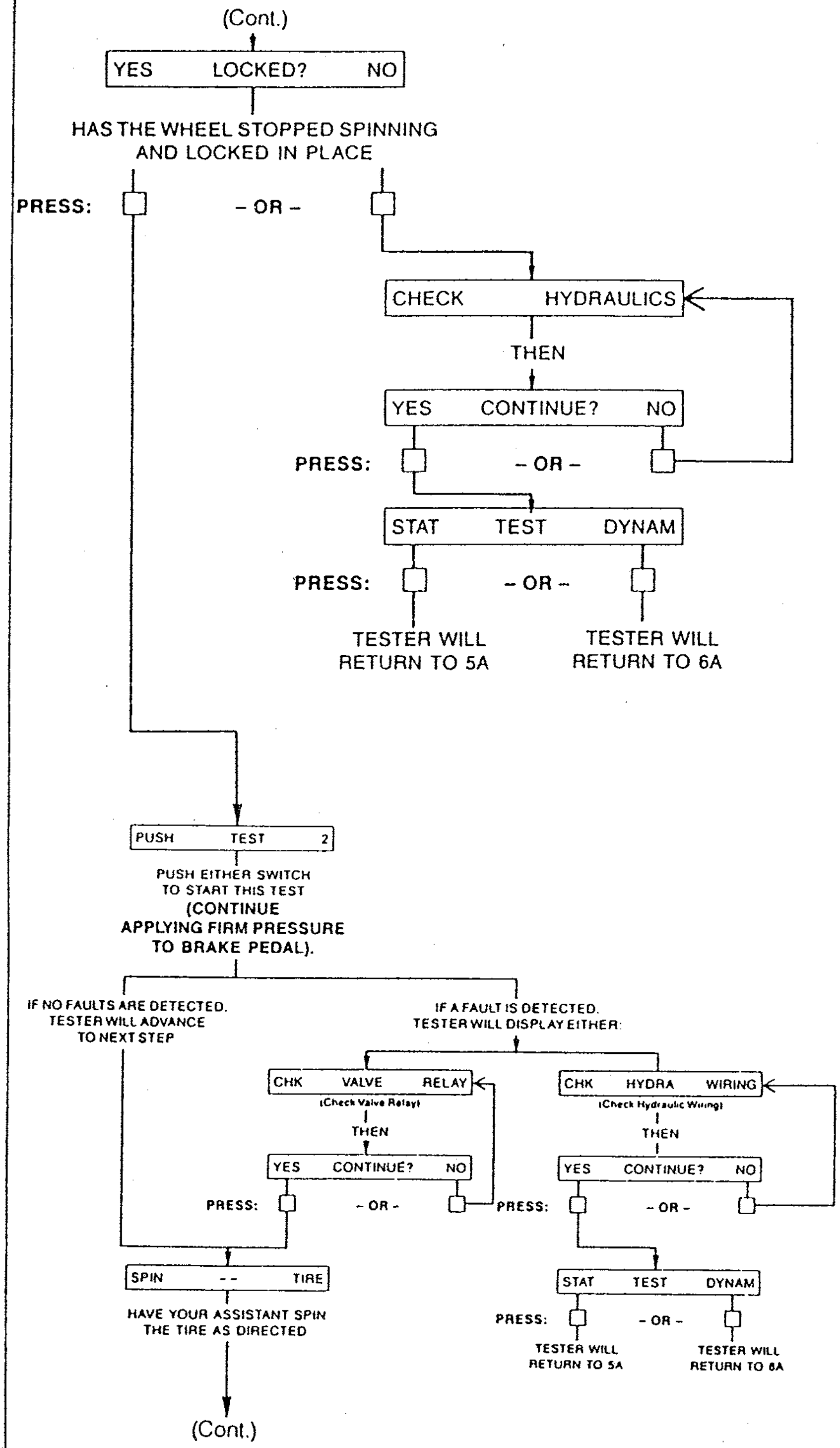

87U11X-017

6C. SOLENOID TEST

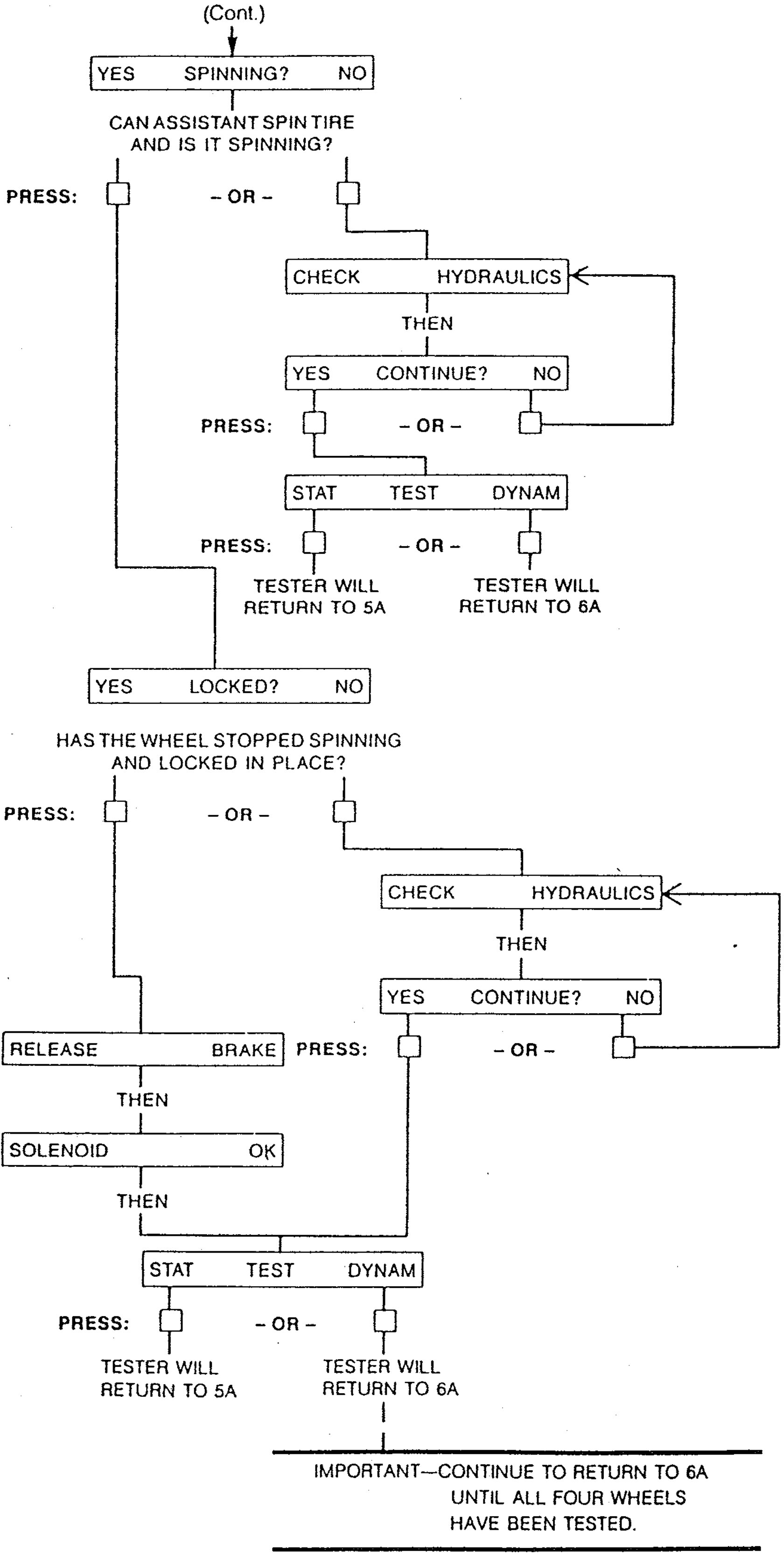

87U11X-018

WHEELS AND TIRES

OUTLINE

OUTLINE OF CONSTRUCTION

- Tires that match the vehicle's characteristics are used to improve driving stability and increase marketability.

FEATURES

Increased driving stability	Asymmetric (crosswise), unidirectional tires (R1)	Q–3
	Unidirectional tires (BASE, TOURING)	

37U0QX-502

SPECIFICATIONS

Item			Specifications
Standard tire			
Tires	Size		P225/50R16 91V P225/50 ZR 16
	Air pressure	kPa {kgf/cm², psi}	220 {2.2, 32}
Wheels	Size		16 × 8JJ
	Material		Aluminum alloy
	Offset	mm {in}	50 {1.97}
	Pitch circle diameter	mm {in}	114.3 {4.50}
Temporary spare tire			
Tires	Size		T135/70D16
	Air pressure	kPa {kgf/cm²,psi}	415 {4.2, 60}
Wheels	Size		16 × 4T
	Material		Aluminum alloy
	Offset	mm {in}	40 {1.57}
	Pitch circle diameter	mm {in}	114.3 {4.50}

37U0QX-503

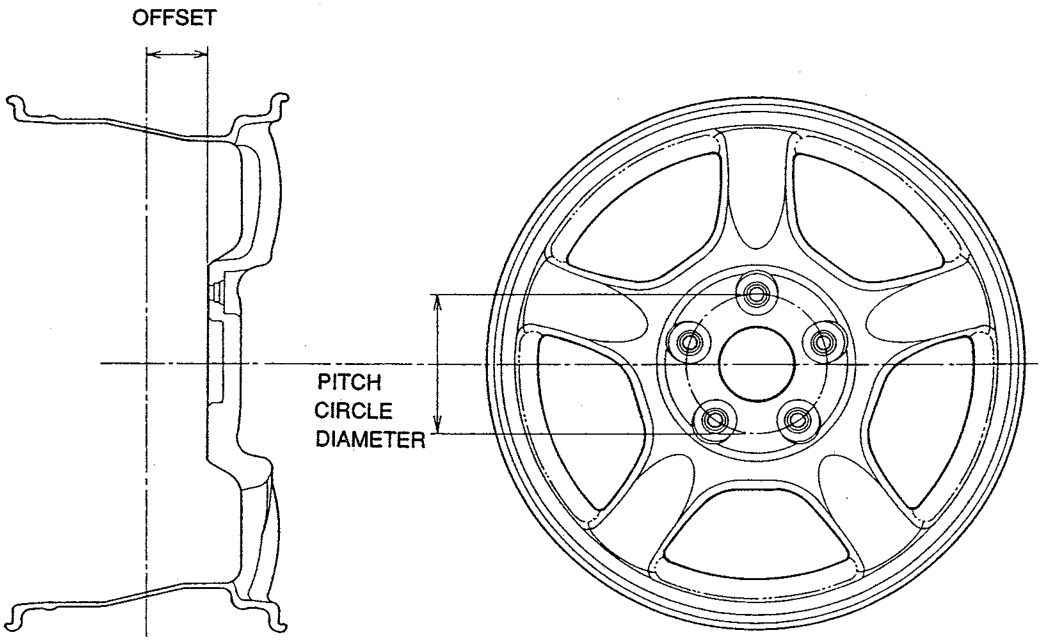

TIRE

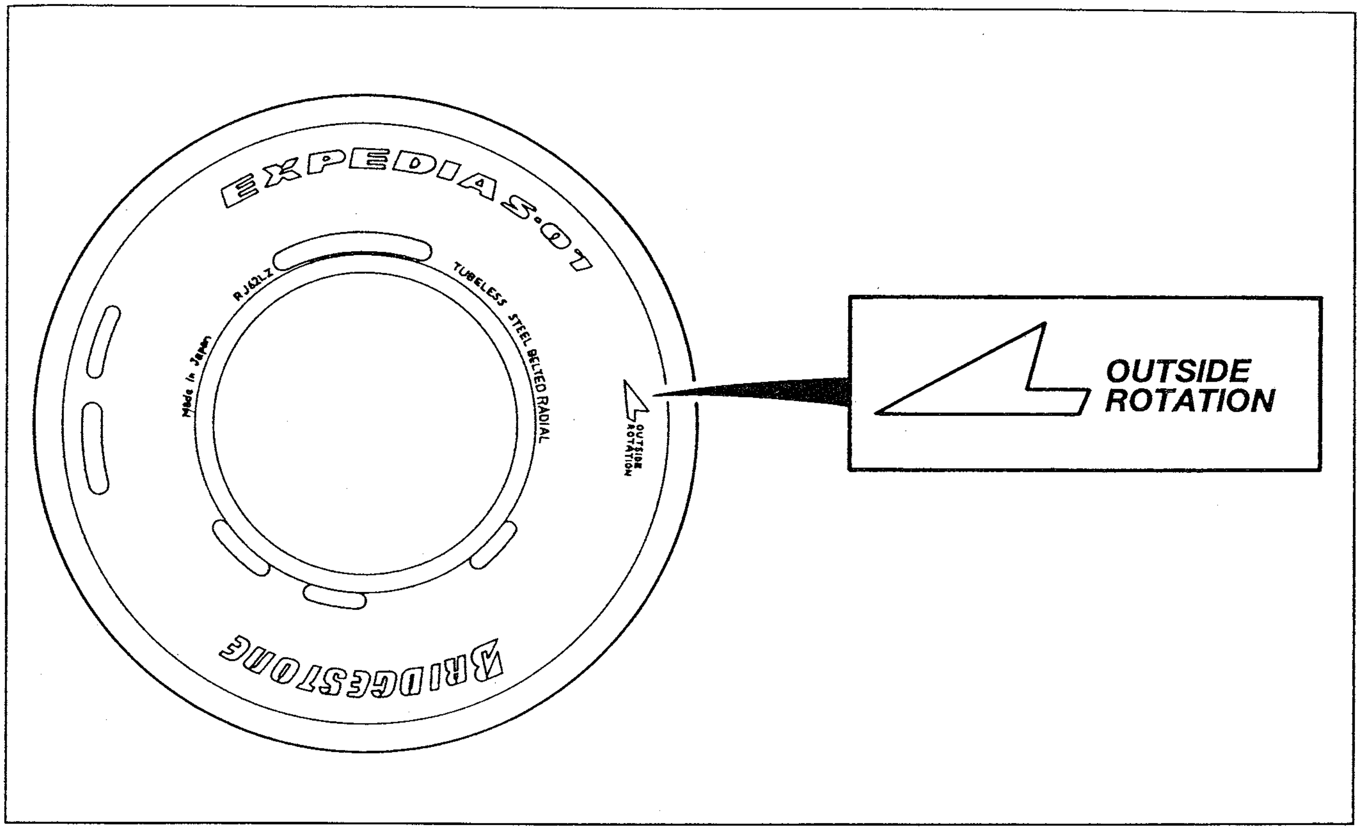

37U0QX-504

- R1 vehicles use asymmetric (crosswise), unidirectional tires.

Caution

- **When mounting the tires, match the rotation mark with the direction of tire rotation and attach the tires so that the OUTSIDE mark faces away from the vehicle.**

- BASE and TOURING vehicles use unidirectional tires.

SUSPENSION

37U0RX-501

OUTLINE

- Double-wishbone front suspension is used. Aluminum-alloy A-upper arms and L-lower arms reduce unsprung mass to improve suspension grounding.
- Double-wishbone rear suspension that contains an aluminum-alloy Y-upper arm and a lower arm equipped with toe-control links is used. The lower arm consists of an I-arm and trailing link.

37U0RX-502

FEATURES

Reduced unsprung mass
- Aluminum-alloy suspension arms and links

Improved driving stability

Improved driving comfort
- Sliding front upper arm bushing .... R– 6
- Sliding bushing in front and liquid-filled bushing in back of front lower arm .. R– 7
- Sliding front damper bushing .... R– 8
- Shock-isolating mounting rubber in front shock absorber and spring .... R– 8
- Front stabilizer control link with pillow ball .... R– 9
- Front strut bar in R1 vehicles R–10
- Sliding rear upper arm bushing R–14
- Pillow ball in the I-arm side of the rear lower arm R–15
- Toe control link with pillow ball R–16
- Sliding rear damper bushing R–17
- Shock-isolating mounting rubber in rear shock absorber and spring R–17
- Resinous rear stabilizer control link R–18
- Rear stabilizer control link with ball joint R–18
- Rear strut bar R–19

37U0RX-053

STRUCTURAL VIEW

FRONT SUSPENSION

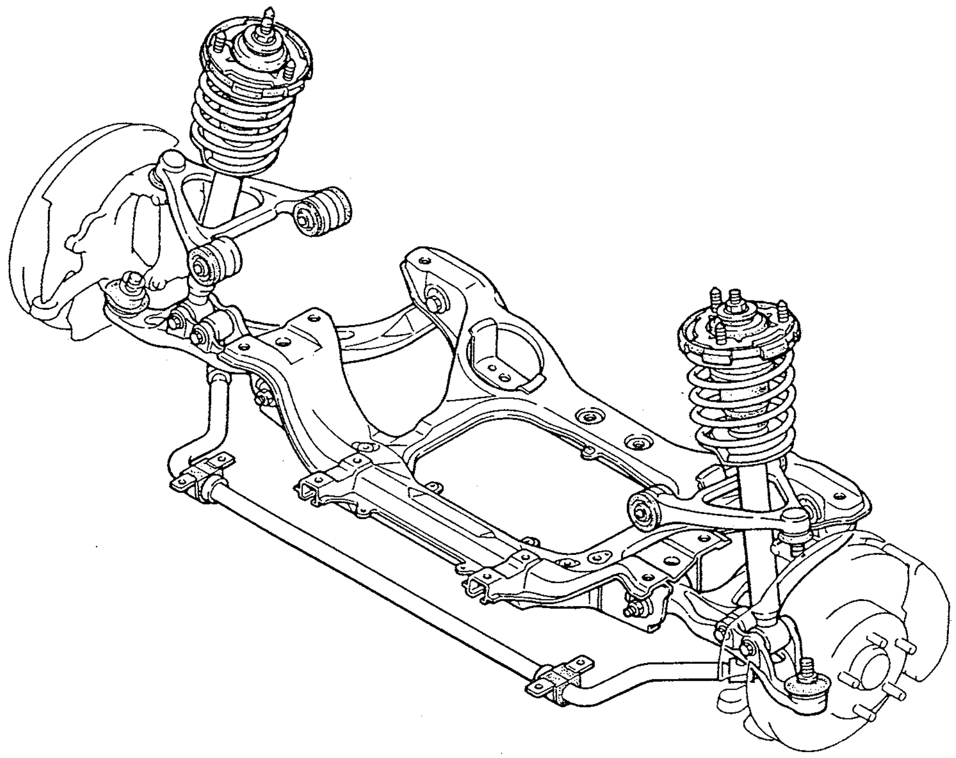

REAR SUSPENSION

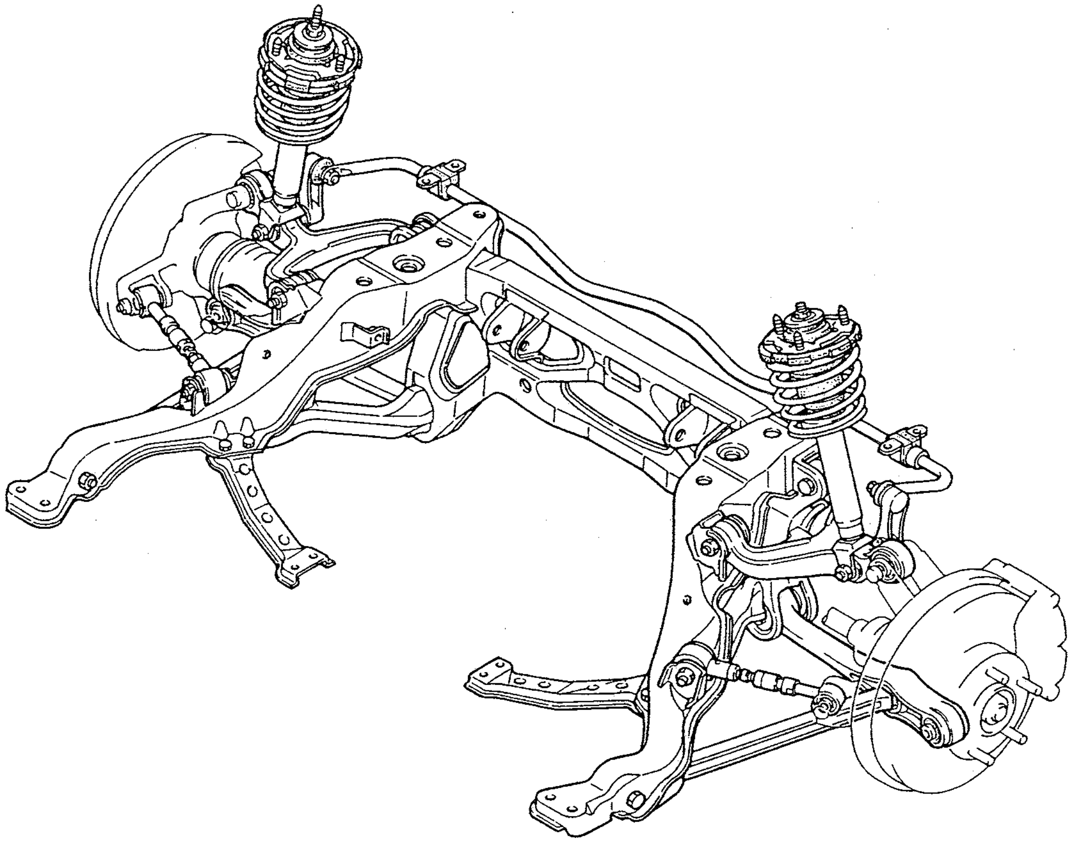

37U0RX-504

SUSPENSION BUSHINGS

FRONT

- ○ BALL JOINT
- ◎ SLIDE BUSHING
- ⊕ LIQUID-FILLED BUSHING

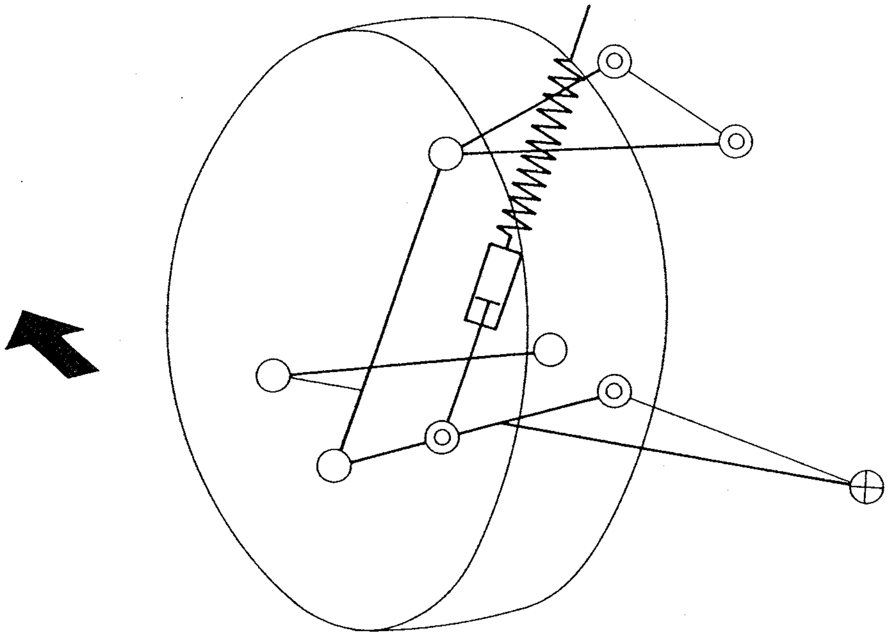

REAR

- ◎ SLIDE BUSHING
- ● RUBBER BUSHING
- △ PILLOW BUSHING
- ⊗ PILLOW BALL

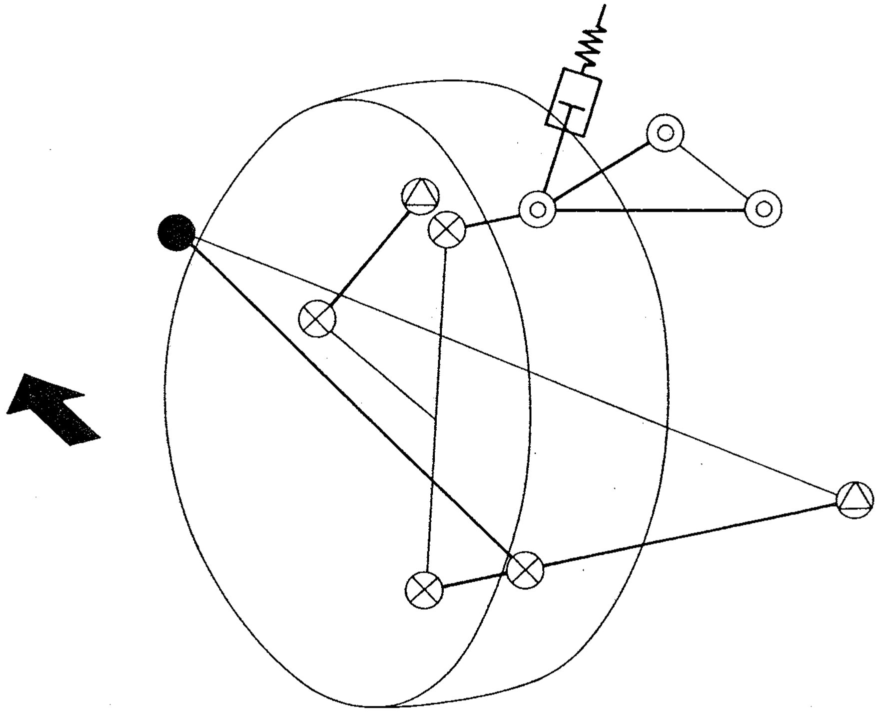

37U0RX-505

SPECIFICATIONS

Item		Grade	BASE, TOURING	R1
Front suspension				
Suspension type			Double–wishbone	
Coil spring	Identification mark color		Blue	
	Wire diameter mm {in}		12.4 {0.49}	
	Coil center diameter mm {in}		104.9 {4.130}	
	Free length mm {in}		272.9 {10.74}	
	Active coil number		4.27	
Shock absorber type			Cylindrical, double-acting, low-pressure gas-charged	
Stabilizer	Type		Torsion bar, hollow	
	Diameter mm {in}		28.6 {1.13}	
Front wheel Alignment (Unladen[*1])	Total toe-in mm {in}		1 ± 3 {0.04 ± 0.11}	
	Toe-in (per side) degree		0°03' ± 08'[*3]	
	Maximum steering angle degree	Inner	36° ± 2°	
		Outer	32° ± 2°	
	Camber angle[*2] degree		0°05' ± 45'	
	Caster angle[*2] degree		6°05' ± 1°	
	Kingpin angle degree		13°55'	
Rear suspension				
Suspension type			Double-wishbone	
Coil spring	Identification mark color		White	
	Wire diameter mm {in}		12.2 {0.48}	
	Coil center diameter mm {in}		114.7 {4.516}	
	Free length mm {in}		299.0 {11.77}	
	Active coil number		4.21	
Shock absorber type			Cylindrical, double-acting, low-pressure gas-charged	
Stabilizer	Type		Torsion bar, hollow	
	Diameter mm {in}		17.3 {0.68}	
Rear wheel alignment (Unladen[*1])	Total toe-in mm {in}		2 ± 3 {0.08 ± 0.11}	
	Toe-in (per side) degree		0°05' ± 08'[*3]	
	Camber angle[*2] degree		−1°13' ± 45'	
	Thrust angle degree		0° ± 06'[*3]	

37U0RX-506

[*1] Fuel tank full; radiator coolant and engine oil at specified levels; spare tire, jack, and tools in designated positions.

[*2] Difference between left and right must not exceed 1°.

[*3] Indicates measurements made by using the 4-wheel alignment tester.

FRONT SUSPENSION

STRUCTURE

Upper Arm

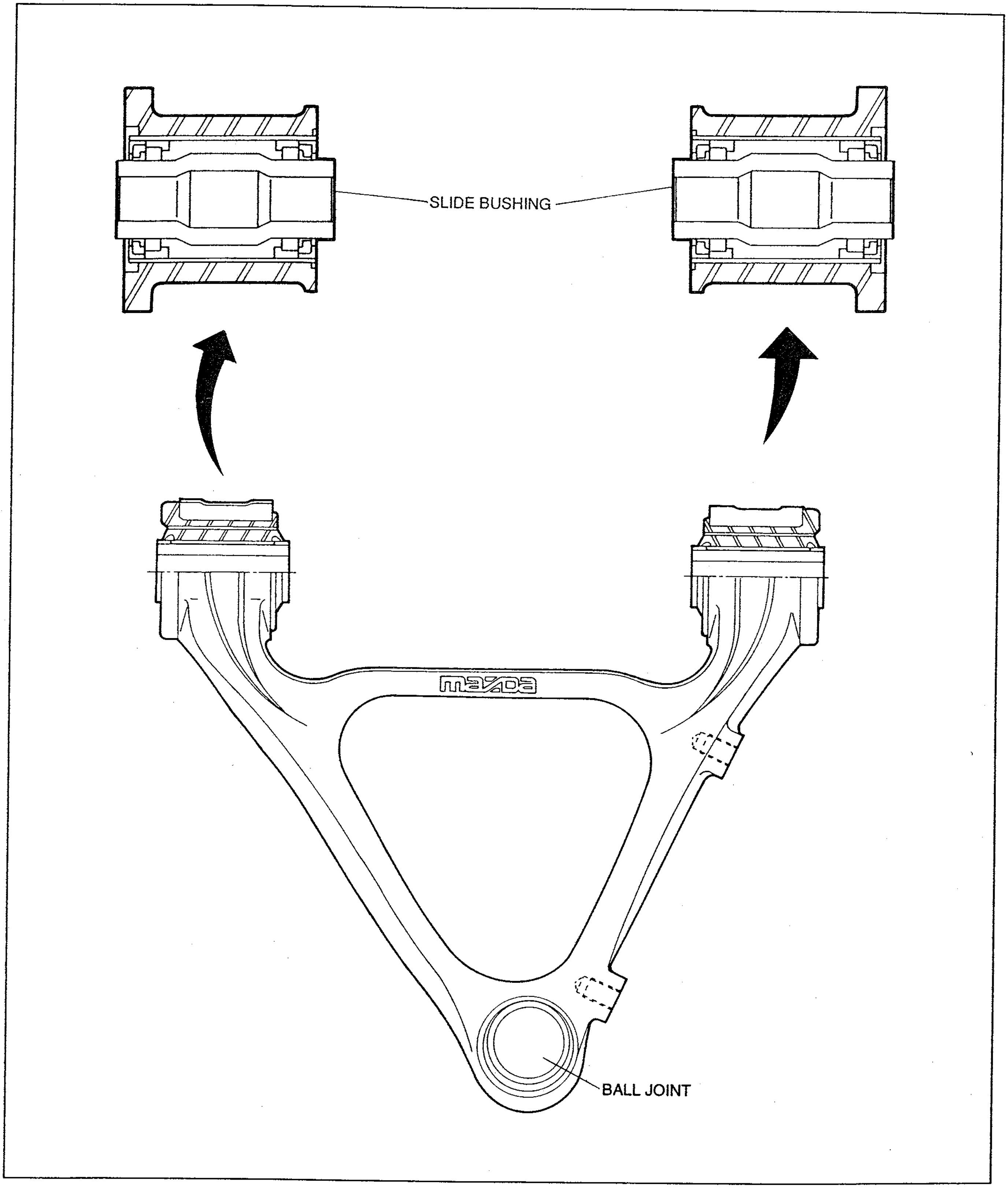

37U0RX-507

- The aluminum-alloy upper arm reduces unsprung mass.
- Sliding (free-rotation) upper arm bushings provide high camber and lateral rigidity with smooth arm movement.

Lower Arm

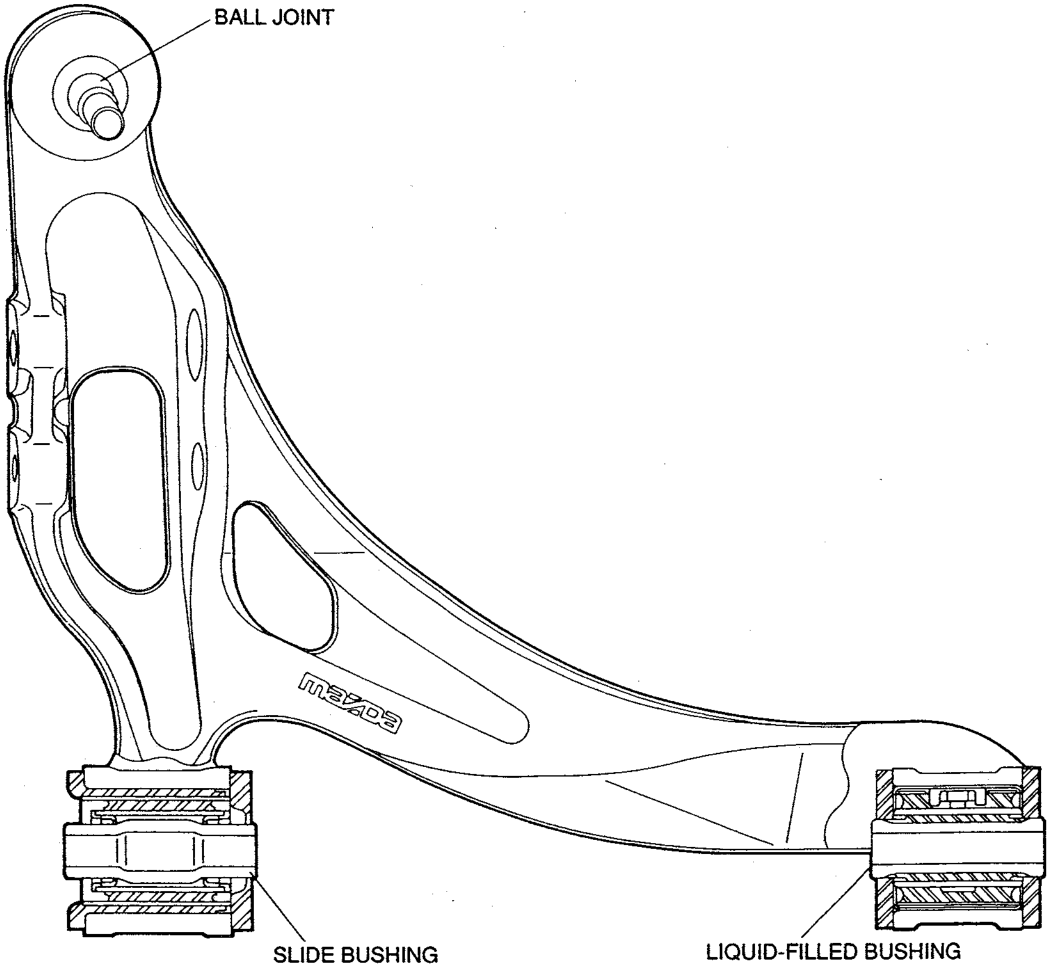

37U0RX-508

- Like the upper arm, the lower arm is made of aluminum alloy to reduce unsprung mass.
- Liquid-filled lower arm bushings reduce vibration and noise.
- Like the upper arm bushings, slide bushings are placed at the front portion of the lower arm to provide high camber and lateral rigidity with smooth arm movement.
- The front caster and camber can be adjusted by turning the adjusting cam bolts. (Refer to Workshop Manual.)

Shock Absorber and Spring

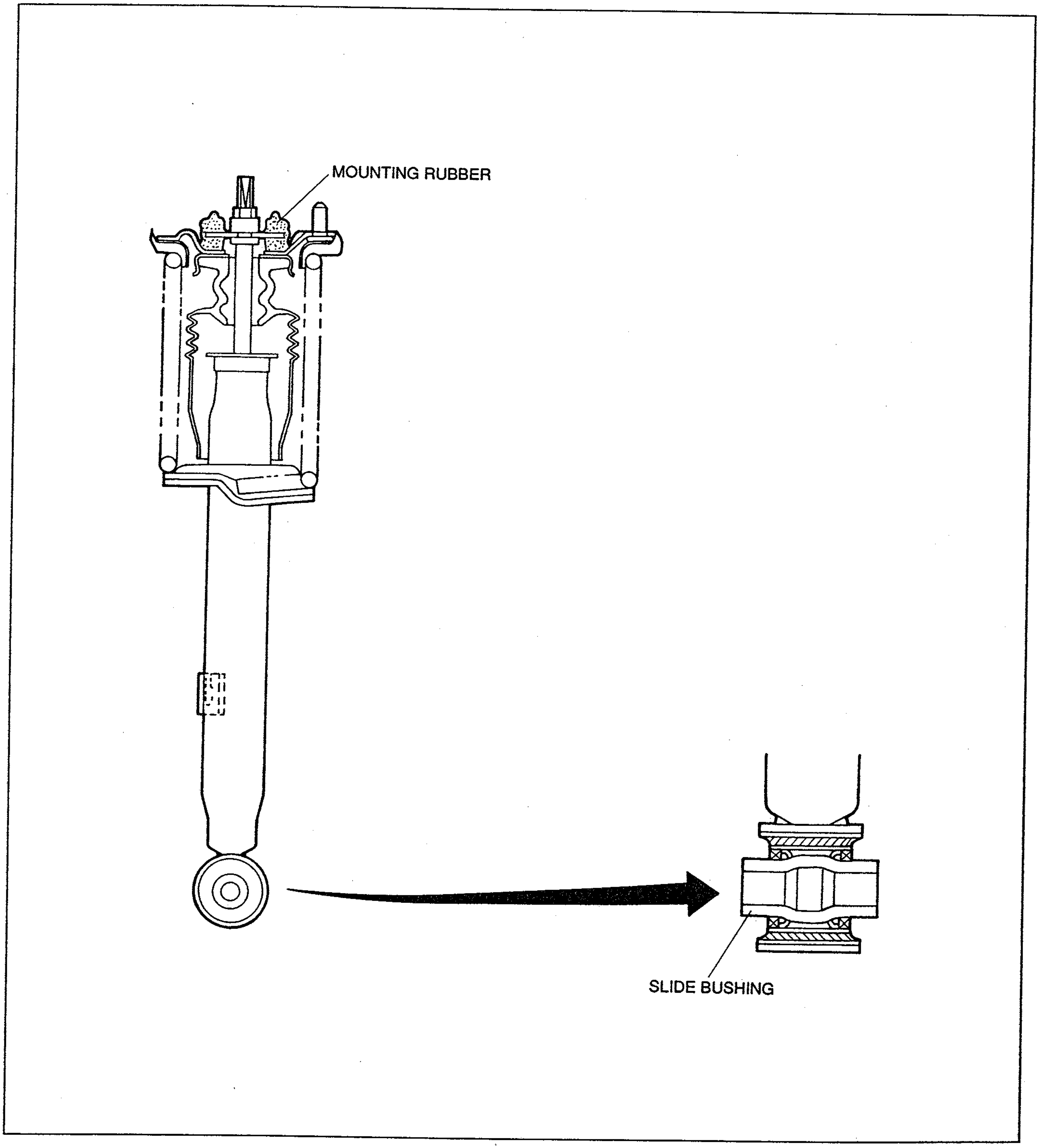

- A coil spring and low-pressure gas-charged shock absorber with double-acting cylinder were adopted. The low-pressure gas-charged shock absorber produces stable damping force without cavitation.
- The size and type of the coil spring and shock absorber vary depending on the characteristics of each model.
- Slide bushings have been adopted to slide the shock absorber smoothly.
- Shock absorbers tuned even to the lowest speed range are utilized.
- The mounting rubber absorbs shocks from the piston rods and springs separately to stifle road noise and reduce thrust shock.

Front Stabilizer

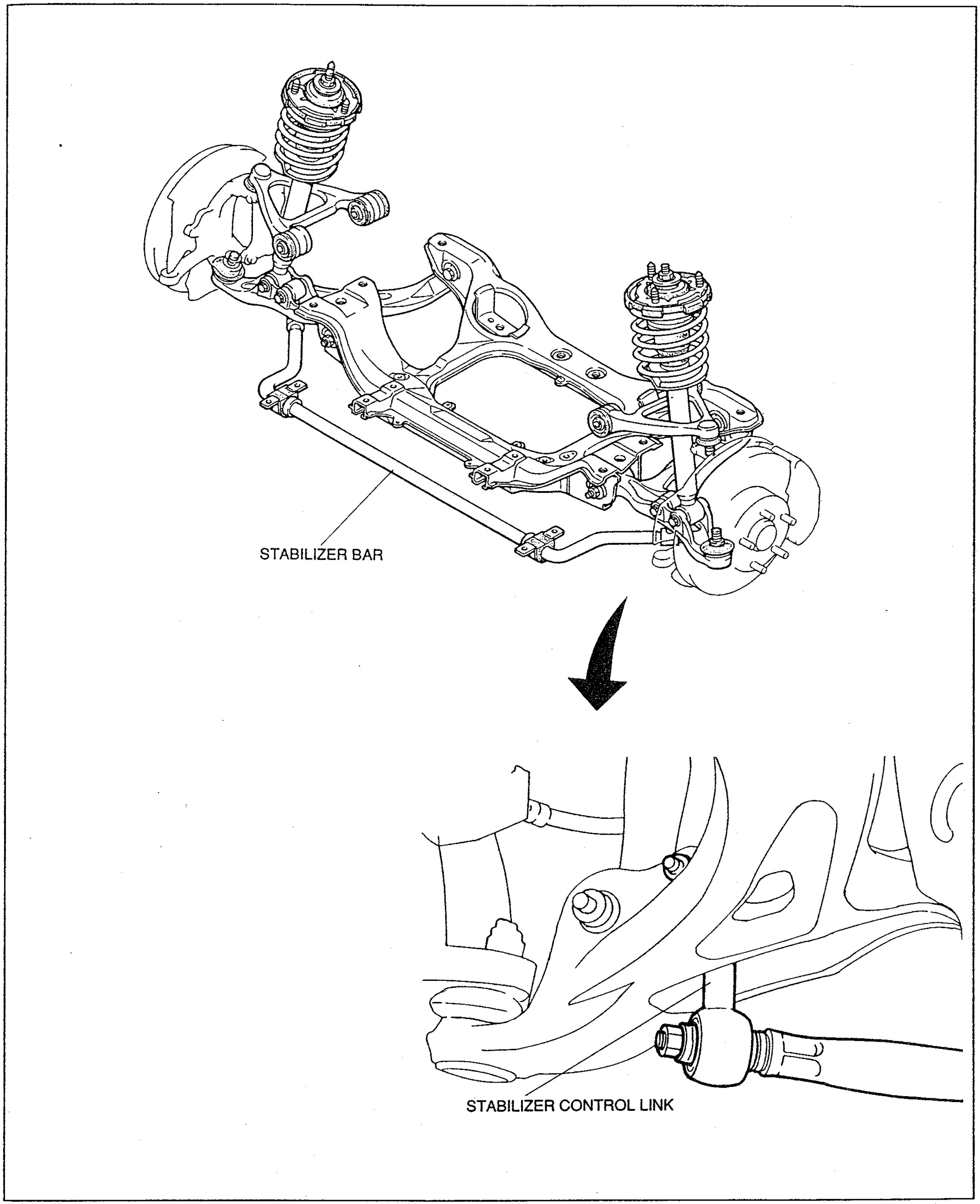

37U0RX-510

- A hollow torsion stabilizer bar has been adopted.
- The stabilizer bar is connected to lower arm with a control link.
- The control link passes through and connects the lower arm at a position giving good link efficiency.
- A high-rigidity pillow ball produces linear, smooth control.

Front Strut Bar

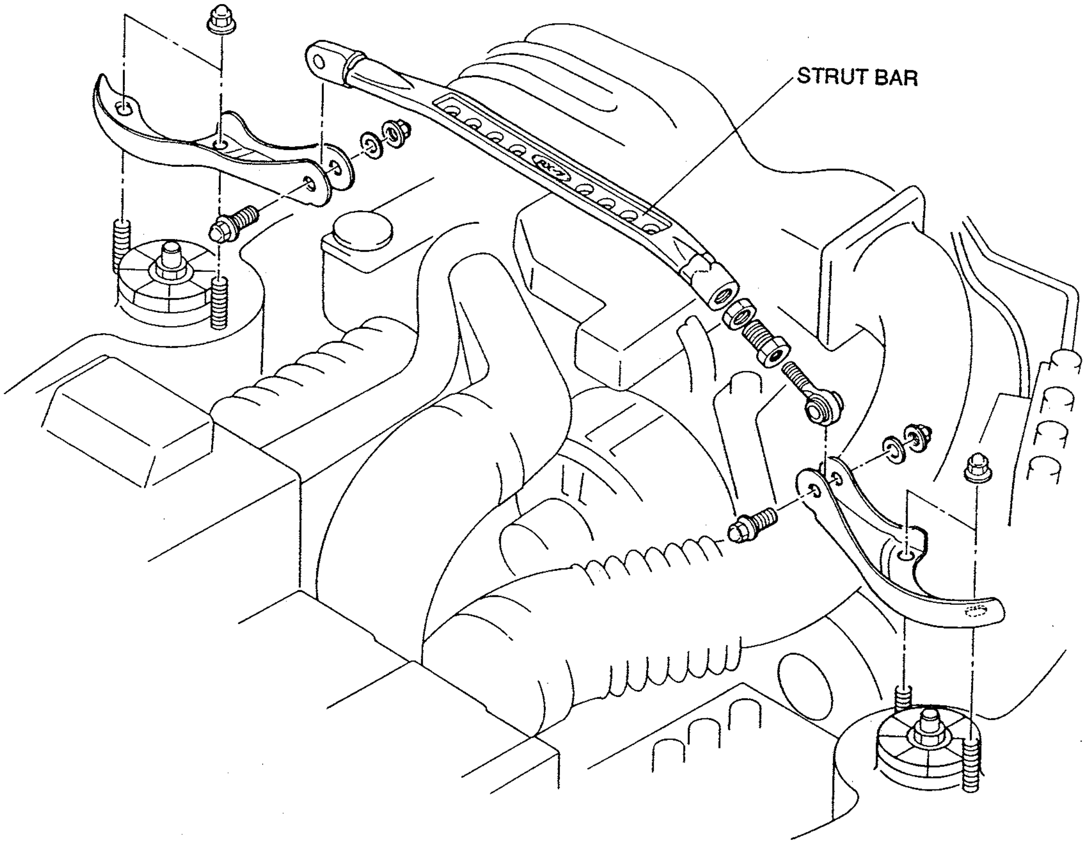

37U0RX-511

- A strut bar is used in R1 vehicles to improve driving stability and merchantability.

Suspension Member

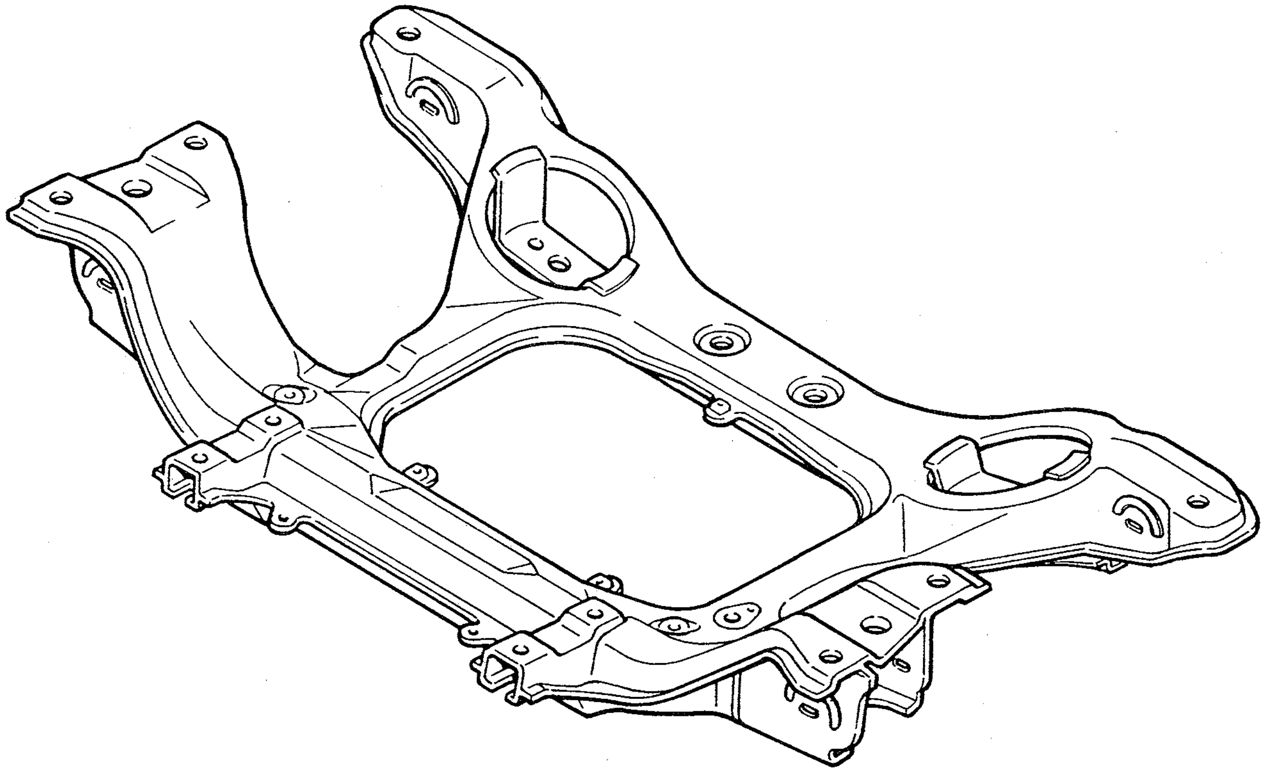

37U0RX-512

- An efficient layout that harmonizes with the vehicle frame improves rigidity and reduces weight.

TOE CONTROL OPERATION

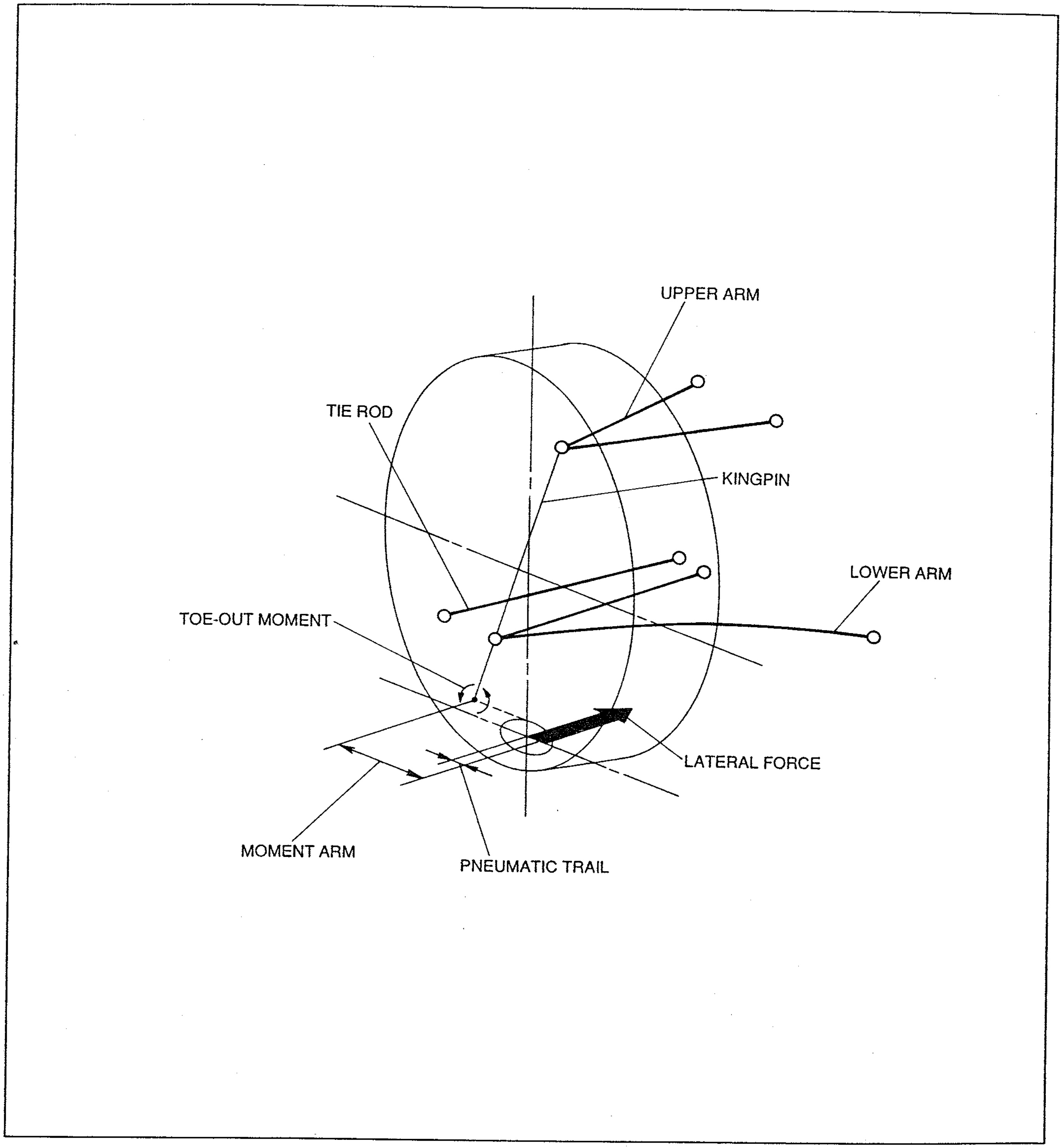

37U0RX-513

Cornering-generated lateral forces

- Lateral forces forme at a position slightly to the rear of the central point of contact between the tire and ground. This distance from the central point is called pneumatic trail. The kingpin, which is formed by the upper and lower arms, is forward of the point of lateral force. The lateral force created at the tire thus generates toe-out moment around the kingpin. An appropriate toe-out (roll steering) is generated by cornering roll after tuning the length and position of arm.
  The lateral force is also transmitted from the upper and lower arms to the tie rod.
  In the new RX-7, desirable toe-in steering is produced by optimizing suspension rigidity and deflection characteristics of the arm bushings. This alleviates the toe-out generated when cornering, thus adding stability for sharp driving performance.

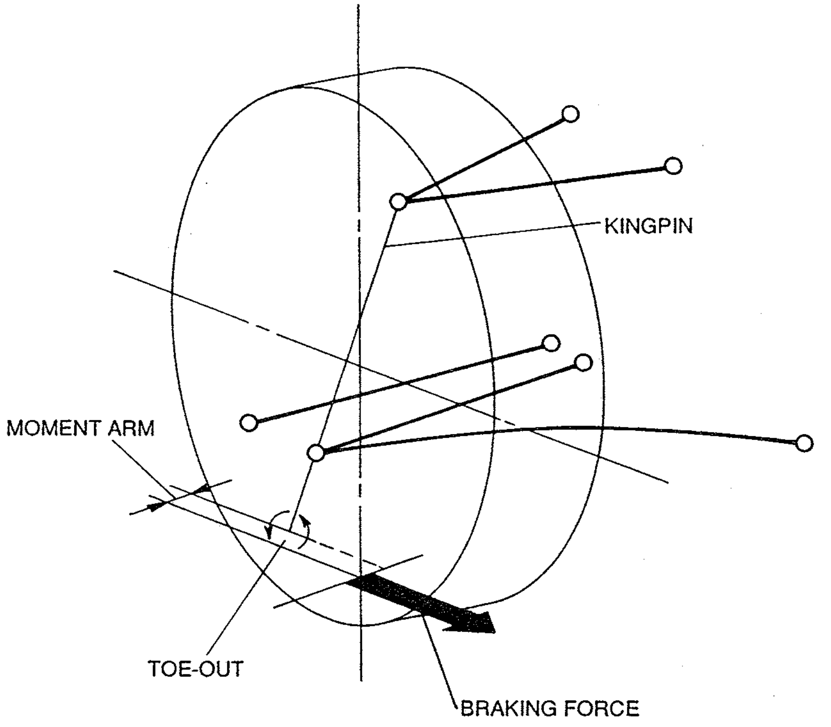

37U0RX-514

Braking force (foot brake)

- Rearward braking force forms at the tire-and-ground contact point. In the new RX-7, toe-out moment is generated during braking by setting the kingpin inside from the braking force.
  The arm layout is appropriately designed so that during sudden braking with nose-dive, further toe-out moment is generated. This ensures reliable stability during braking.

REAR SUSPENSION

STRUCTURE

Upper Arm

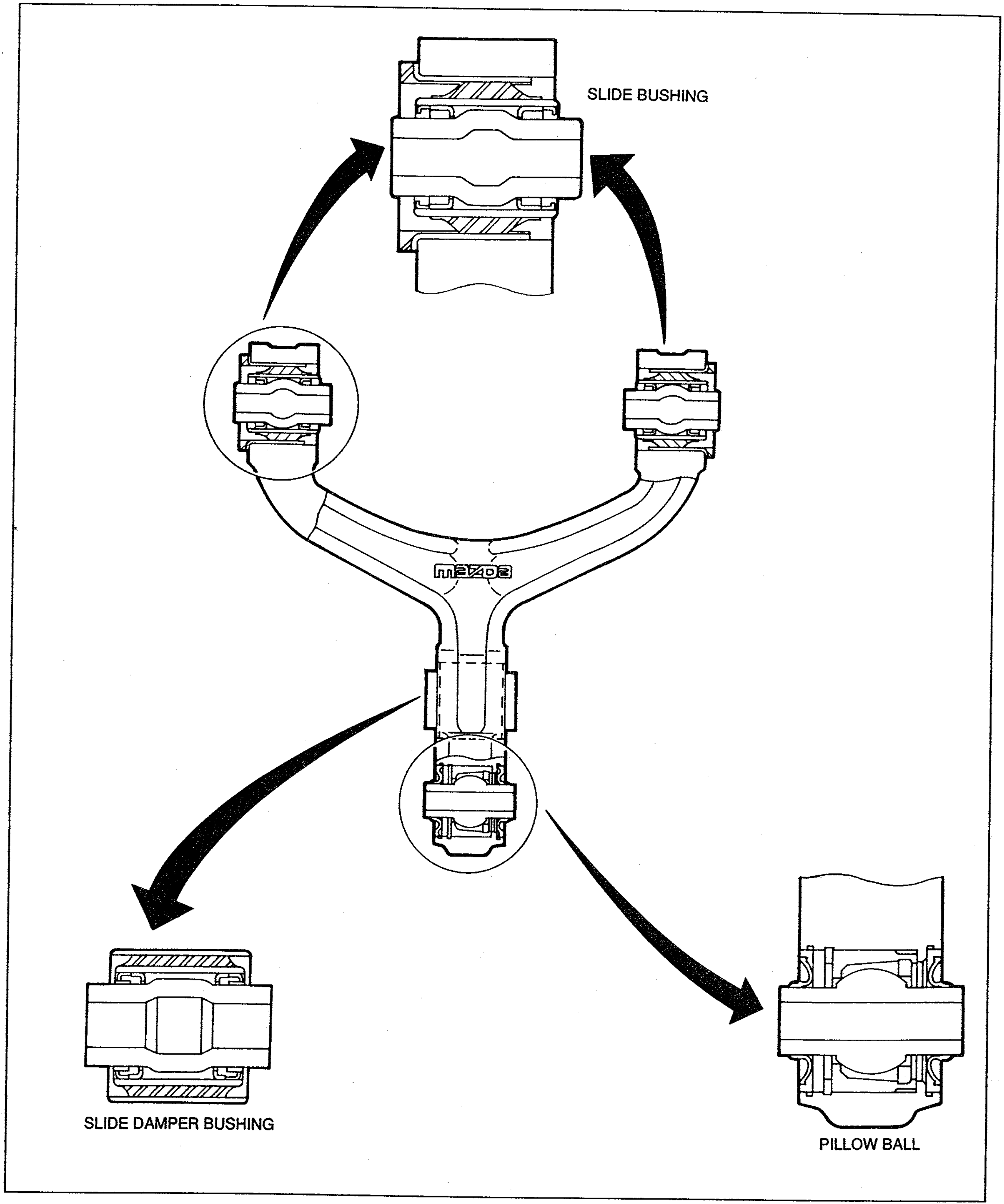

- An aluminum-alloy, Y-upper arm reduces unsprung mass.
- Slide upper arm bushings give high camber rigidity and lateral rigidity with smooth arm movement.

Lower Arm

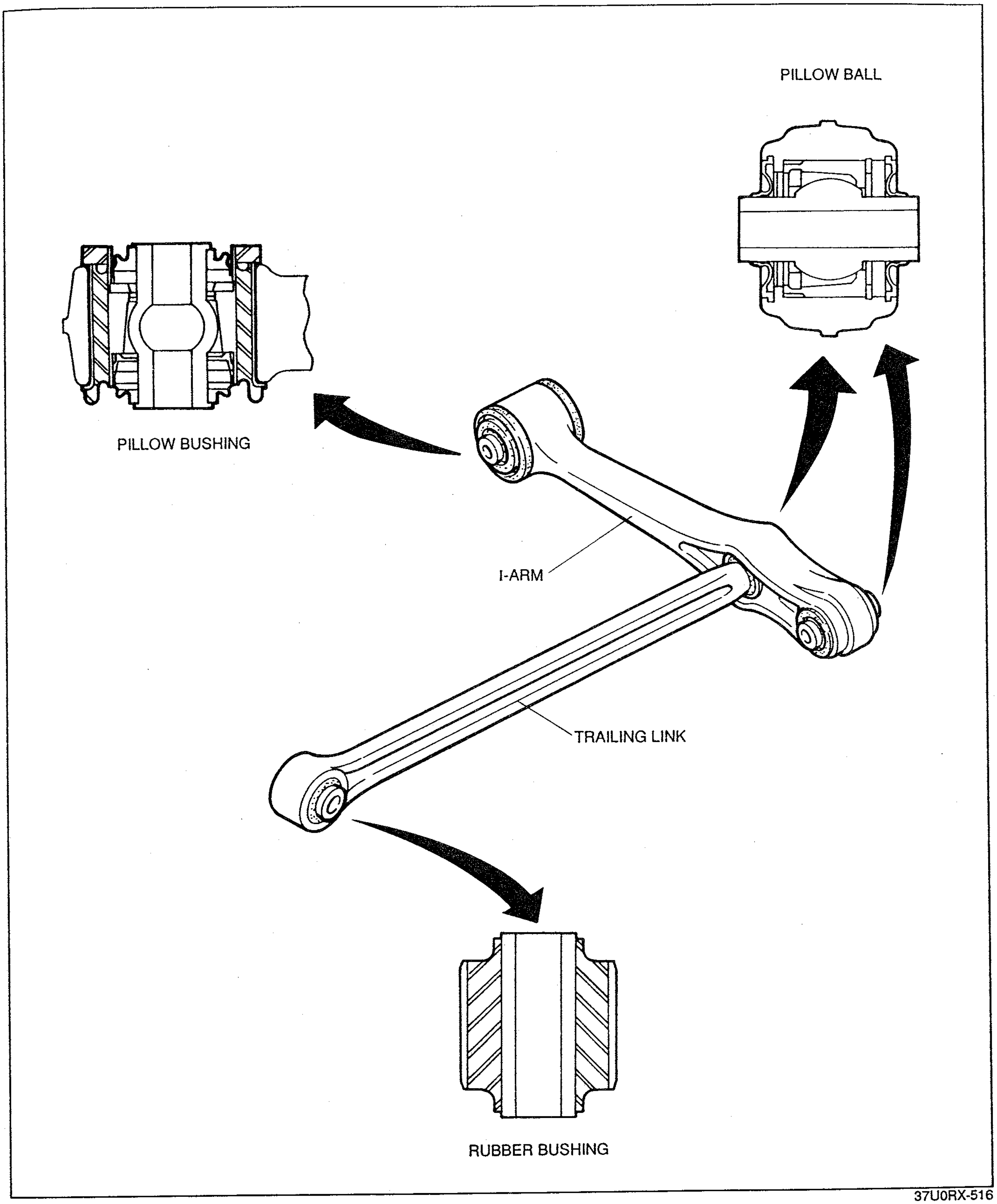

- The lower arm comprises an I-arm and trailing link.
- The I-arms have pillow bushings on the members and pillow balls on the hub.
- The trailing links have pillow balls on the I-arms and rubber bushings on the members, thus optimizing compliance with driving and braking forces to improve vehicle grounding and drive comfort.

Toe-control Link

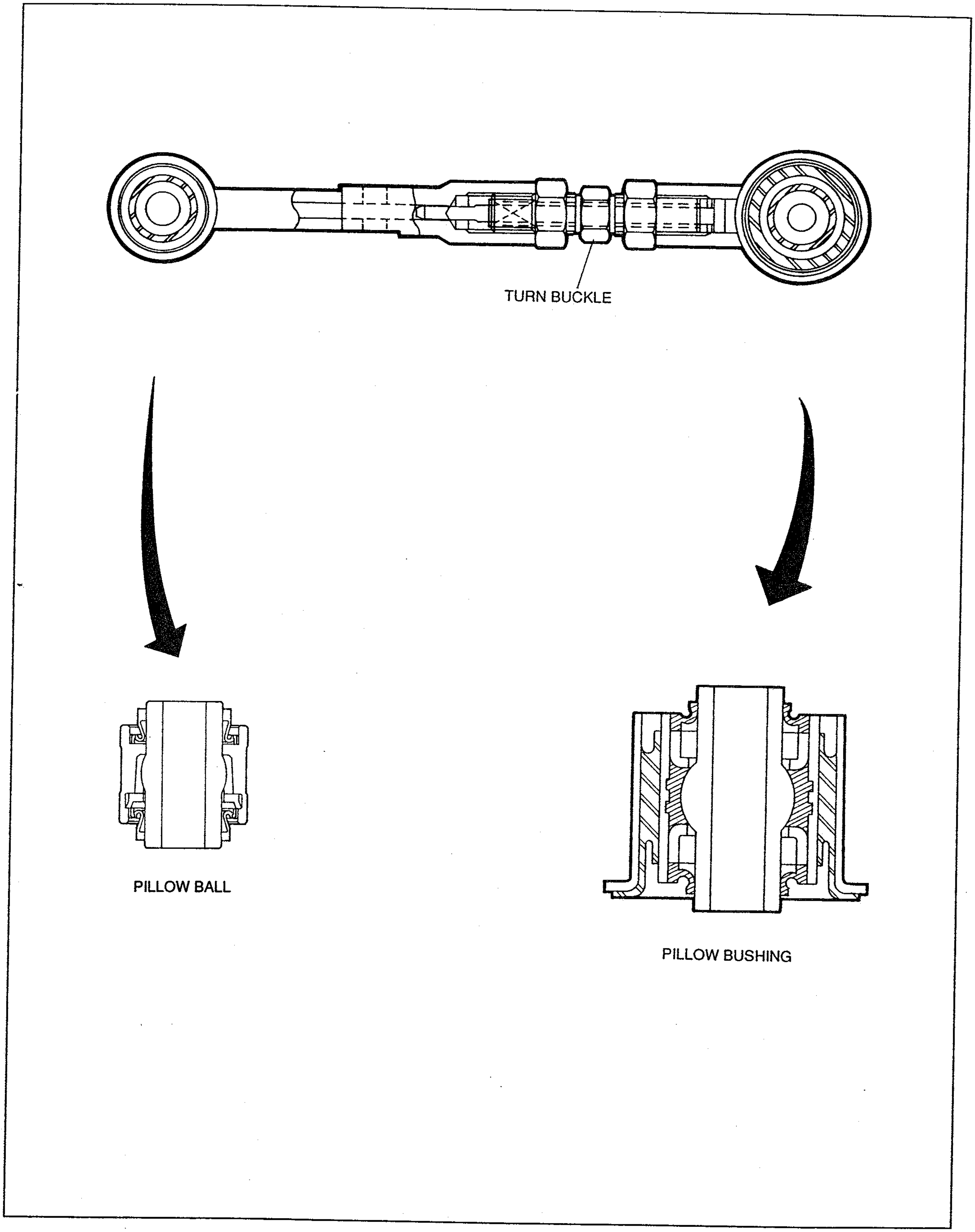

37U0RX-517

- Pillow bushings and pillow balls add high lateral rigidity and toe rigidity with smooth arm movement.
- The rear toe-in can be adjusted by rotating the turnbuckle.

Rear Shock Absorber and Spring

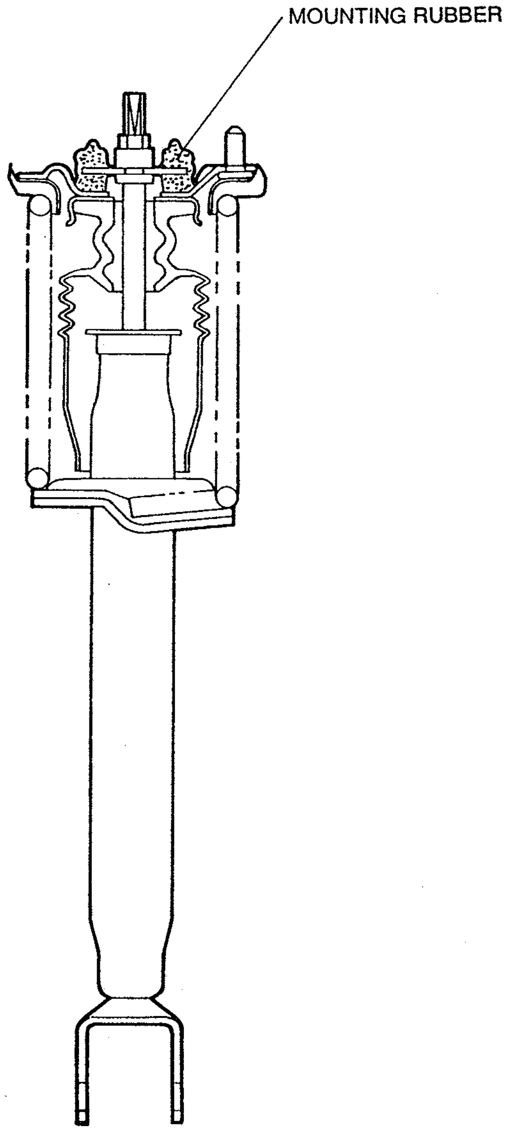

37U0RX-518

- As in the front, coil spring and low pressure gas-charged shock absorbers with double-acting cylinders are used.
- Slide damper bushings are also used.
- The shock absorbers are tuned even to the lowest speed range.
- The mounting rubber absorbs shocks from the piston rods and springs separately.

Rear Stabilizer

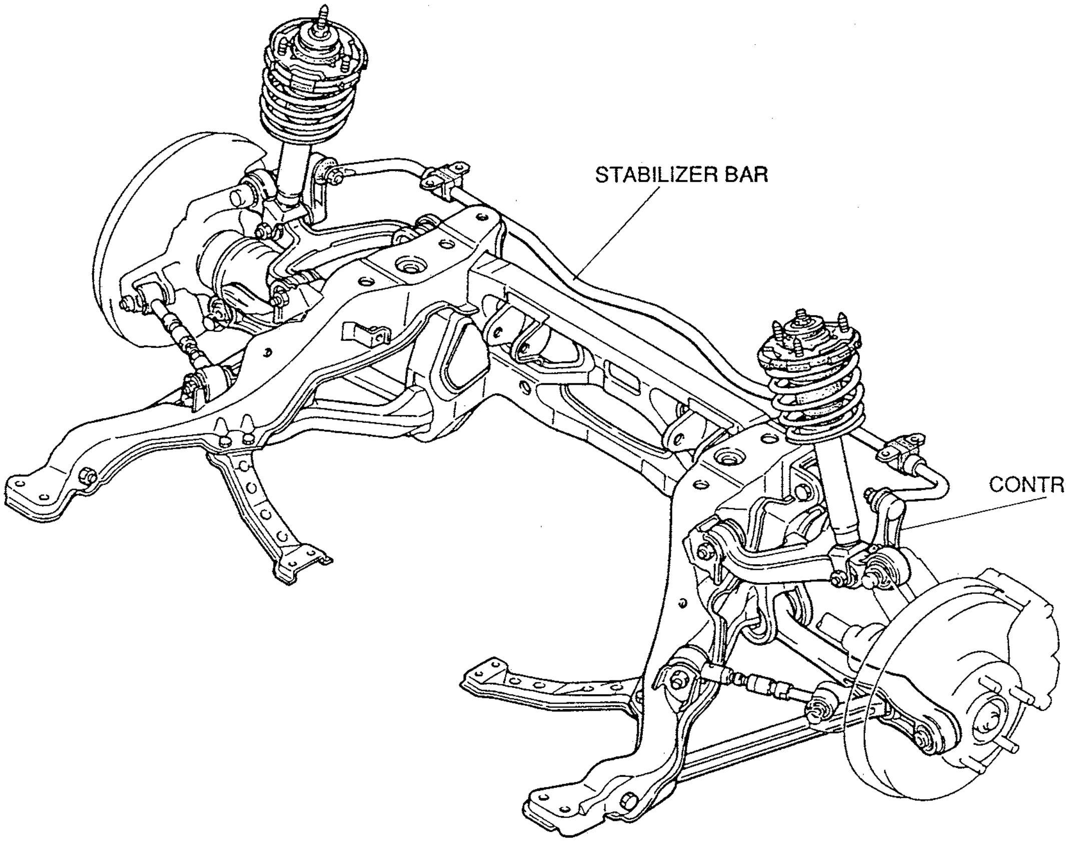

37U0RX-519

- A hollow torsion stabilizer bar was adopted.
- A resinous control link connects the stabilizer bar to the upper arm.
- Ball joint integrated with a bolt at the damper bottom is used for the control link to ensure effective stability and reduce vehicle weight.

Rear Strut Bar

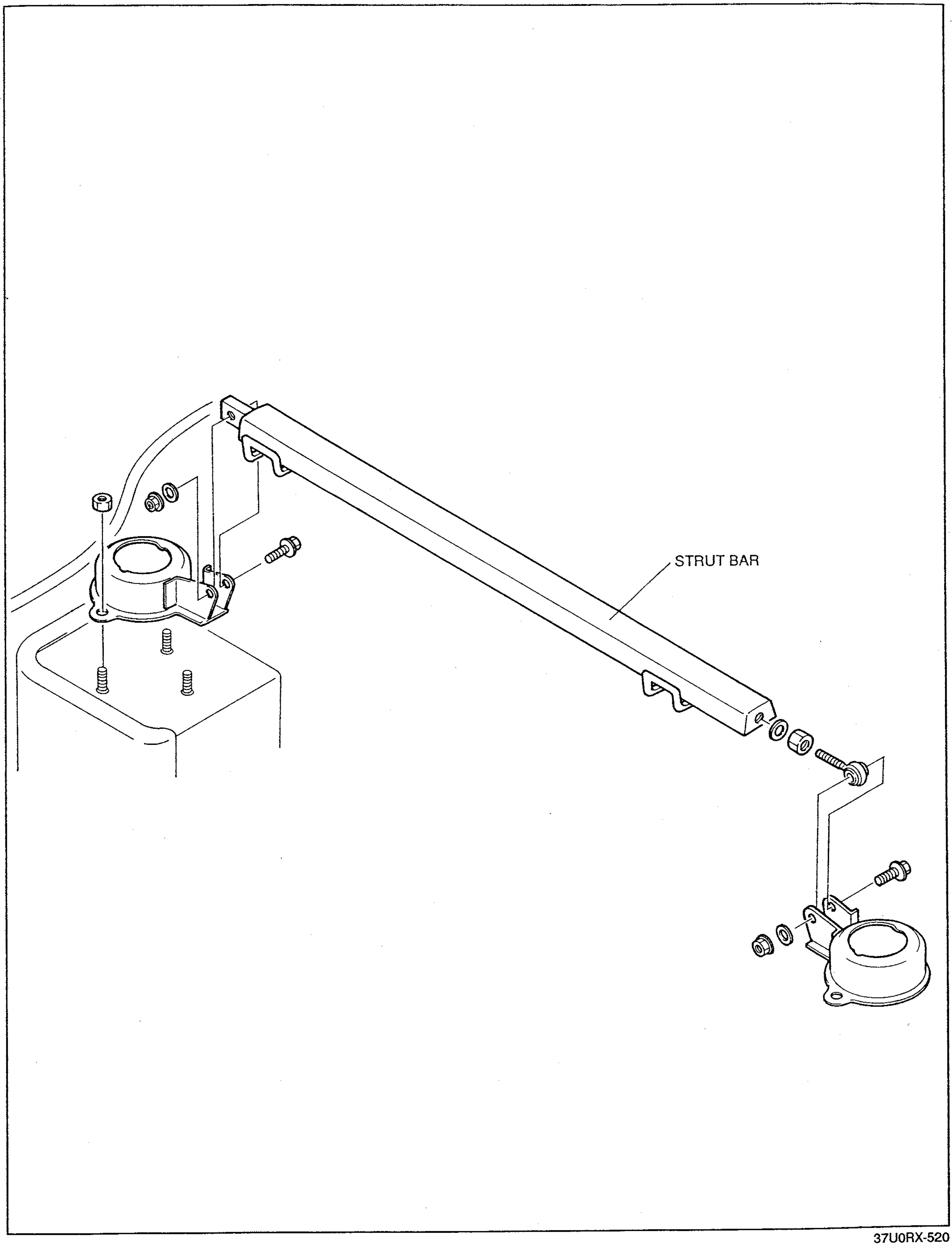

37U0RX-520

- The strut bar improves driving stability.

Rear Suspension Crossmember

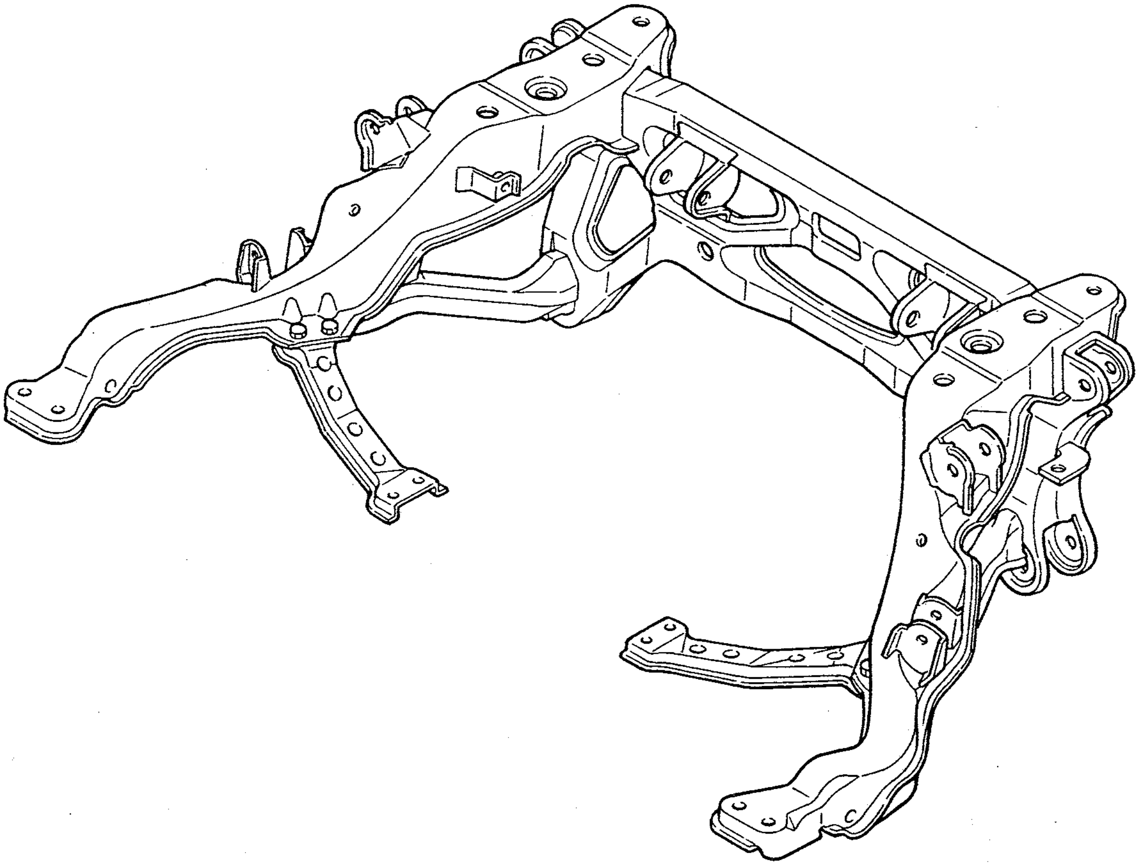

37U0SX-521

- A space-frame truss rear suspension crossmember efficiently supports the monocoque body, providing high rigidity for the suspension.

TOE CONTROL OPERATION

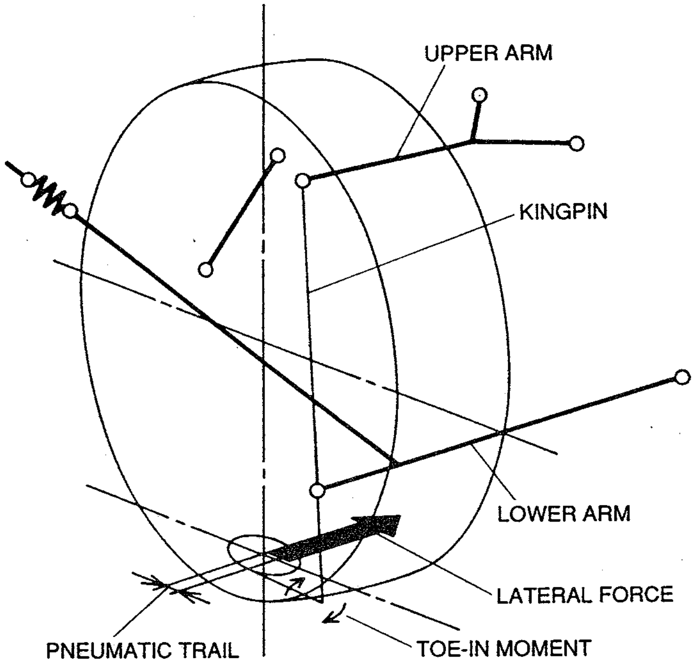

37U0RX-522

Cornering-generated Lateral Forces

- Lateral force forms at a position slightly to the rear of the central point of contact between the tire and ground. This distance between the point of lateral force action and the point of contact between the tire and ground is called the pneumatic trail. The kingpin, which is formed by the ball joints of the upper and lower arms, is rearward of the point of lateral force. The lateral force created at the tire thus generates toe-in moment around the kingpin.
  The lateral force is also transmitted from the upper and lower arms to the toe control link.
  In the new RX-7, desirable toe-out steering is produced by adjusting the fulcrum positioning of the arms and links and optimizing the deflection characteristics of the bushings. This alleviates the toe-in moment generated at the kingpin, thus adding cornering stability for sharp driving performance.

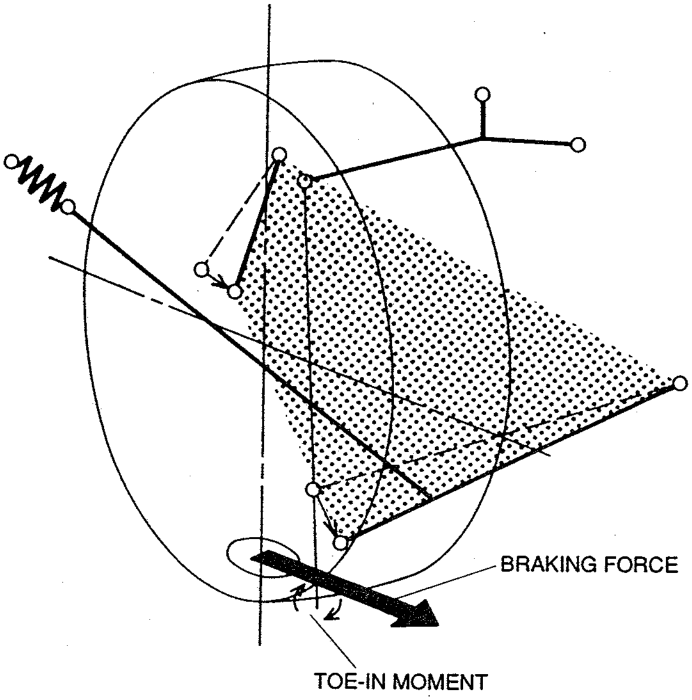

37U0RX-523

Braking Forces

- Rearward braking force forms at the tire-and-ground contact point. In the new RX-7, toe-in moment is generated during braking by setting the kingpin outside the point of the braking force.
  The effect of the trapezoidal link formed by the lower arm and toe control link produces a toe-in steering component with a slight rearward movement of the tire during braking. This ensures reliable stability when braking.

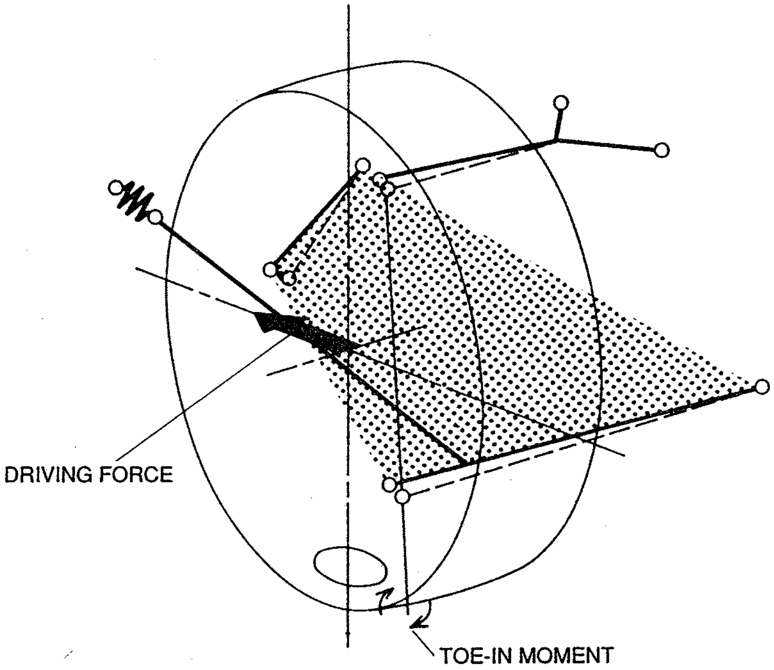

37U0RX-524

Driving Forces

- Rearward driving forces are generated at the wheel center. In the new RX-7, toe-in moment is generated when driving by setting the kingpin inside the point of braking force.
  The effect of the trapezoidal link formed by the lower arm and toe control link produces a toe-out steering component with a slight forward movement of the tire during driving. This alleviates the toe-in moment generated at the kingpin. As a result, stable performance is obtained when driving straight as well as when slightly accelerating around corners.

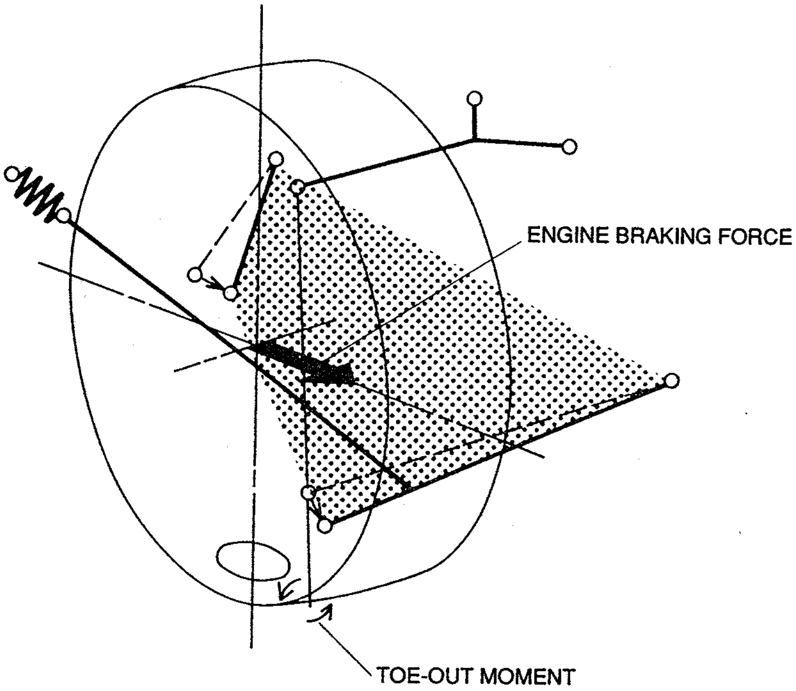

37U0RX-525

Engine Braking Forces

- Rearward engine braking forces are generated at the wheel centers. Toe-out moment is generated around the kingpin by such component force. The trapezoidal link effect produces a toe-in steering component, the opposite of that generated by driving force.
  In the new RX-7, this alleviates toe-in moment generated at the kingpin. As a result, stable performance is obtained when driving straight as well as during slight engine braking.

BODY

37U0SX-501

OUTLINE

- An efficient structural design and widely used, high-strength sheet metal panels produce a light and rigid body structure.
- The wide use of rustproof sheet metal panels improves antirust protection.
- A streamlined body with flush exterior panels lowers the coefficient of drag.

37U0SX-502

FEATURES

Improved safety	Body structure emphasizes safety
	Shock-absorbing bumpers are used
	Security system is fitted to rear hatch
Reduced noise and vibration	Antivibration laminated sheet metal panels are used
	High-strength antivibration materials are used
	Suspension housing reinforcements are fitted
	Tunnel reinforcements are used
Reduced vehicle weight	Aluminum hood is employed
Improved antirust protection	Organic-resin-coated sheet metal panels are used
Improved reliability	Large cross section weatherstrips are installed
	Circuit breaker included in front wiper system to protect against overloading
Improved serviceability	TORX type screws are used for door lock striker installation
Improved aerodynamic characteristics	Front air dam and rear spoiler are standard equipment
	Flat underbody provides venturi effect
	Moldings are flush with exterior panels
Improved comfort	Sunroof is optionally available
Enhanced quality	Leather-covered seats are included
	Instrument panel is separately colored to contrast with interior trim

37U0SX-503

External View

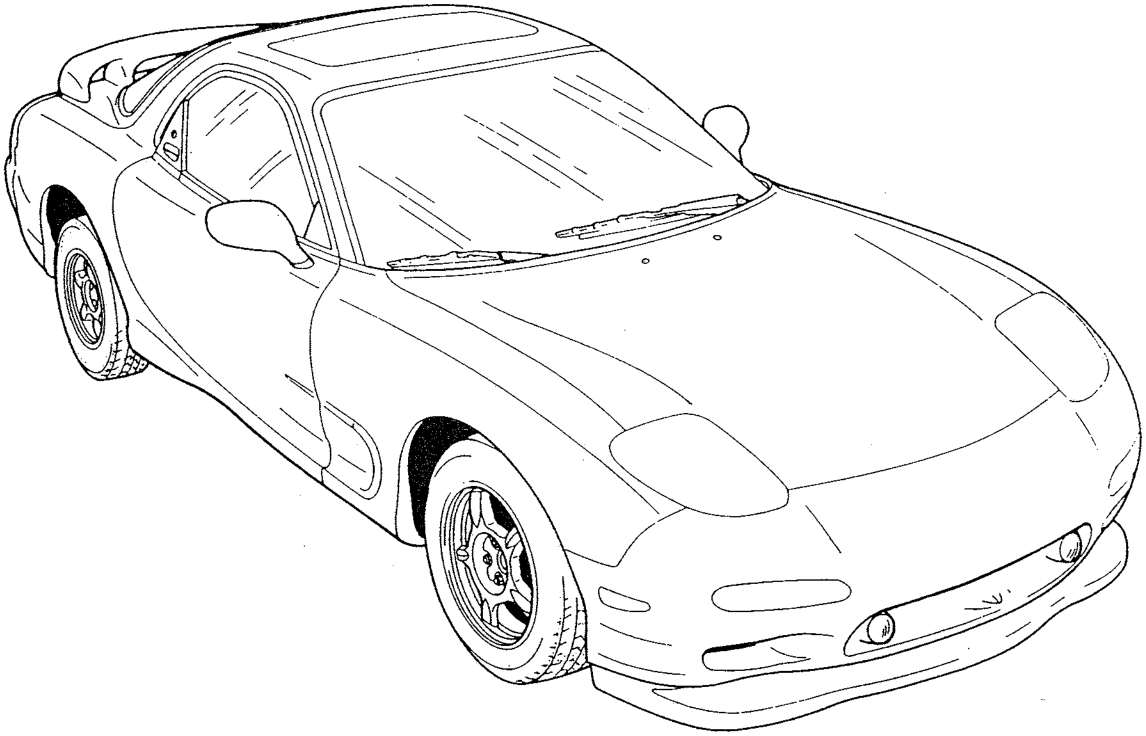

37U0SX-504

- The body is superbly proportioned with a short, low nose and a wide, low configuration, made possible by the use of a compact rotary engine. The result is a unique, original sports car look.

BODY STRUCTURE

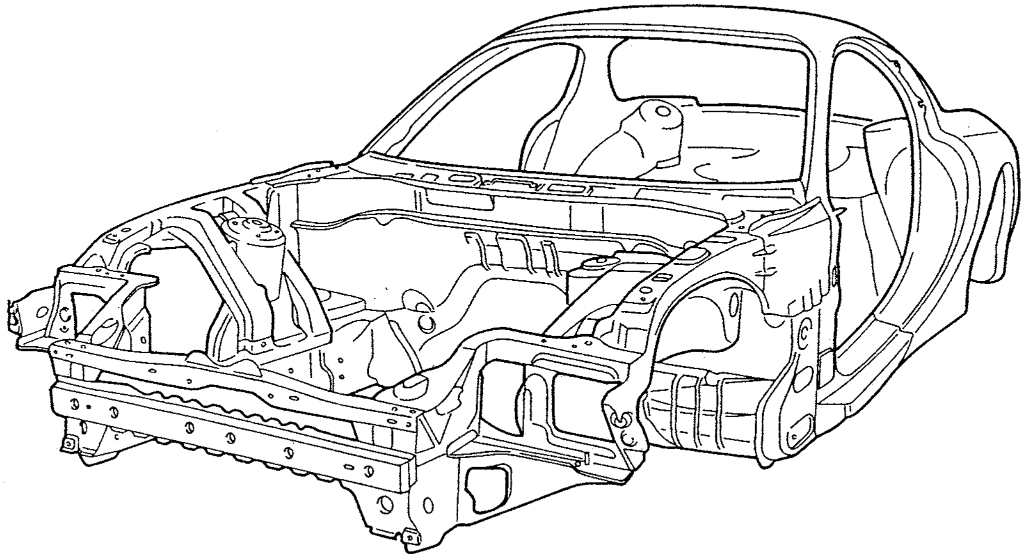

37U0SX-505

- To reduce vehicle weight while maintaining rigidity, high-tension sheet metal panels are used throughout the body.
- To ensure user safety, the front frame is built with an enlarged cross section and a rear center frame is adopted to absorb the shock of a collision.

Head-on Collision Protection

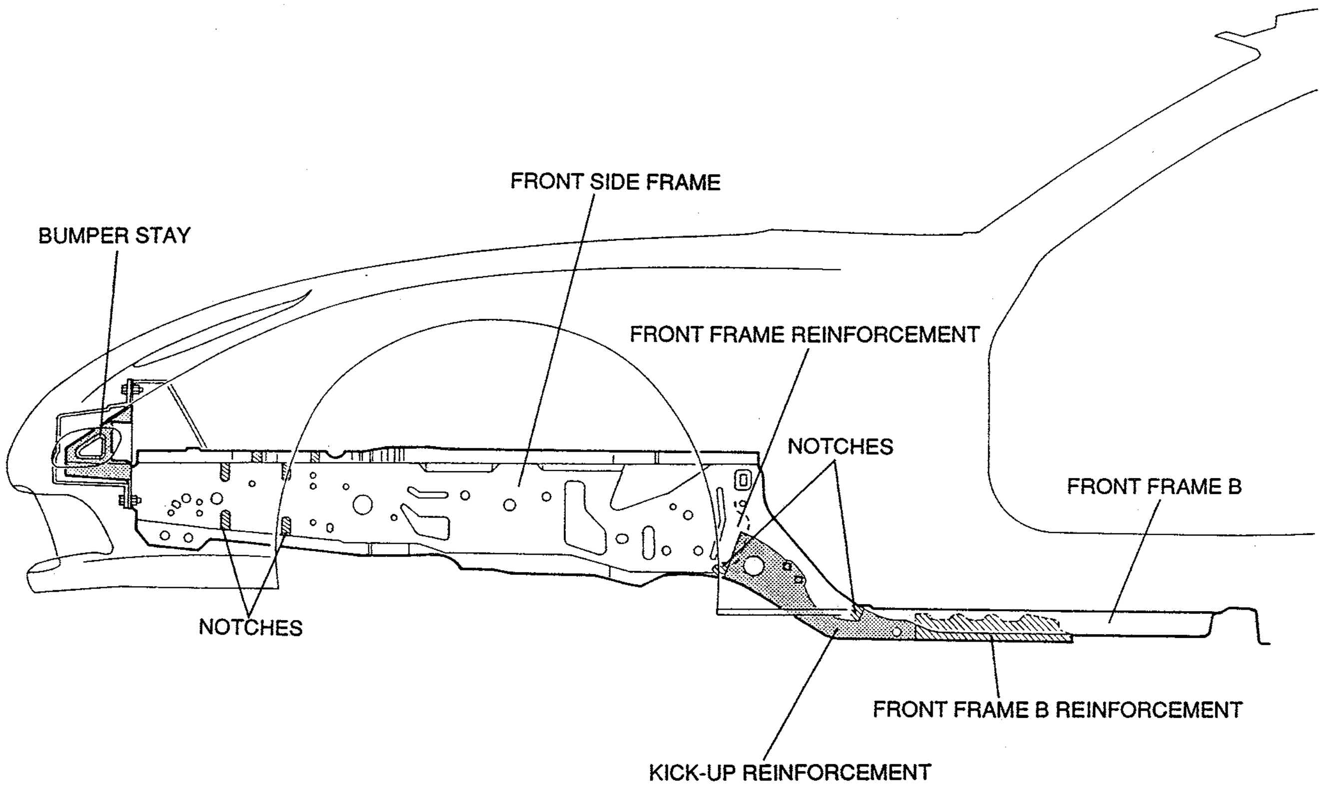

37U0SX-506

- A bumper stay is incorporated in the front side frame to absorb the initial impact of a head-on collision and reduce shock to the passenger compartment.
- The cross section of the front side frame is enlarged to improve its shock absorption efficiency.
- The front side frame is made with stress notches at the front section and on the kick-up section. These notches encourage controlled collapsing in a collision to absorb and reduce shock to the passenger compartment.
- For improved rigidity, reinforcements are added to the front side frame kick-up section and to the joint of the front side frame and front frame B section.

Rear Collision Protection

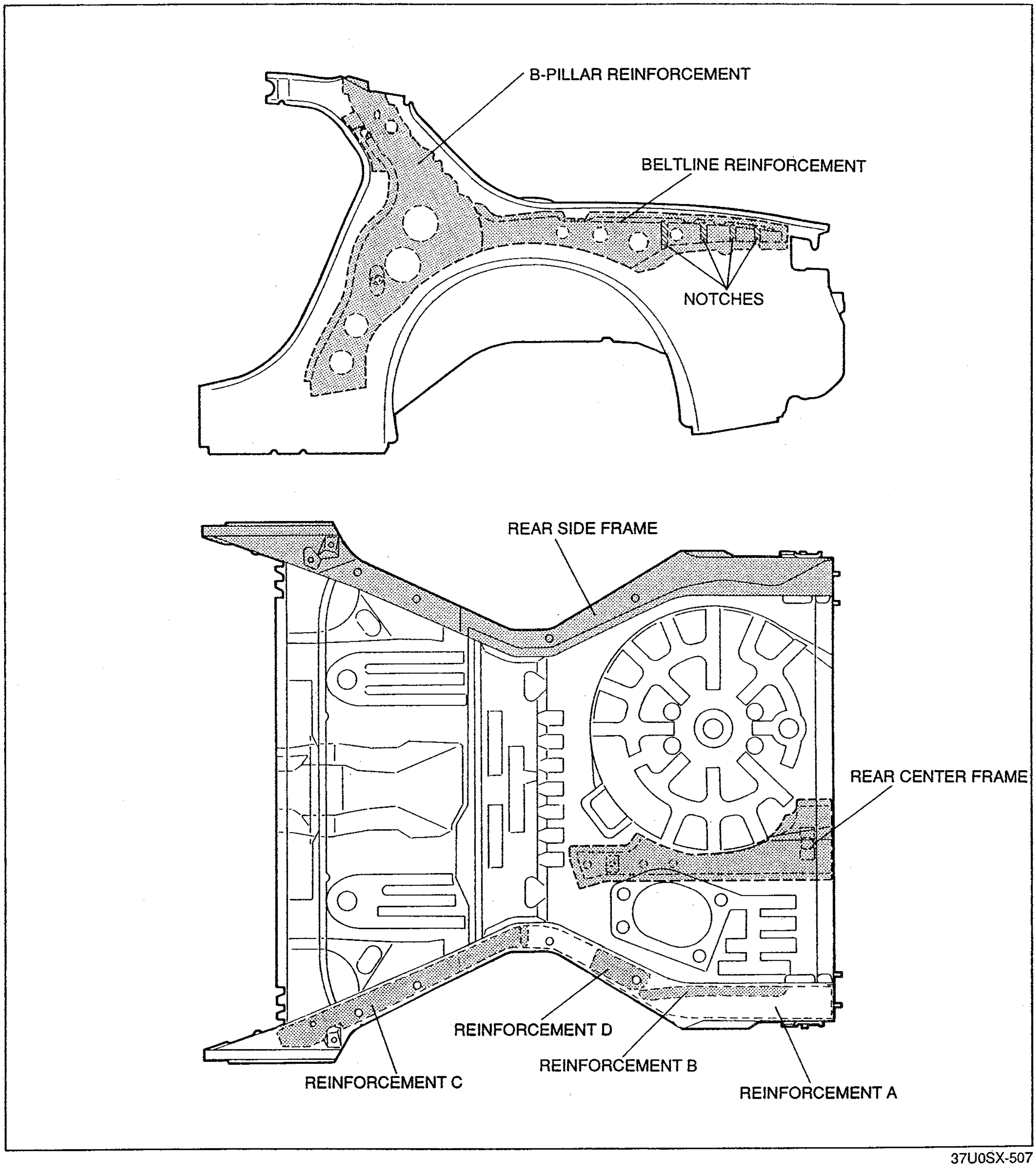

37U0SX-507

- A rear center frame fits parallel to the rear side frame to improve rear collision protection.
- The beltline reinforcement has stress notches that collapse in a rear collision to absorb shock. The B-pillar reinforcement receives and reduces shock from the beltline reinforcement for increased protection of the passenger compartment and doors.
- Reinforcements A, B, and D are attached to the rear side frame to control shock in a rear collision and protect the fuel tank.
- Frame reinforcement C is added to the rear side frame kick-up section for increased protection of the passenger compartment and doors.

Side Collision Protection

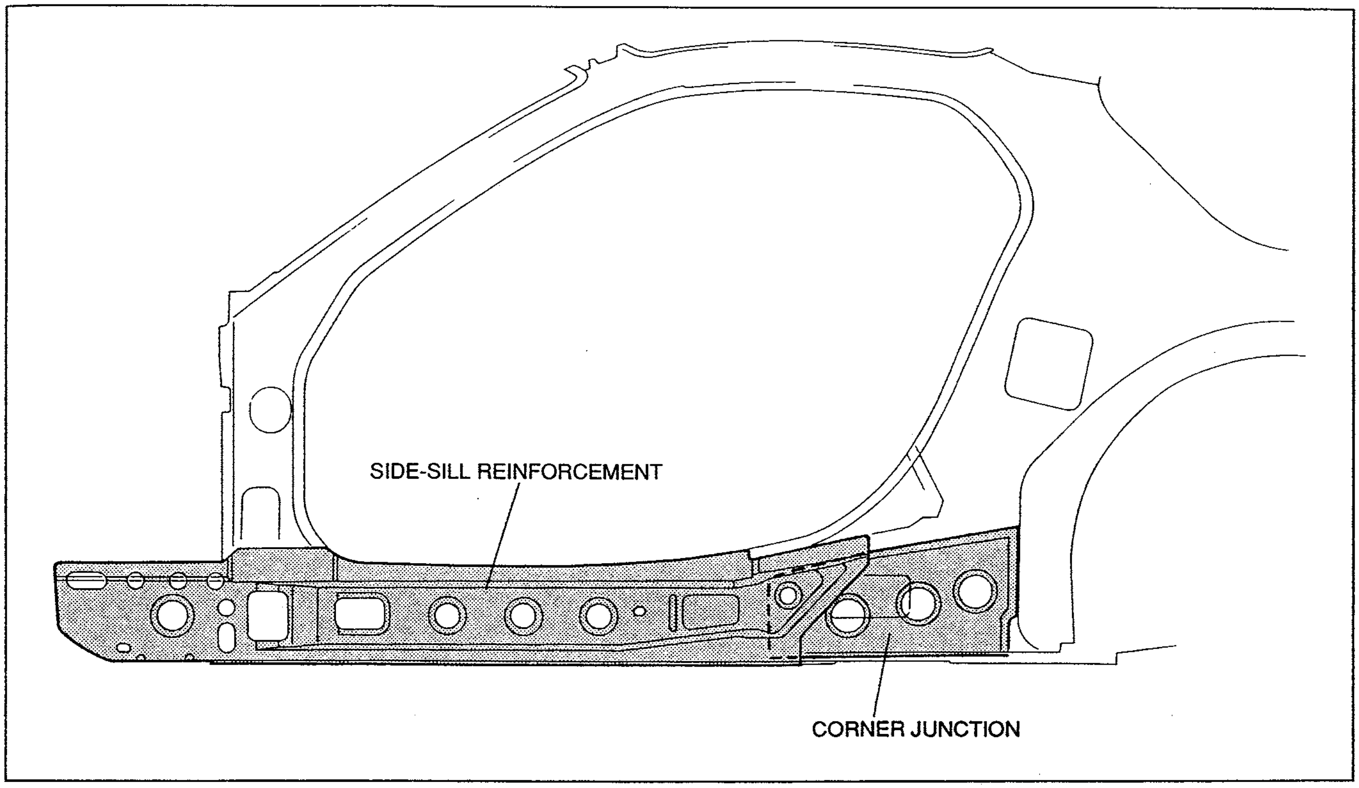

37U0SX-508

- The sides of the vehicle are strengthened with side-sill reinforcement and a corner junction for increased protection in a side collision.

Suspension Housing Reinforcement

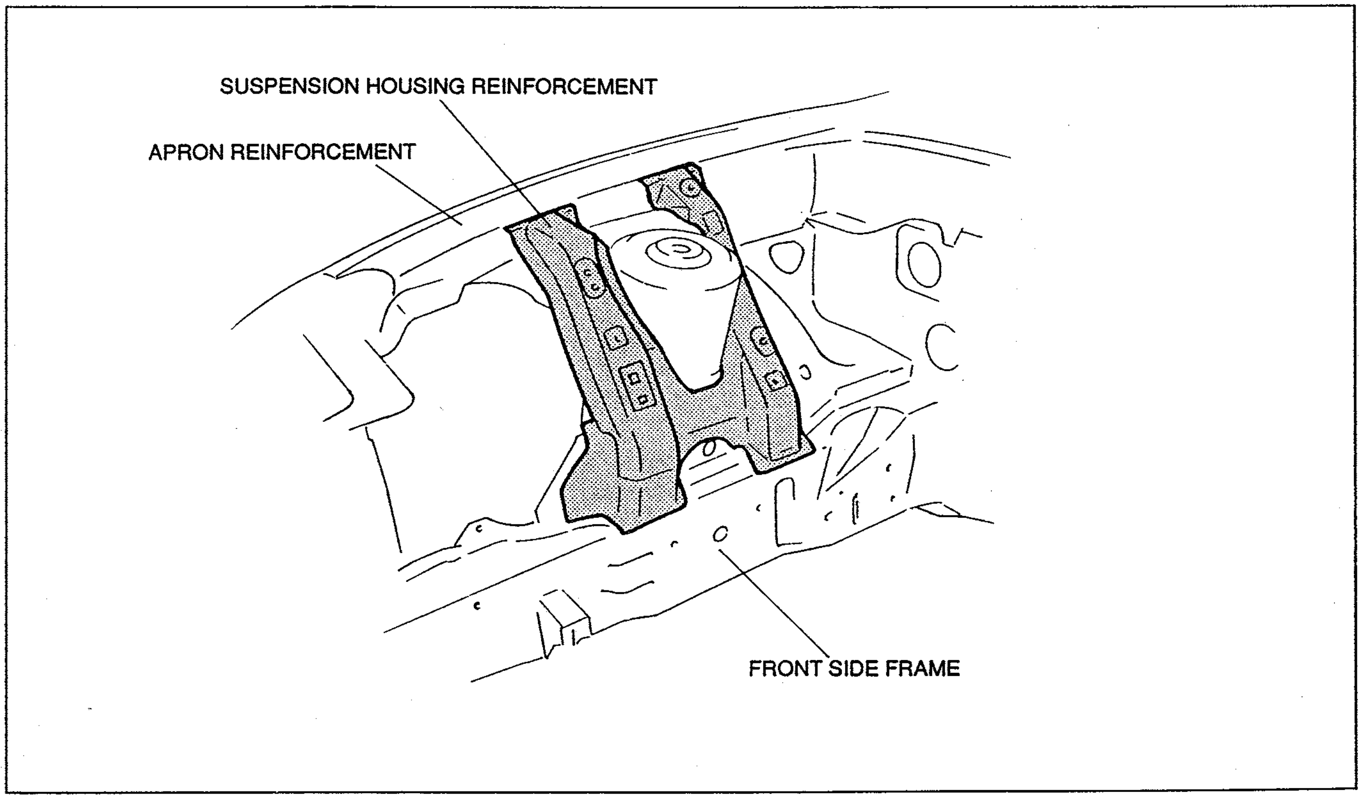

37U0SX-509

- An extremely strong and rigid structure is achieved by using a reinforcement at the front side frame and apron reinforcement of the front suspension tower.

Antivibration Laminated Steel Plate

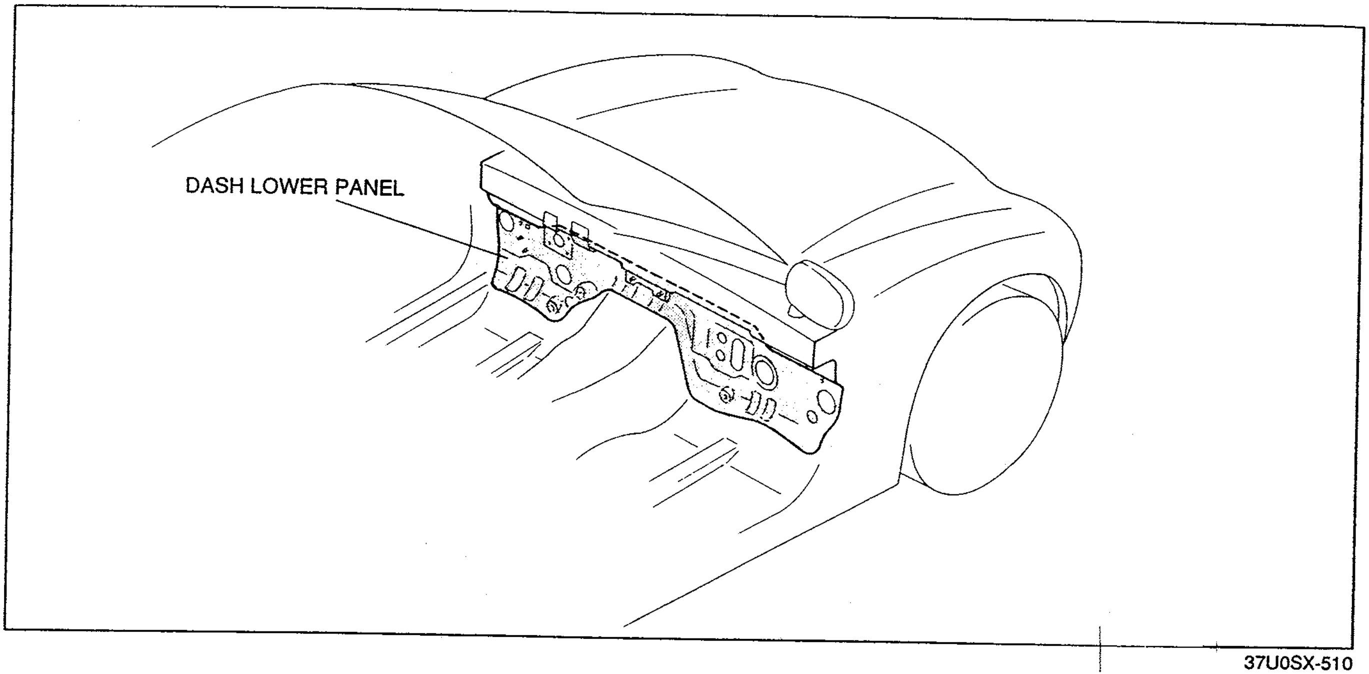

37U0SX-510

- To reduce vibration and improve soundproofing, an antivibration laminated steel plate is used for the dash lower panel. This three-part laminated steel plate features a resin filler between two steel panels.

Antivibration Materials

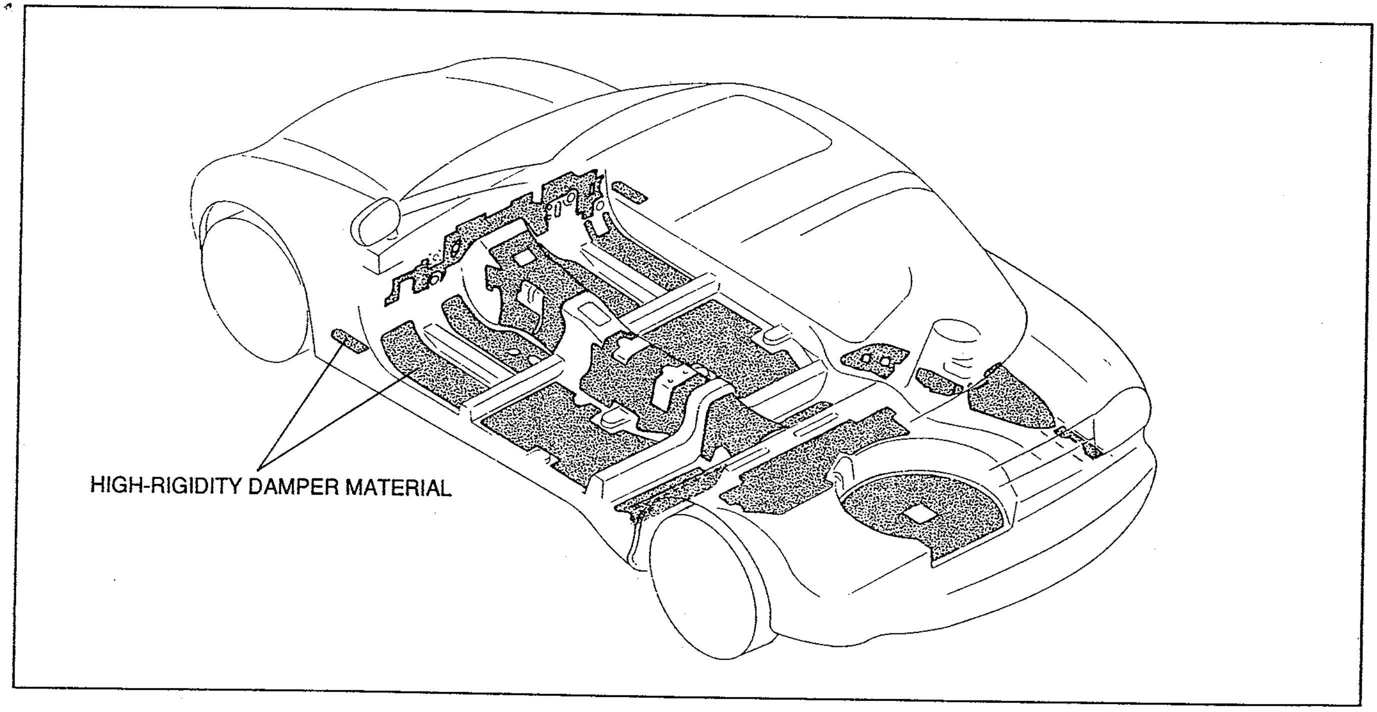

37U0SX-511

- Antivibration, soundproofing materials are fitted in the following locations:
  - Lower dash panel
  - Front floor pan
  - Center floor pan
  - Rear floor pan
  - Trunk floor pan
- A newly developed, high-strength antivibration material is used for the lower dash panel and floor area. This material is more than twice as effective as previous types in reducing vibration and noise. Yet, because it is light, the overall weight of the vehicle is reduced.

Organic-Resin-Coated Sheet Metal

- This metal, coated with organic resin over an electrogalvanized or nickel-alloy-plated coating, greatly increases antirust protection.

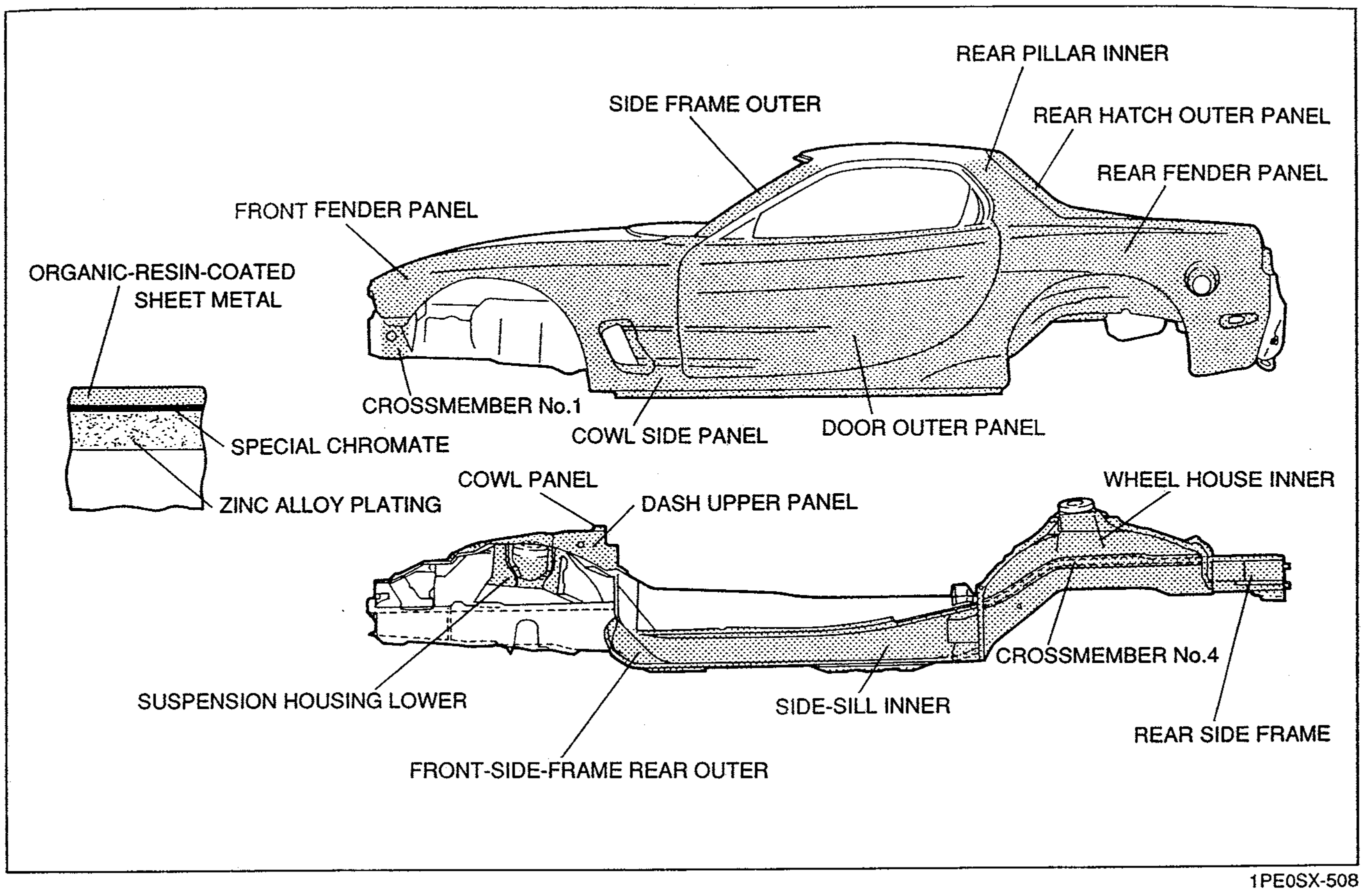

1PE0SX-508

DOOR STRIKER SCREWS

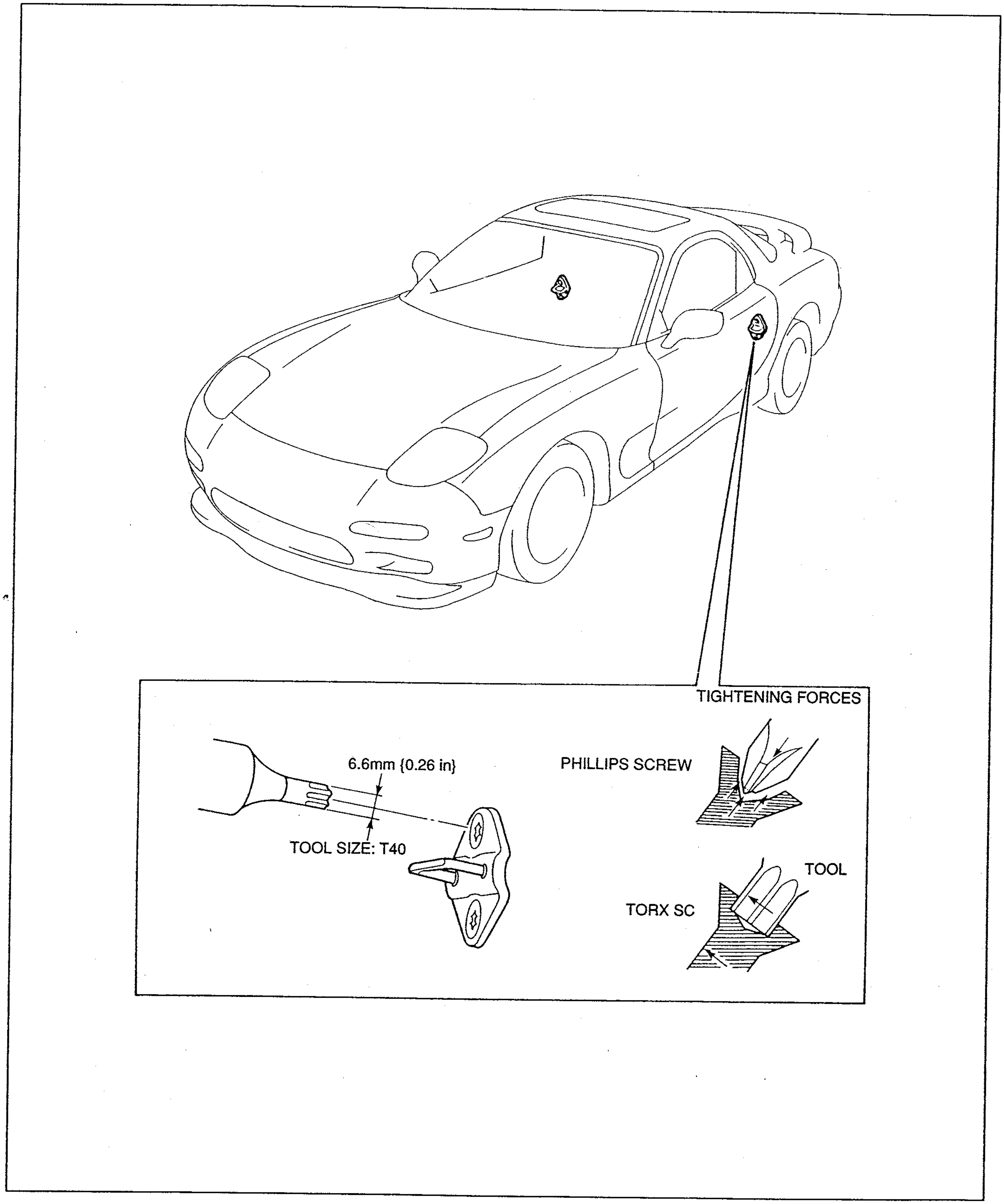

37U0SX-512

- The door strikers are installed with TORX type screws that improve initial assembly and serviceability.

Features

- The torque of the TORX tool is more efficiently transmitted to the screw, lessening the chance of the screw head "rounding out."

HOOD

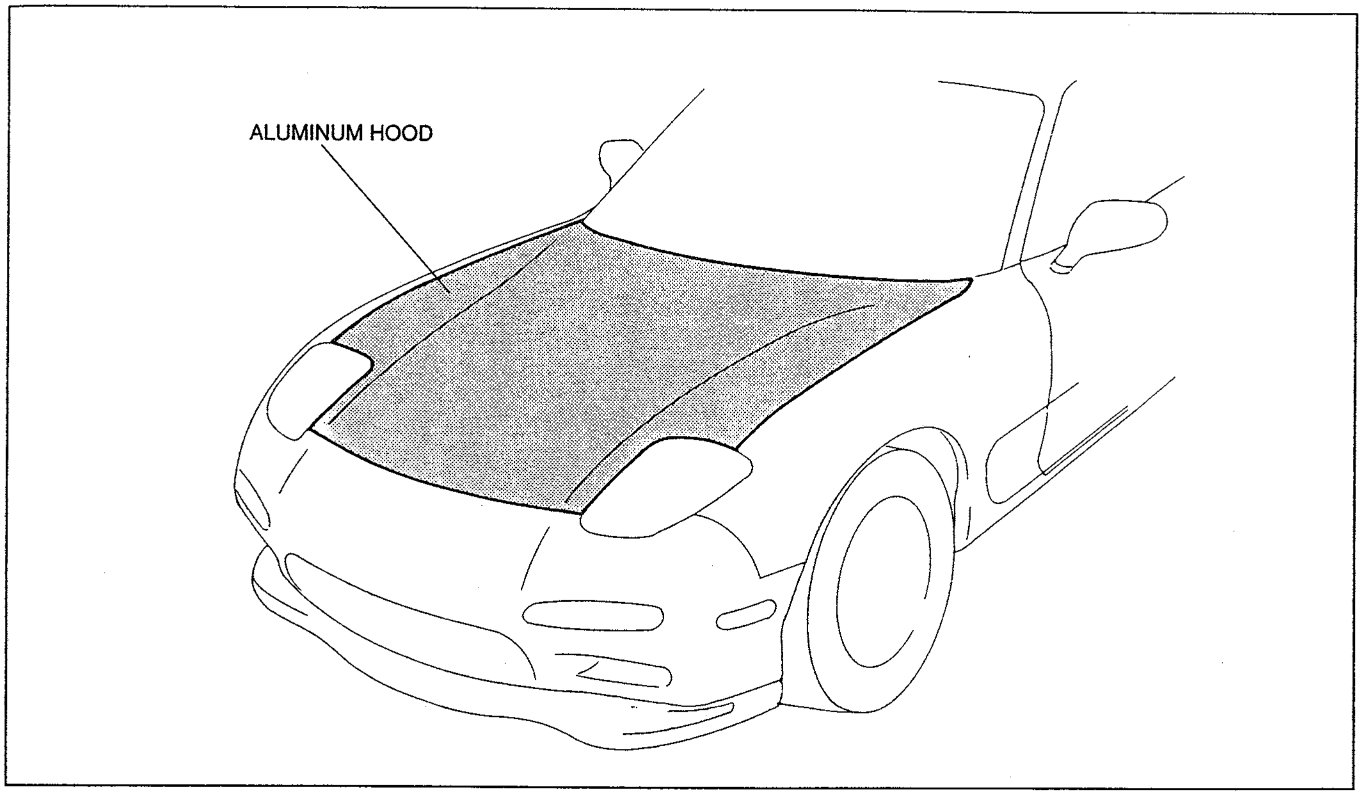

37U0SX-513

- An aluminum hood is adopted to reduce vehicle weight.
- Hood insulation is used to insulate and soundproof the engine compartment.

TUNNEL REINFORCEMENT MEMBERS

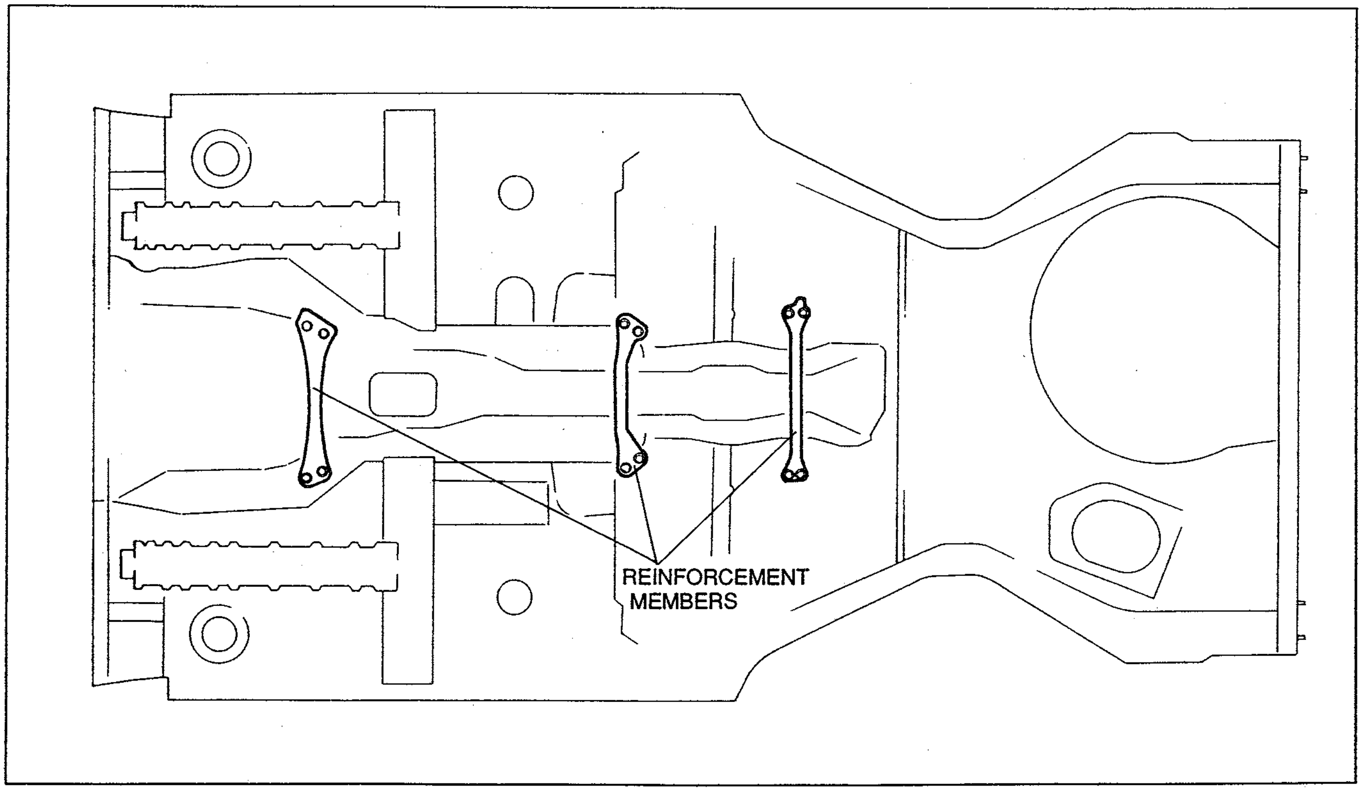

37U0SX-514

- Three aluminum tunnel-reinforcing members are fitted to the drivetrain tunnel to improve rigidity of the body and to reduce noise and vibration.

WEATHERSTRIP

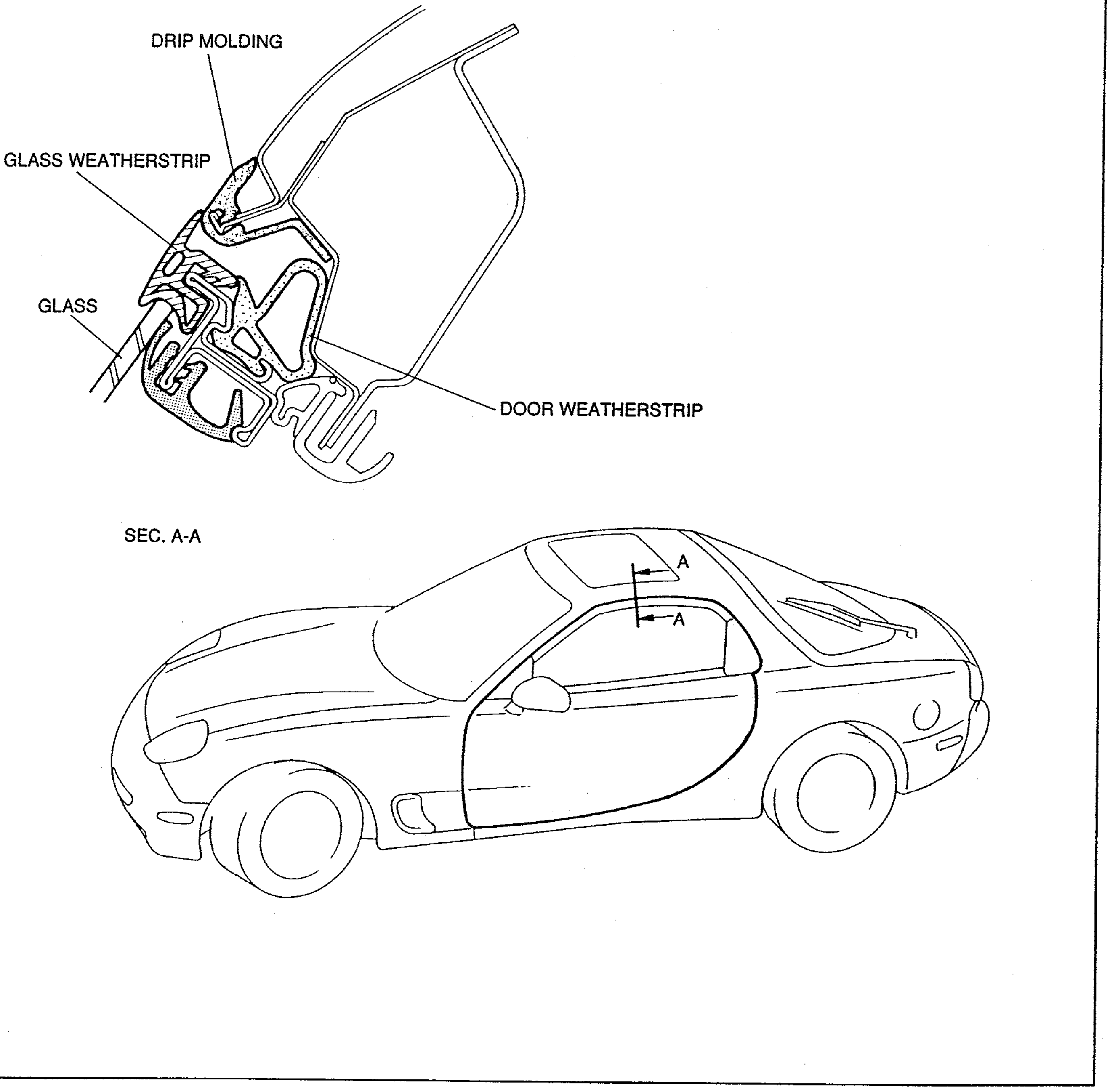

37U0SX-515

Door Weatherstrip

- The door sash and the door glass are installed as flush as possible to reduce air drag and wind noise during cruising.
- Large cross-section weatherstrip is used to effectively control water leakage and wind noise by filling the gap between the door and the body structure.
- Glass weatherstrip is provided between the drip molding and the sash to provide superior sealing.

REAR HATCH

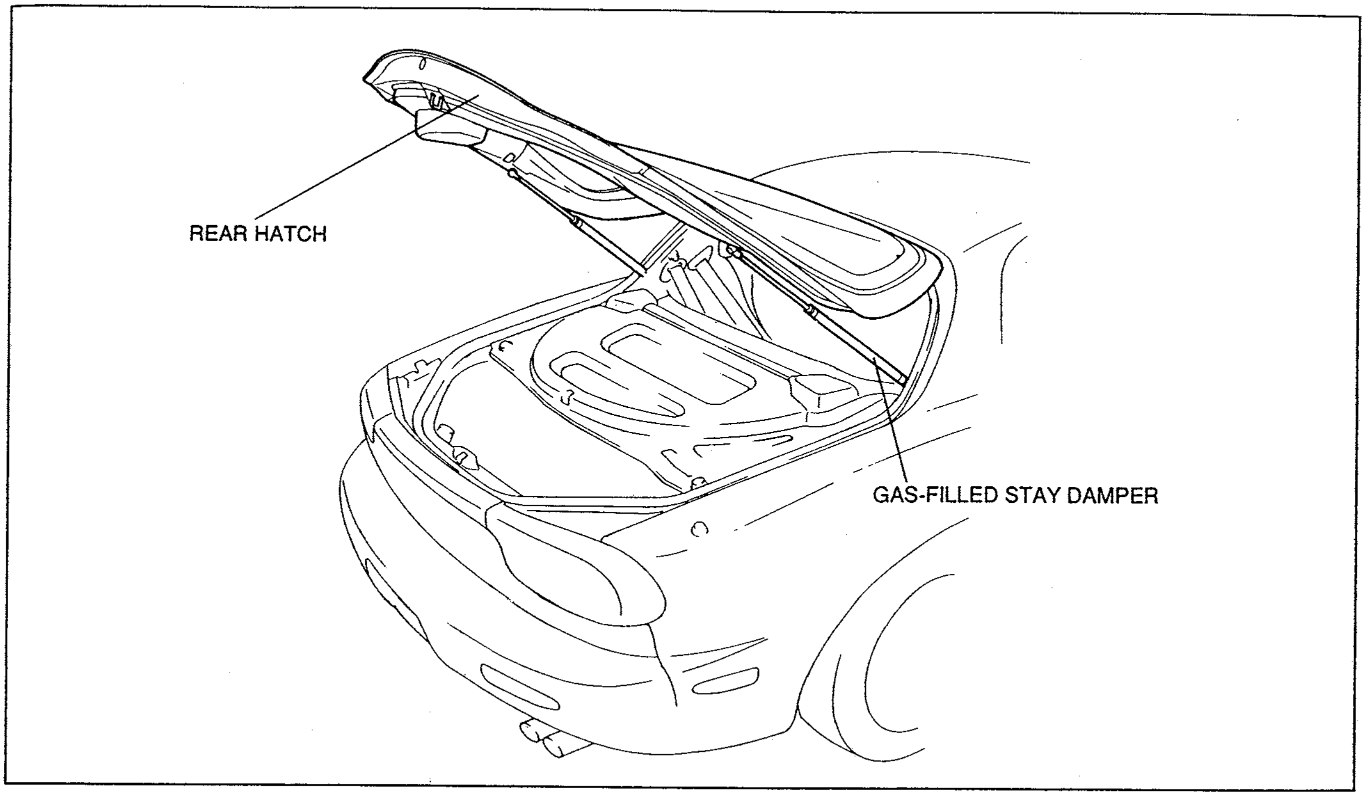

37U0SX-516

- Gas-filled stay dampers are used on the rear hatch to make opening and closing easier and smoother.

REAR HATCH GLASS

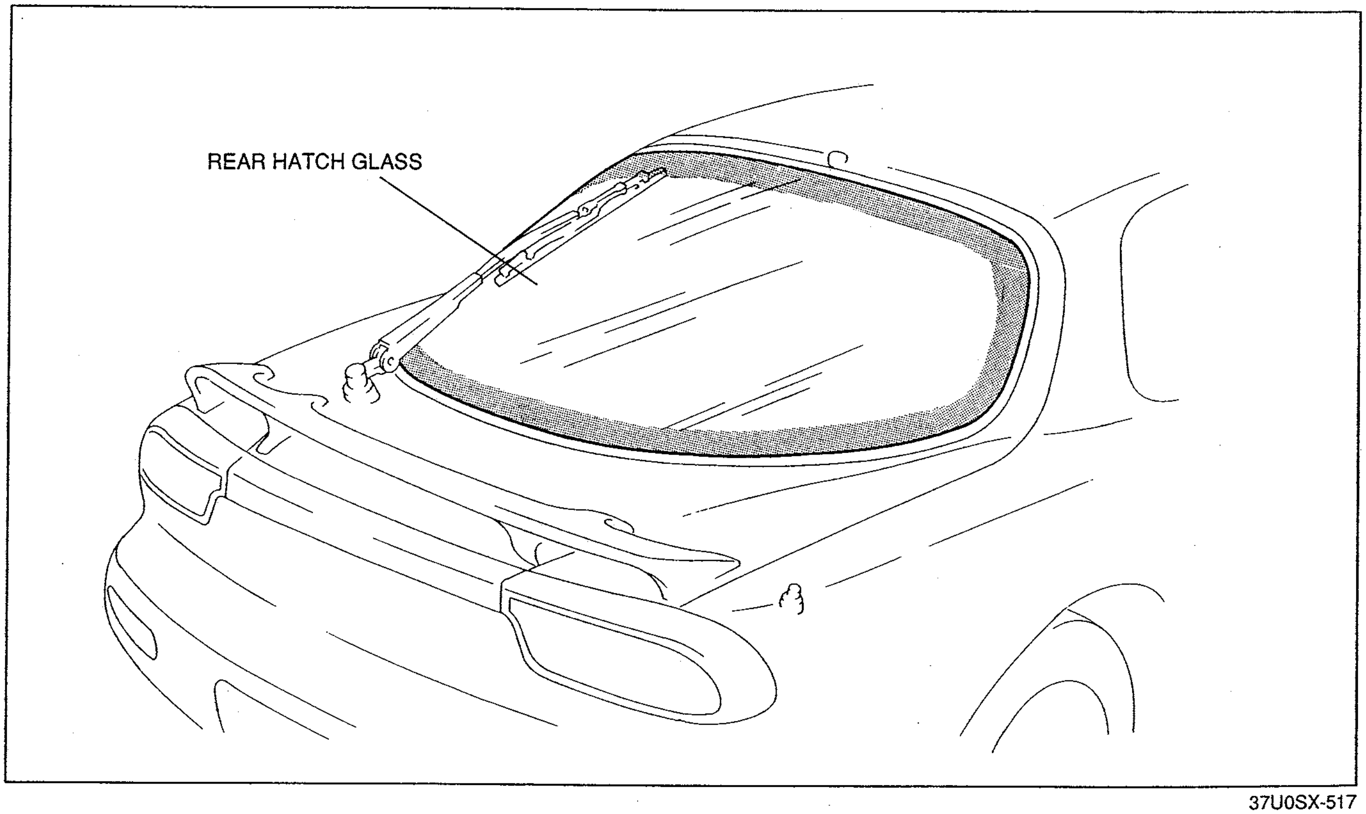

37U0SX-517

- The multicurved rear hatch glass is manufactured by the press-bend method. This intricately styled glass contributes to the overall aerodynamics of the vehicle.

BUMPERS

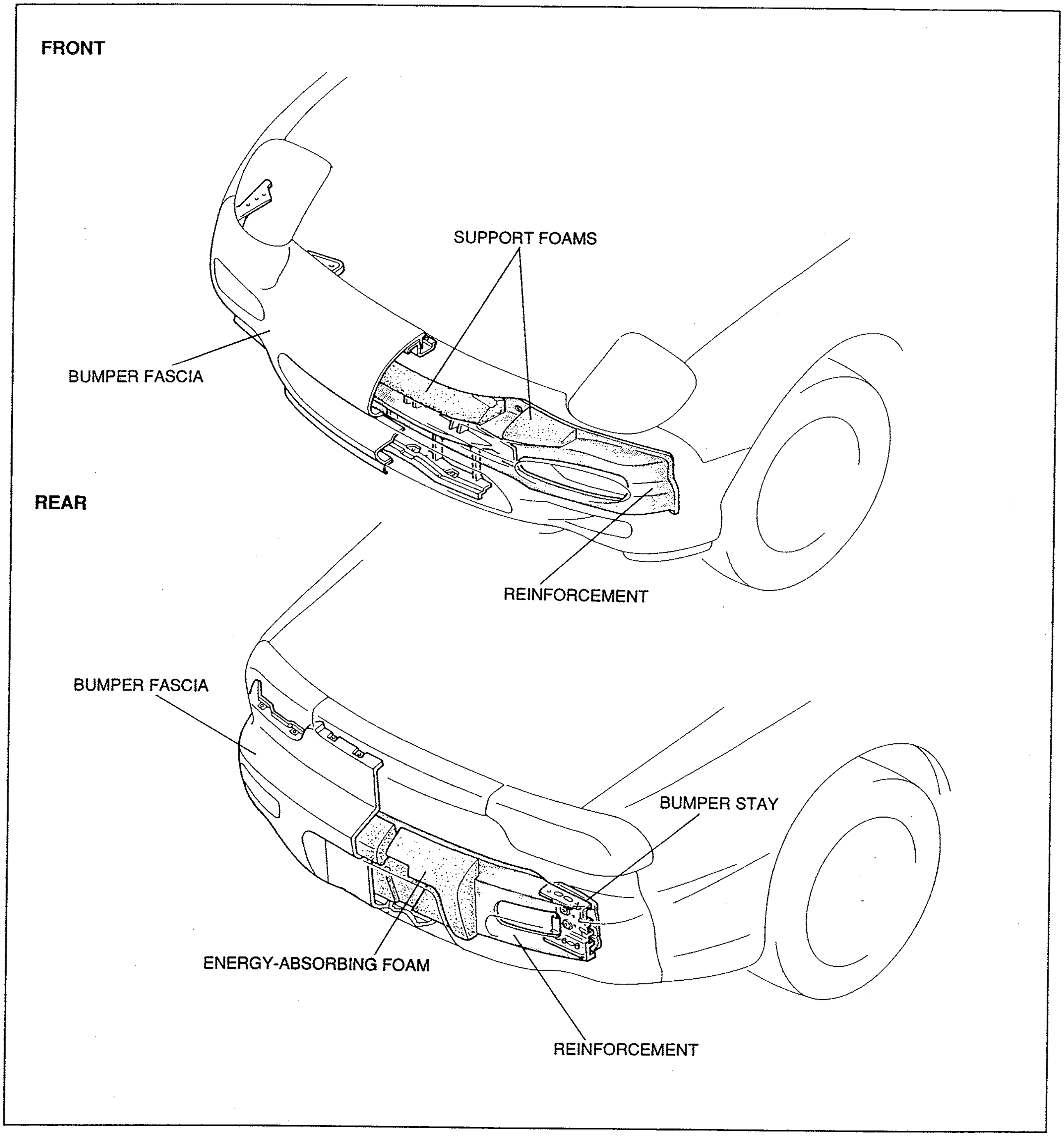

37U0SX-518

- Large, lightweight, body-colored bumpers are used at the front and rear.

Front Bumper

- The bumper fascia is made of urethane, which has a smooth finish, for an improved appearance.
- Highly tenacious reinforced resin is mixed with glass fiber for use as front bumper reinforcement. This greatly increases the shock absorbing capacity of the bumper and improves safety.
- All set plates and brackets are made from aluminum to reduce vehicle weight.

Rear Bumper

- An aluminum bumper reinforcement with a large cross section is used, increasing safety and lowering weight.

AIR DEFLECTORS

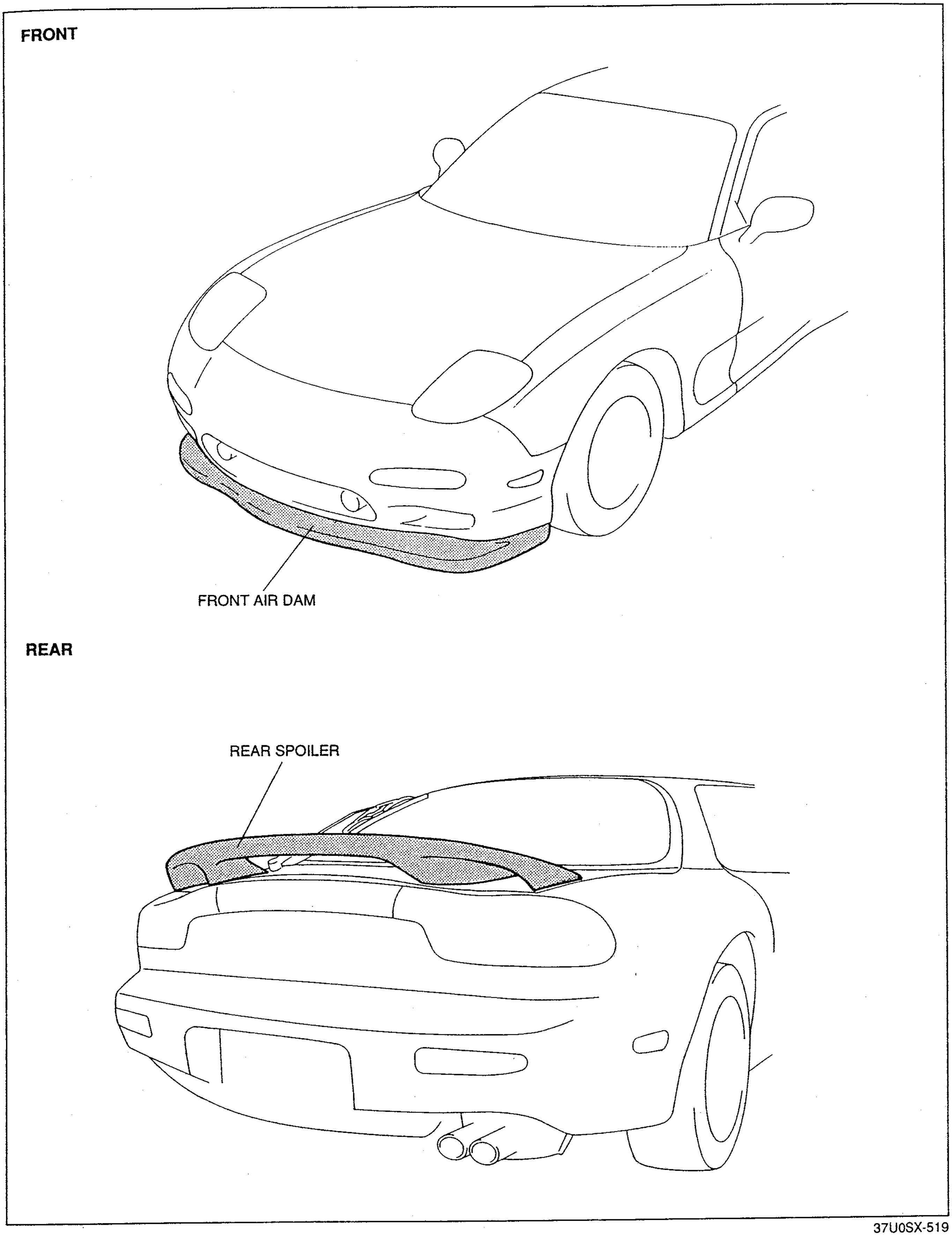

37U0SX-519

- A front air dam and a rear spoiler enhance appearance and improve vehicle aerodynamics and stability during high-speed driving.

MOLDING

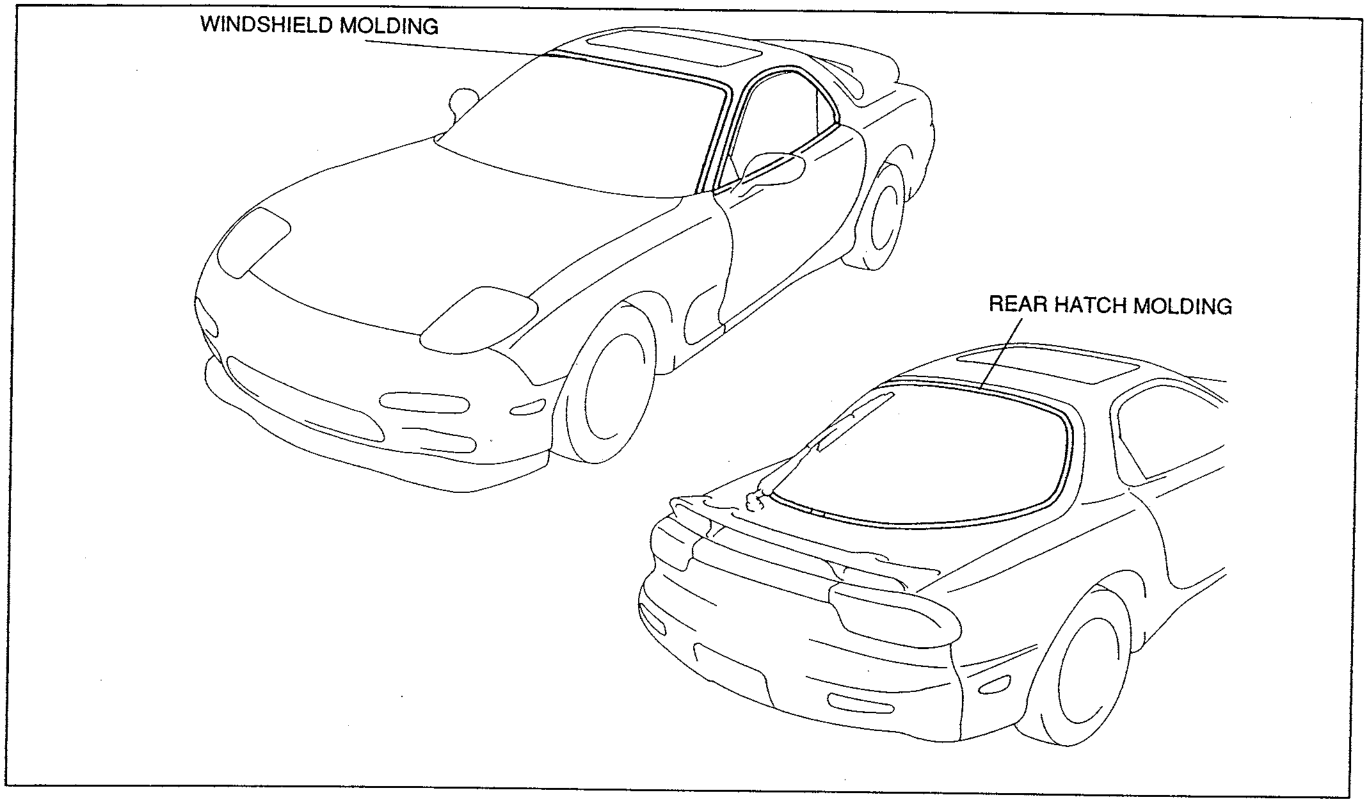

37U0SX-520

- Flush moldings on the windshield and rear hatch window minimize the gap between the glass and body panels, adding to the vehicle's smoothness.

DOOR GLASS

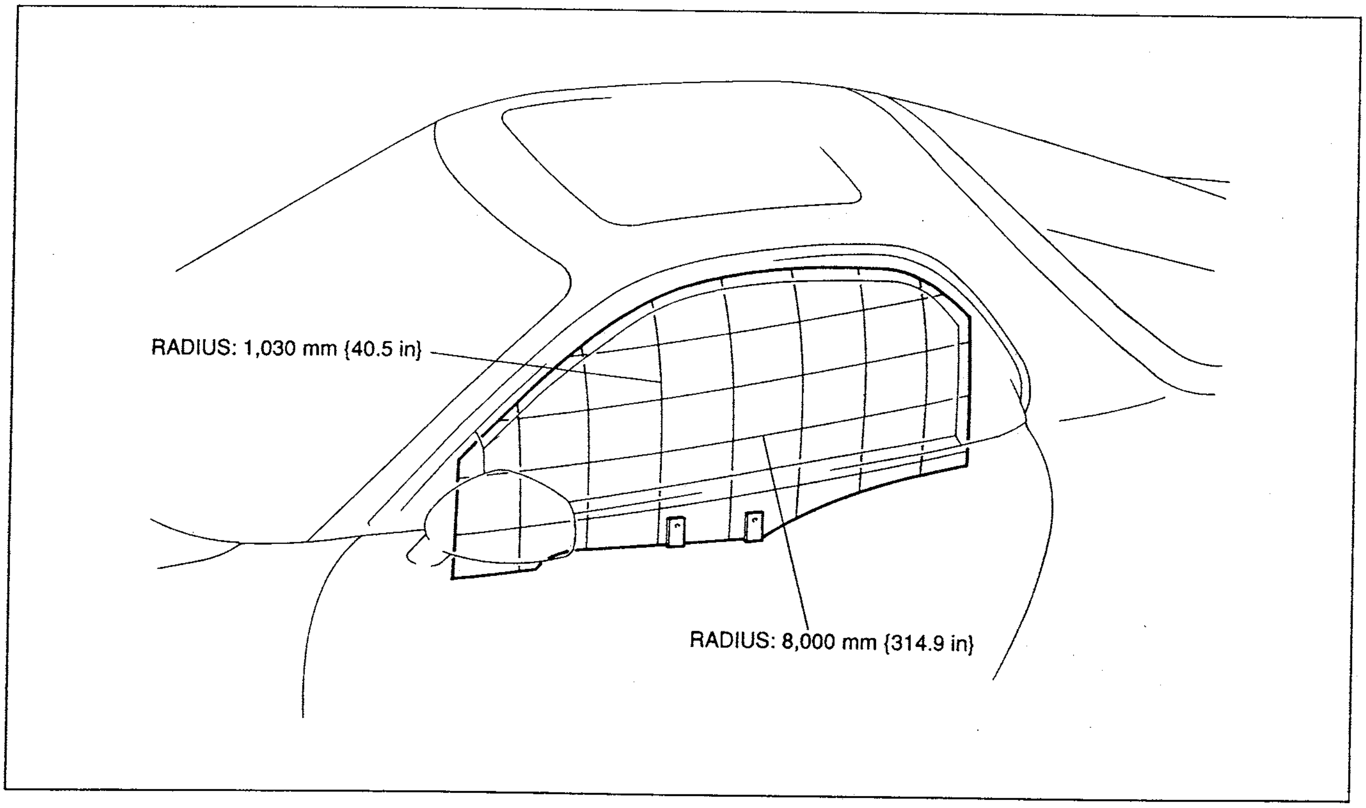

37U0SX-521

- Three-dimensionally curved door glass (vertical: R 1,030 mm {40.5 in}, horizontal: R 8,000 mm {314.9 in} helps the vehicle to achieve superior aerodynamics.

POWER OUTSIDE MIRRORS

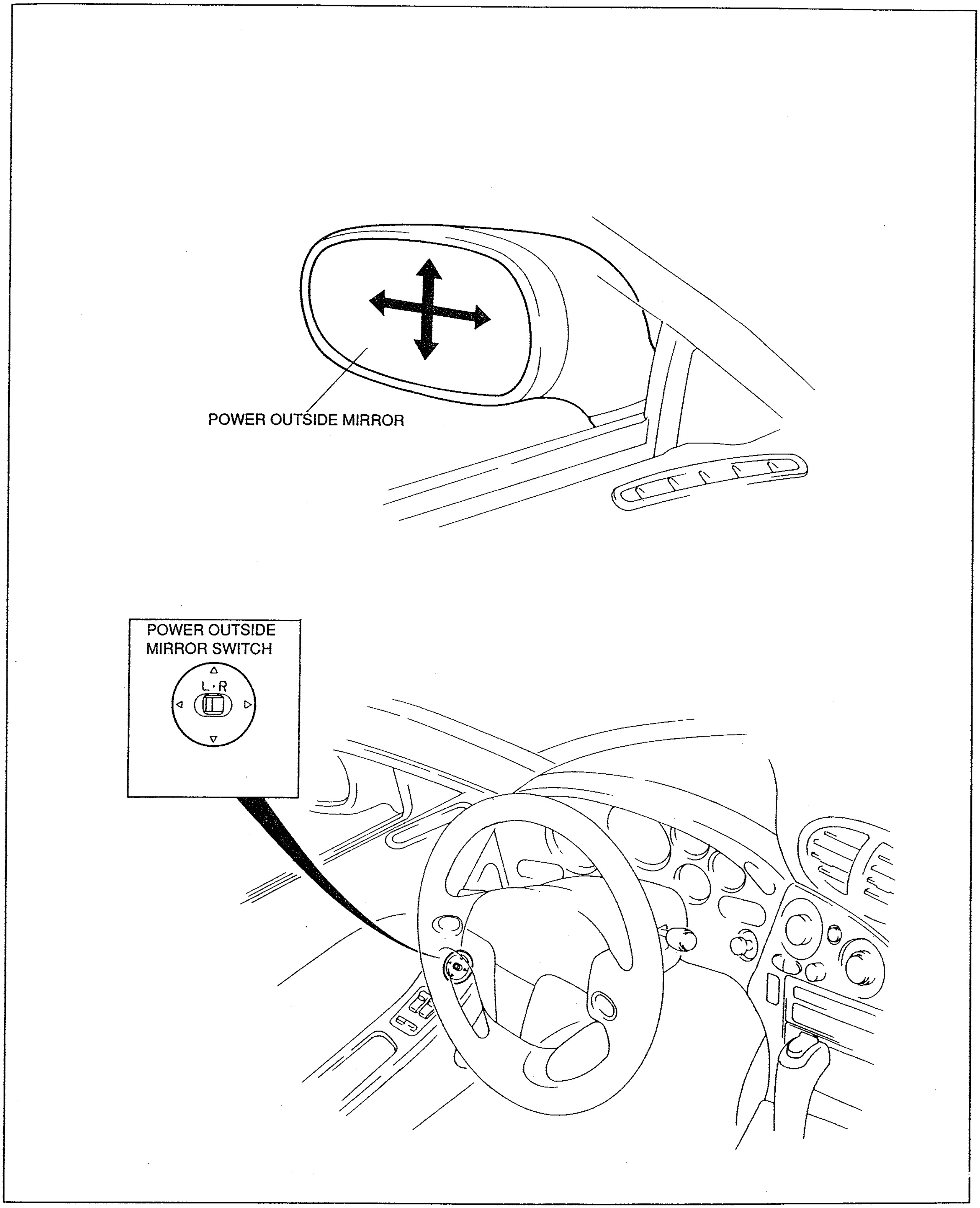

37U0SX-522

- The door-mounted mirrors are styled to match the body configuration for improved aerodynamics and appearance.
- Power outside mirrors are standard equipment on all models for added convenience.

WINDSHIELD WIPERS AND WASHER

STRUCTURAL VIEW

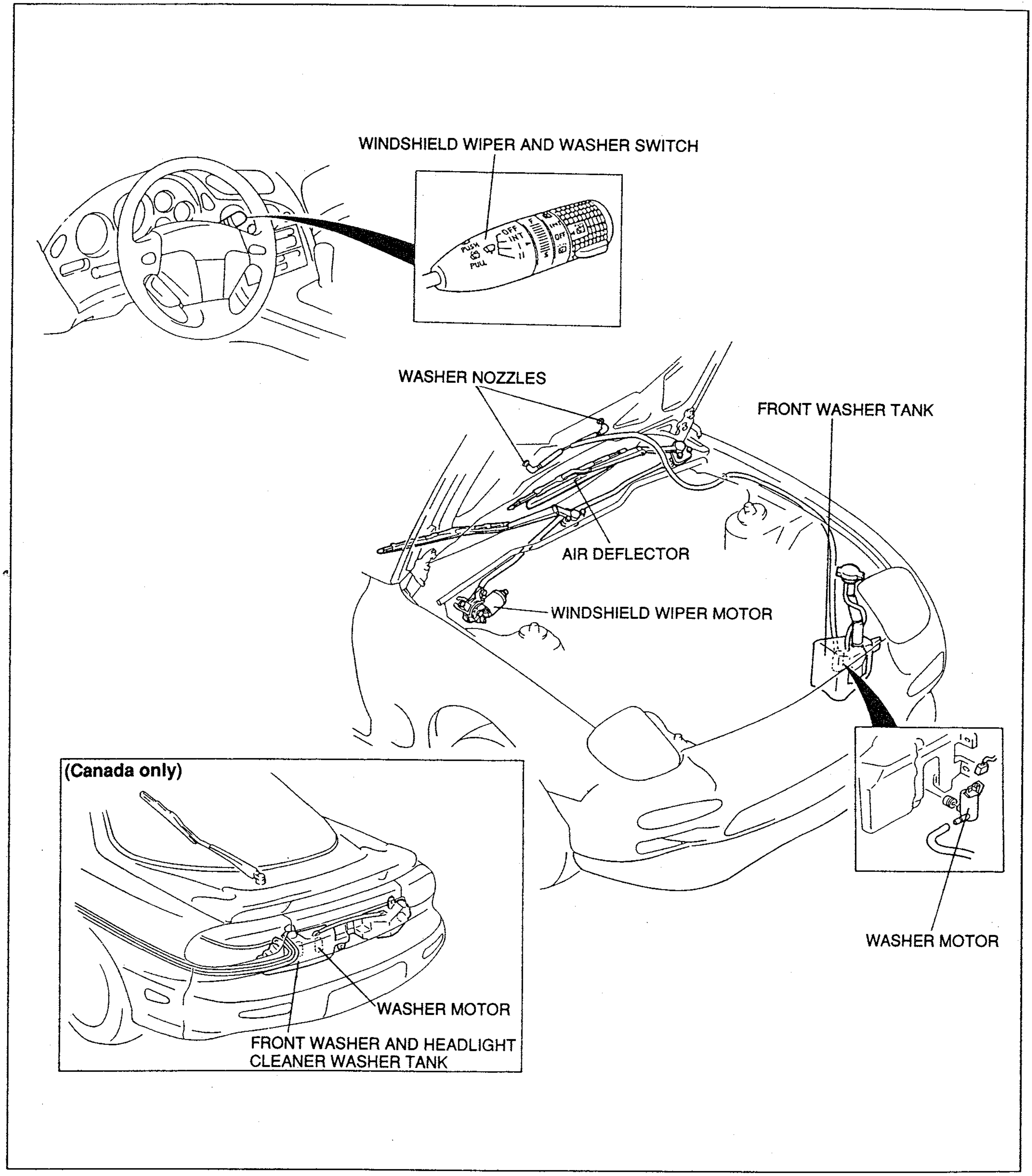

37U0SX-523

- Semiconcealed wipers with one-touch operation and adjustable intermittent operation functions are used for improved marketability.
- An air deflector is fitted to the driver-side wiper blade to prevent it from lifting during high-speed driving.
- Two dual-jet washer nozzles are employed to improve washer performance.
- A syringe-type washer level gauge is incorporated in the front washer tank cap for convenience.

Windshield Wiper Motor
Structural view

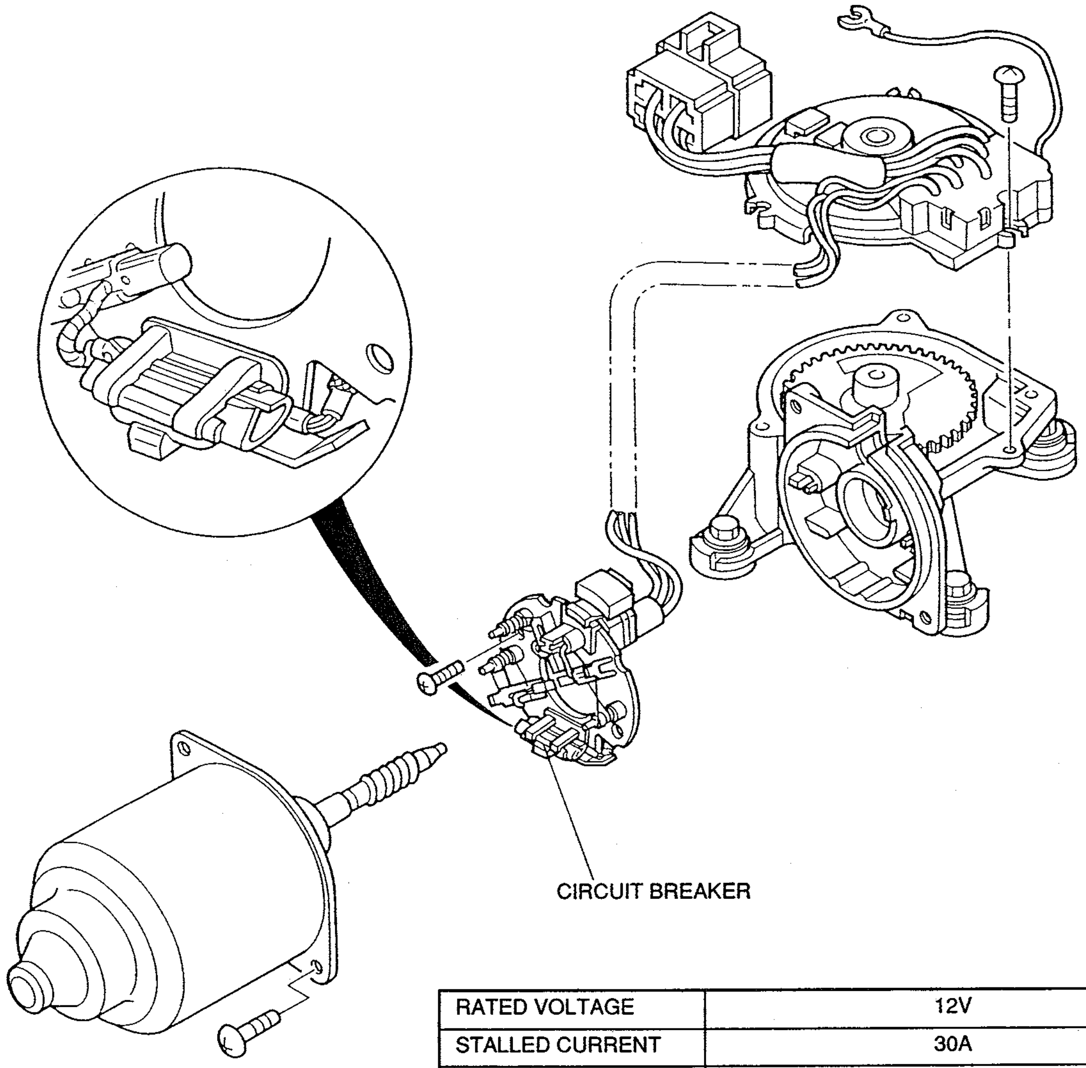

RATED VOLTAGE	12V
STALLED CURRENT	30A
STALLED TORQUE	21—23 N·m {2.1—2.4 kgf·m, 16—17 ft·lbf}
WIPER SPEED	LOW 70—80 rpm HIGH 50—55 rpm

37U0SX-524

The windshield wiper motor contains a built-in circuit breaker for protection.

Circuit breaker purpose
- Prevents wiper motor damage if the motor is prevented from turning, such as when the wiper blades are frozen to the windshield or there is an excessive buildup of snow.
- Prevents excessive wiper motor temperature rise when the wipers are operated under heavy load conditions, such as heavy snowfall.

Circuit breaker operation
- The internal circuit is opened to stop the motor if the motor temperature exceeds approximately 150°C {302°F}.
- The circuit breaker automatically resets and the motor again operates when the temperature drops below approximately 90°C {194°F}.

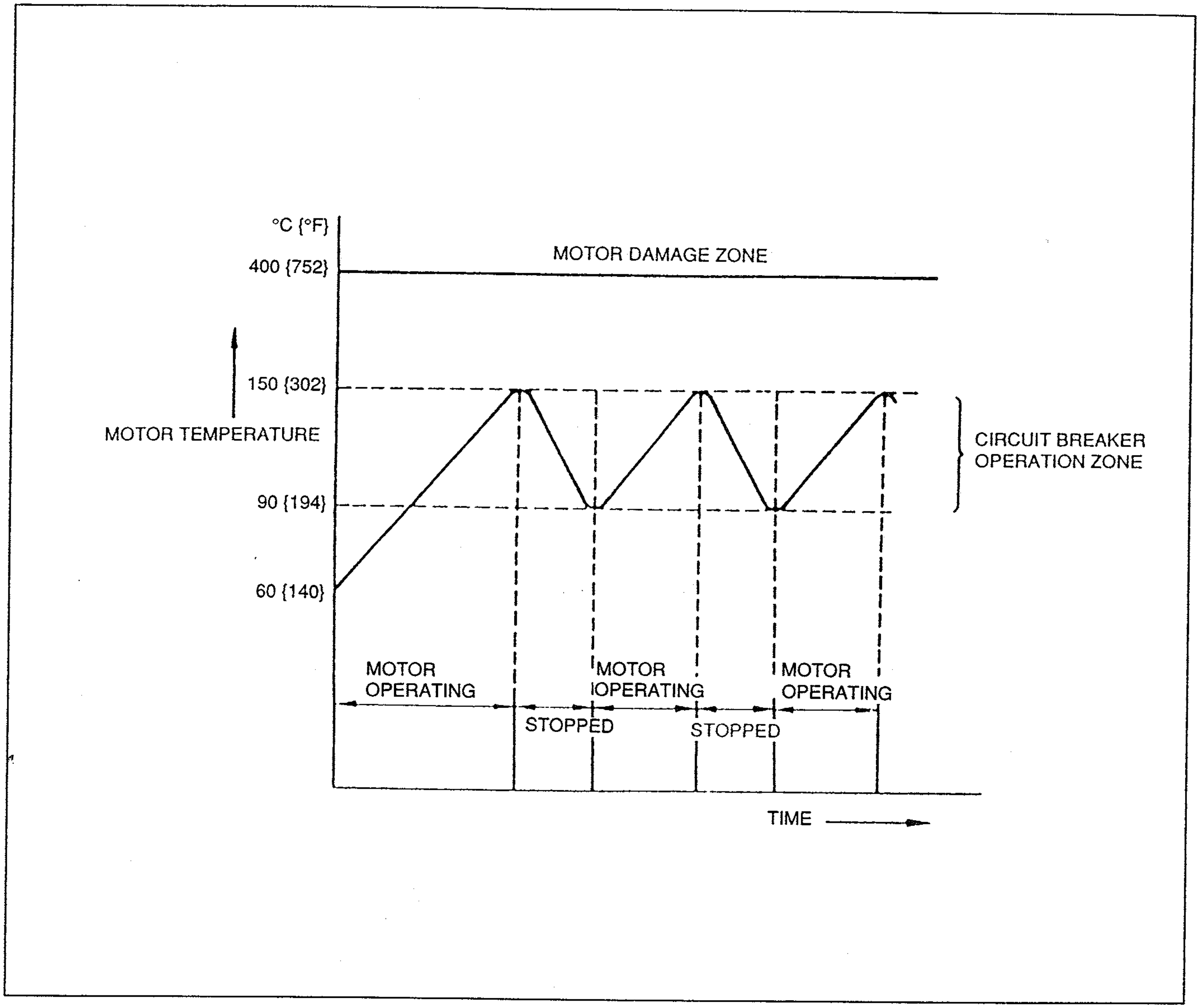

37U0SX-525

Note
- **During heavy load conditions (heavy snowfall, etc.), the circuit breaker may open and momentarily stop operation of the wipers. They will operate again when the circuit breaker resets itself.**

- Wiper blades sometimes stick to the glass when left unused for a long period. If the wiper switch is switched ON in that condition, there will be an excessive flow of current to the wiper motor, possibly causing wiper motor damage. To prevent such an occurrence, the circuit breaker opens to protect the motor and circuit.
- If the wiper switch is turned OFF while the circuit breaker is open, the wipers will automatically return to the park position when the circuit breaker resets.

If wiper motor stops
- If the wiper motor stops while the vehicle is in motion, carefully guide the vehicle to the side of the road and stop. Turn OFF the wiper switch.
- After approximately 5 minutes, turn the wiper switch ON to verify wiper operation. If the wipers operate, the wiper motor is functioning correctly (circuit breaker opened momentarily).
- If the wiper motor does not operate, check the wiper motor circuit. (Refer to the workshop manual.)

Breaker replacement
- If the circuit breaker must be replaced, disassemble the wiper motor and replace the brush plate holder and circuit breaker assembly.

Circuit Diagram

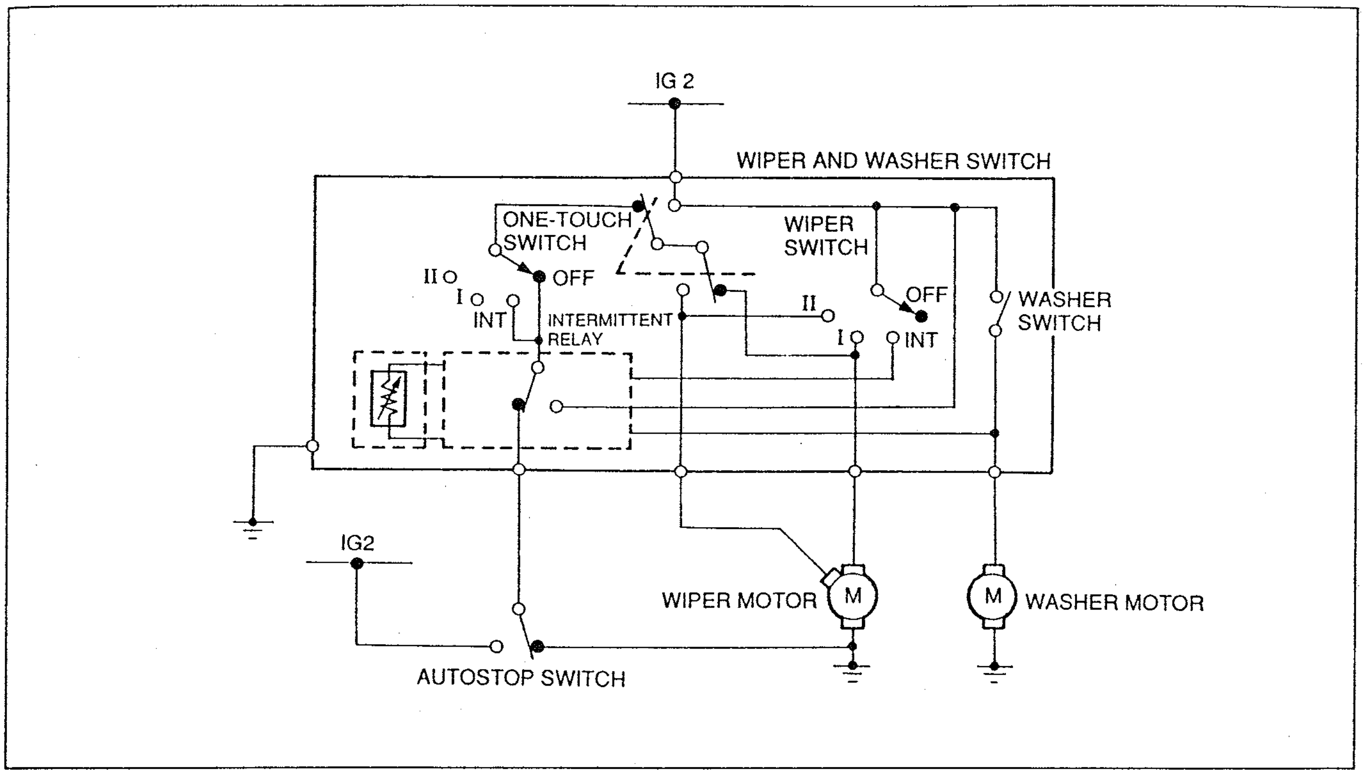

19G0SX-539

System operation

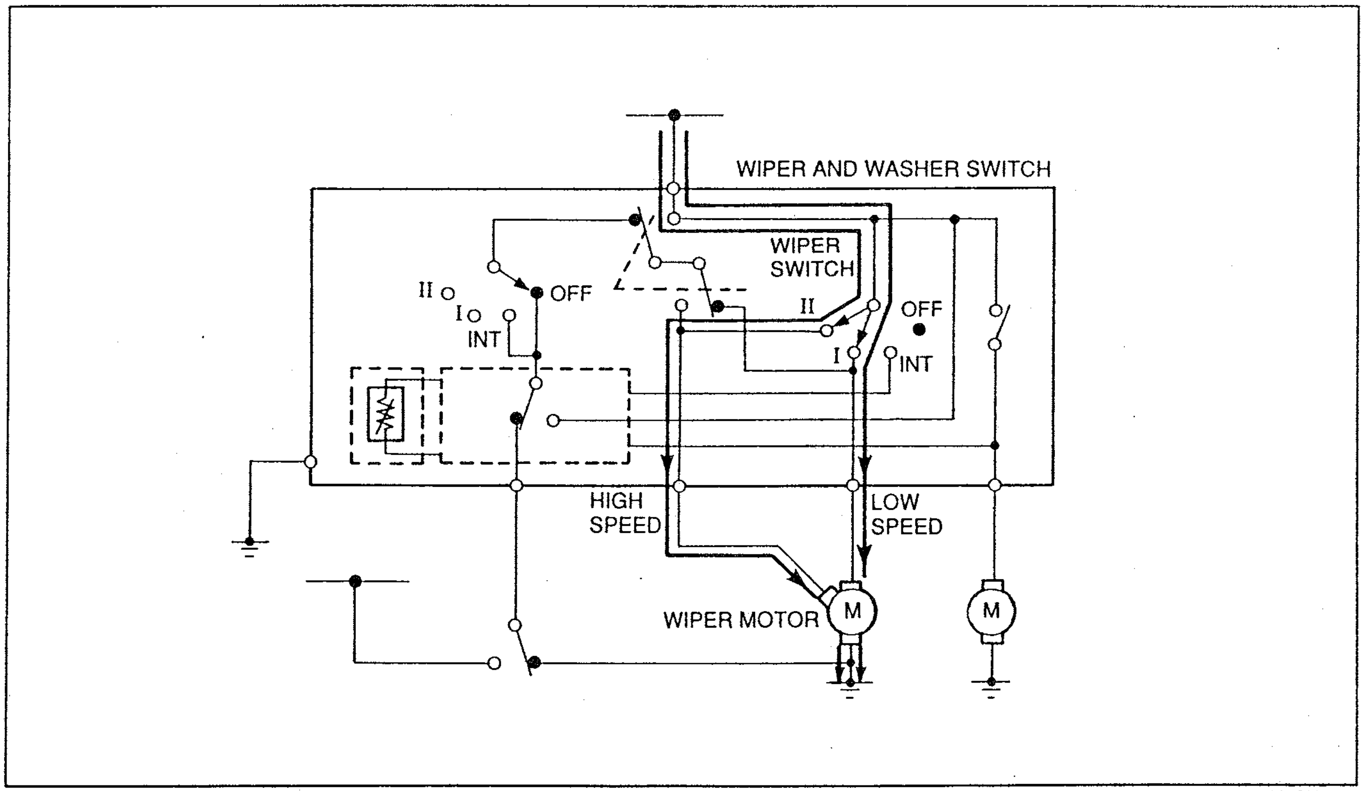

29U0SX-838

1. Low speed and high speed

- When the wiper switch is moved to the I (low) position, current flows through the wiper switch, to the motor, then to ground. The wipers operate at low speed.
- When the wiper switch is moved to the II (high) position, current flows through the wiper switch, to the wiper motor, then to ground. The wipers operate at high speed.

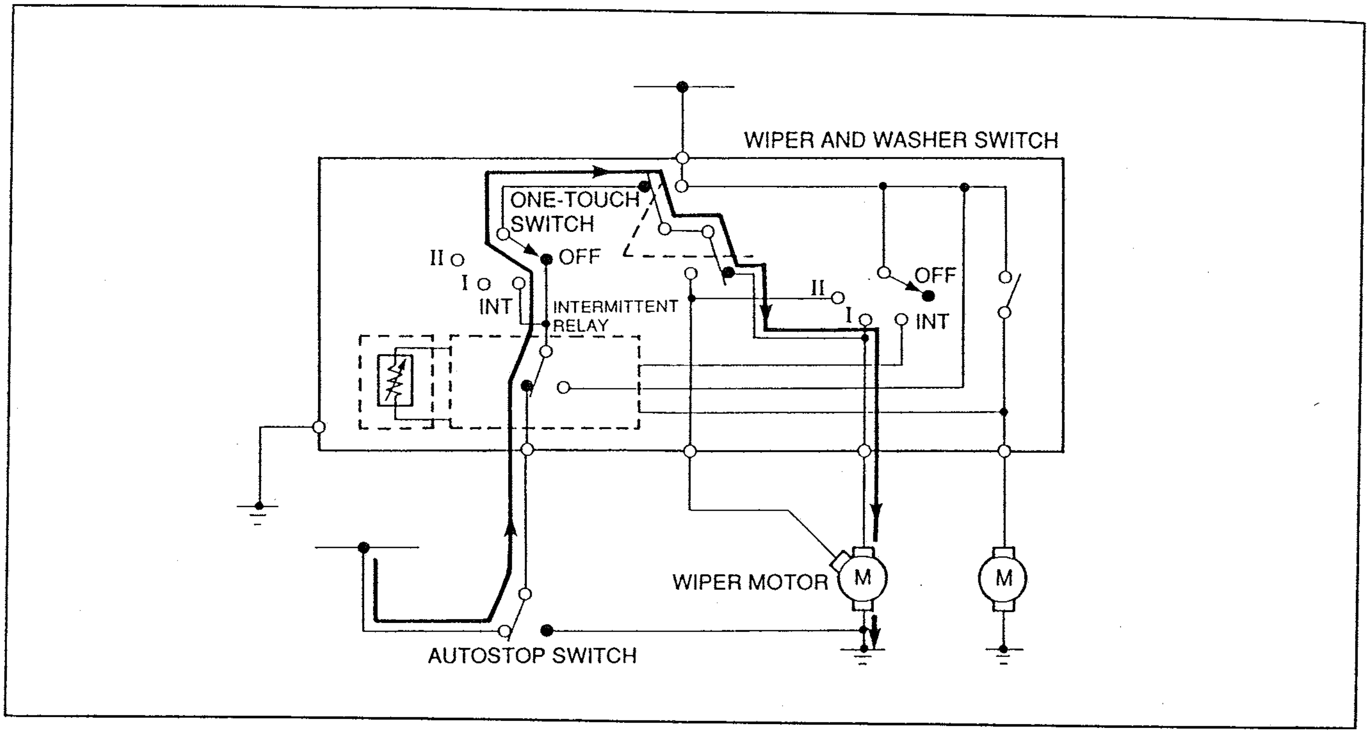

37U0SX-526

2. Autostop

- While the wiper motor is operating, the autostop switch is ON. If the wiper switch is moved to OFF, current continues to flow through the autostop switch, to the intermittent relay, to the one-touch switch, to the wiper motor, then to ground. Thus, the wipers keep moving until they reach the park position.
- When the wipers reach the park position, the autostop switch turns OFF and the wipers stop.

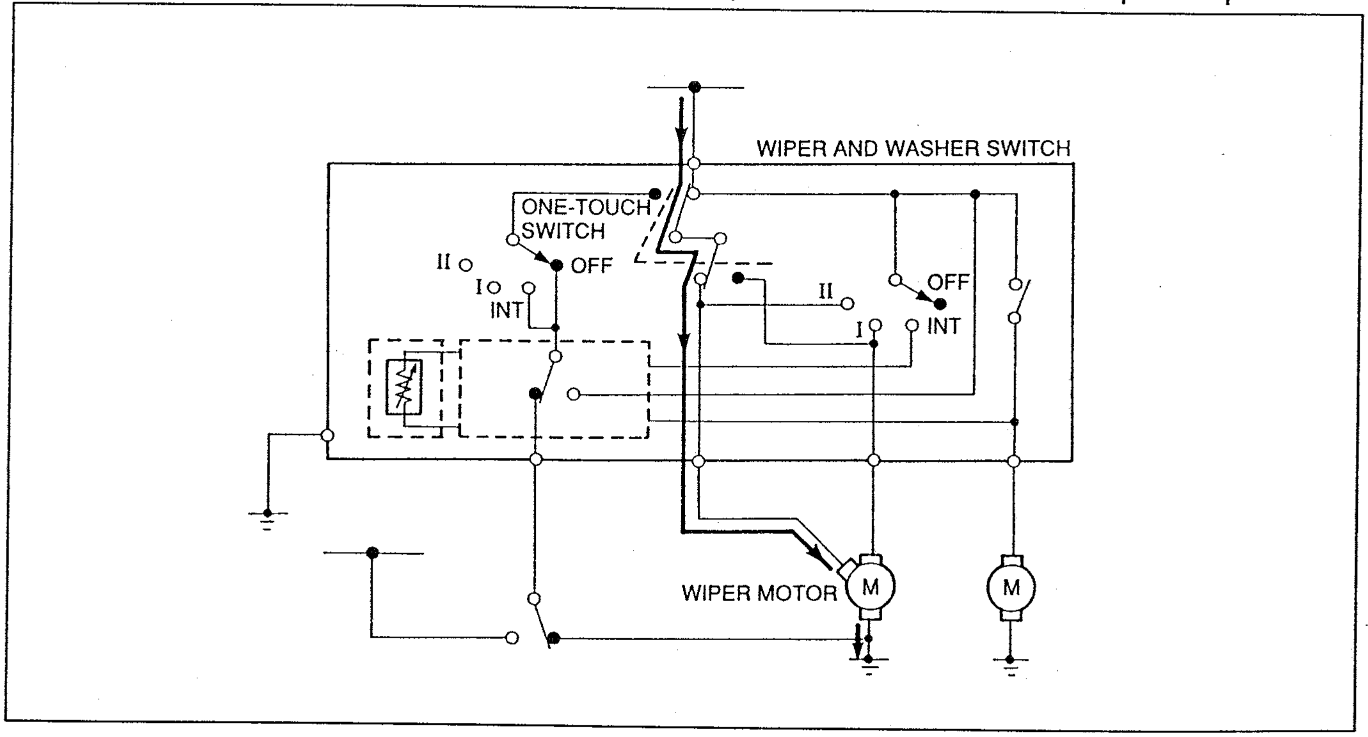

37U0SX-527

3. One-touch wiper

- When the wiper switch is pushed, the one-touch switch turns ON, and current flows through the one-touch switch, to the wiper motor, then to ground. The wipers operate at high speed for one cycle.
- When the wiper switch is pushed and held, the wipers cycle at high speed. When the switch is released, the autostop function is activated and the wipers stop at the park position.

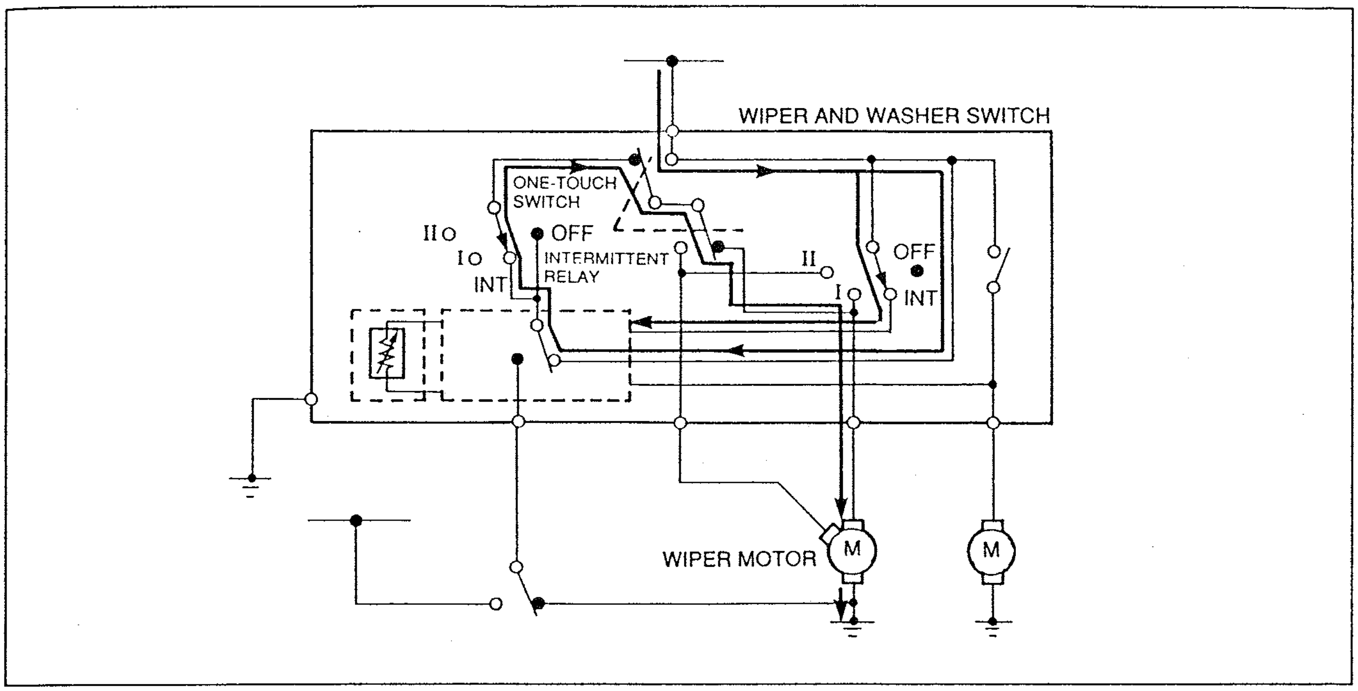

37U0SX-528

4. Intermittent wiper

- When the wiper switch is moved to INT, the intermittent relay turns ON, and current flows through the wiper switch, to the intermittent relay, to the one-touch switch, to the wiper motor, then to ground. The wipers operate at low speed. The intermittent relay internal circuit turns OFF the relay. The autostop function is activated, and the wipers stop at the park position.
- After the wipers stop, discharge from the capacitor inside the relay turns the intermittent relay ON again, and current flows as shown above. The wipers operate again.

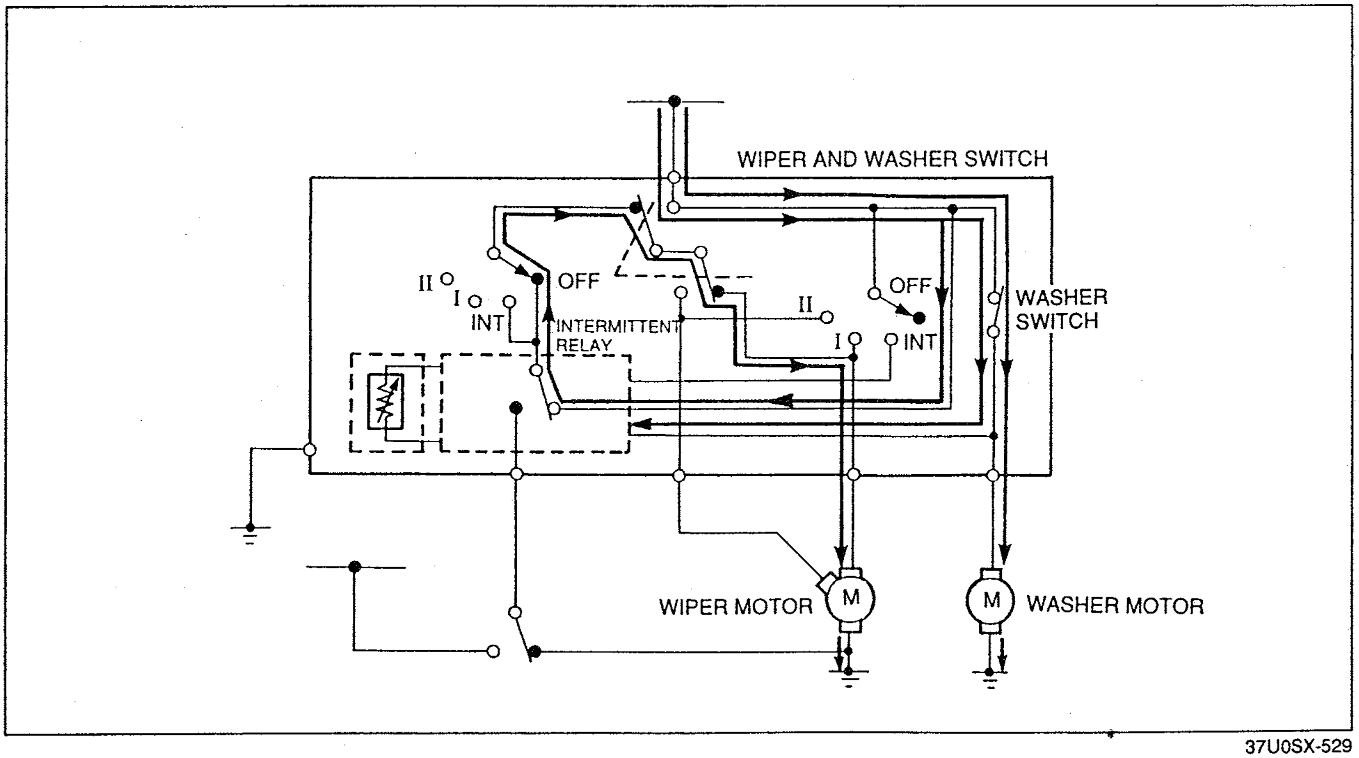

37U0SX-529

5. Washer

- When the wiper and washer switch is pulled, the washer switch turns ON. Current flows through the washer switch, to the washer motor, then to ground. The washer motor is activated.
- Current also flows to the intermittent relay, turning it ON, and continues through the one-touch switch, to the wiper motor, then to ground. The wipers operate at low speed.

REAR WIPER AND WASHER

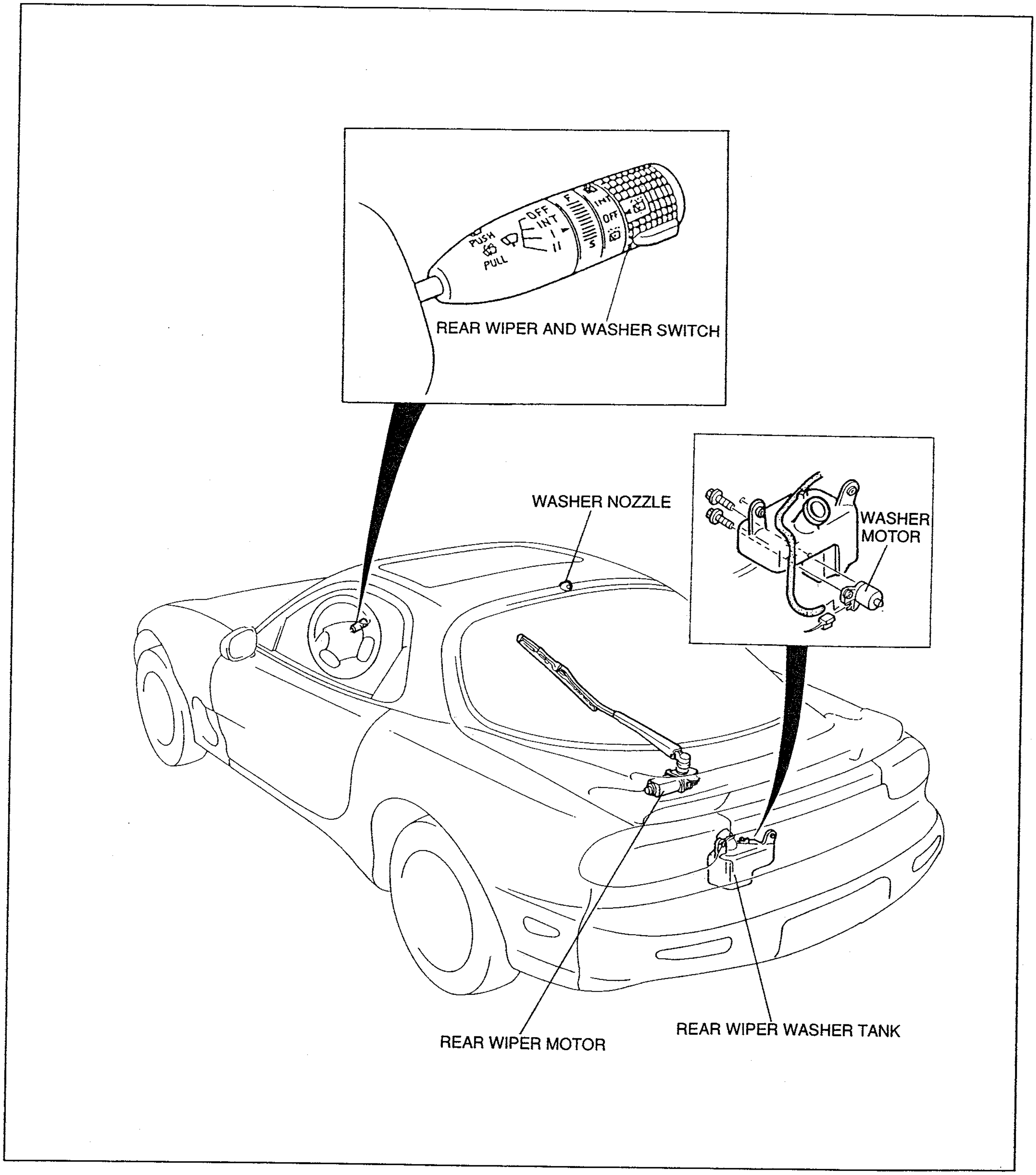

37U0TX-530

- The intermittent rear wiper and washer controls are located on the wiper control lever.
- When the rear wiper switch is turned to the INT position, the rear wiper cycles three times and pauses for 14 seconds, then repeats one cycle each 14 seconds.
- When the rear wiper switch is held in the washer position, washer fluid is sprayed on the glass and the wiper operates. When the switch is released, the wiper cycles two more times and then stops.
- When the rear wiper switch is momentarily turned to the washer position and released, washer fluid is sprayed on the glass and the wiper completes two cycles, then stops.
- The rear wiper is parked vertically for better aerodynamics and easier starting in snowy weather.

System Diagram

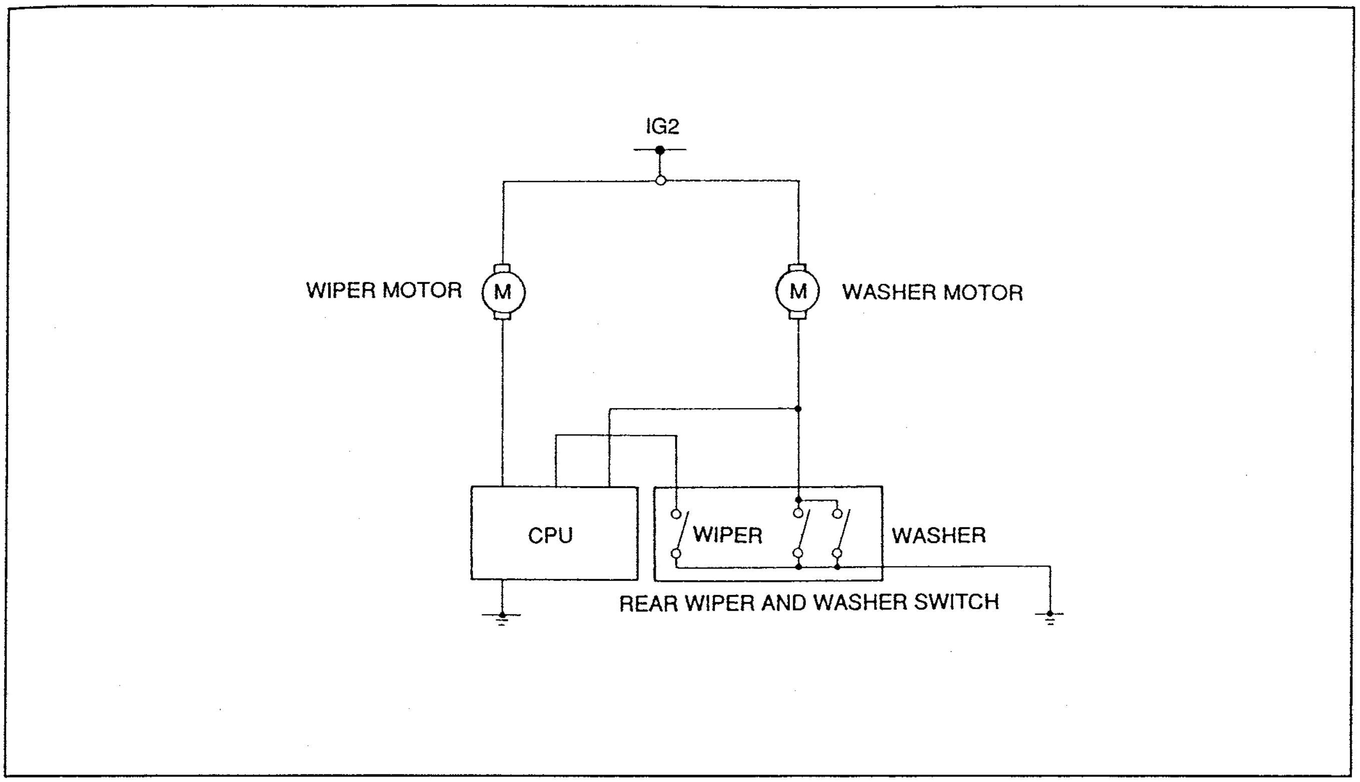

37U0SX-531

System Operation

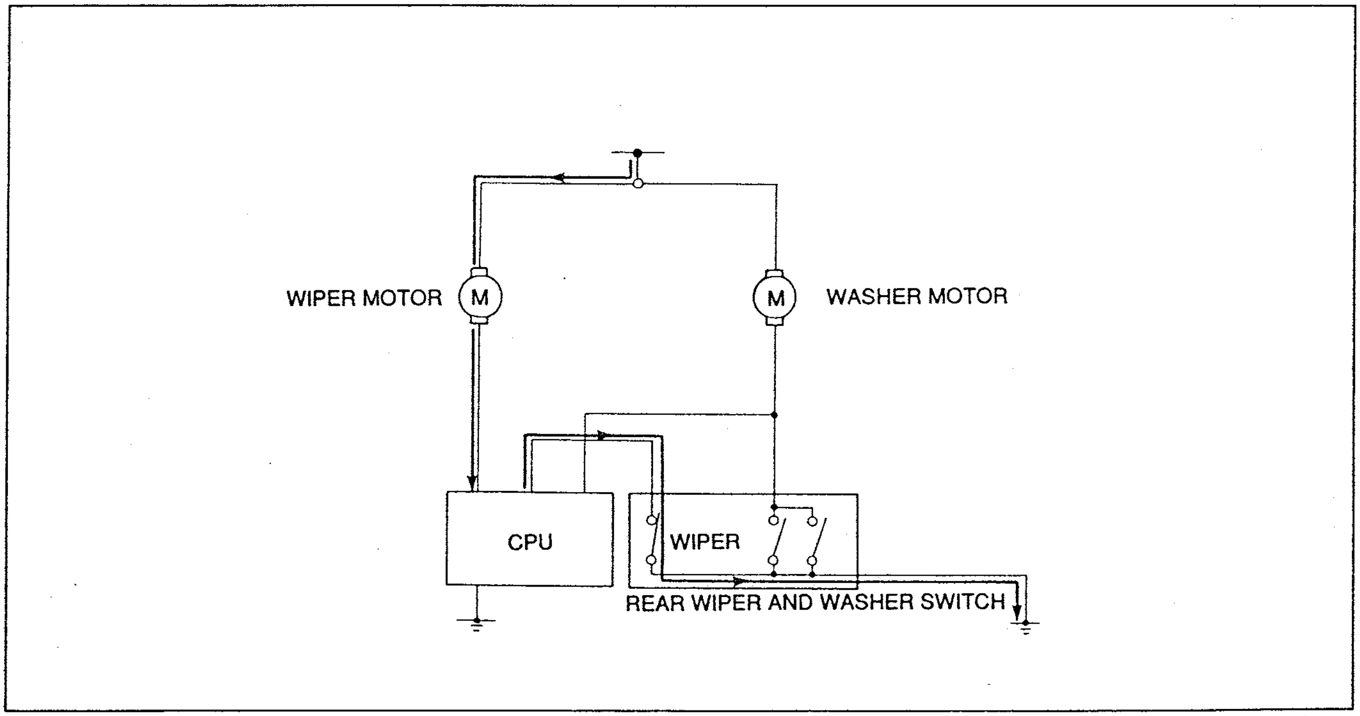

37U0SX-532

1. Rear wiper

- When the rear wiper switch is turned ON, current flows through the rear wiper motor, to the CPU, to the rear wiper switch, then to ground, activating the rear wiper motor.
  After three cycles, the rear wiper is turned OFF by the CPU.
- After the rear wiper stops, discharge from the capacitor within the CPU turns ON the CPU. Current flows as described above and the wiper operates again. Charging and discharging of the capacitor continues and the wiper cycles once every 14 seconds.

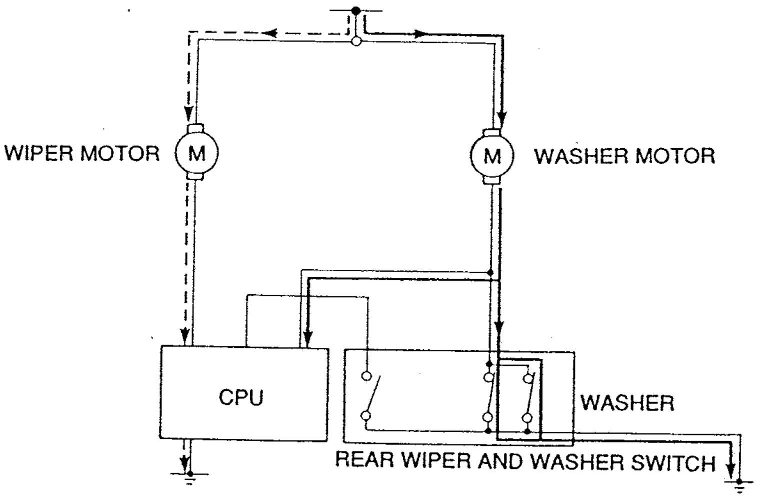

37U0SX-533

2. Rear washer

- When the rear washer switch is turned ON, current flows through the rear washer motor, to the rear washer switch, then to ground, activating the rear washer motor.
  At the same time, current flows through the CPU and turns it ON.
- Because the CPU is ON, current flows through rear wiper motor, and the rear wiper motor operates.

HEADLIGHT CLEANER

STRUCTURAL VIEW

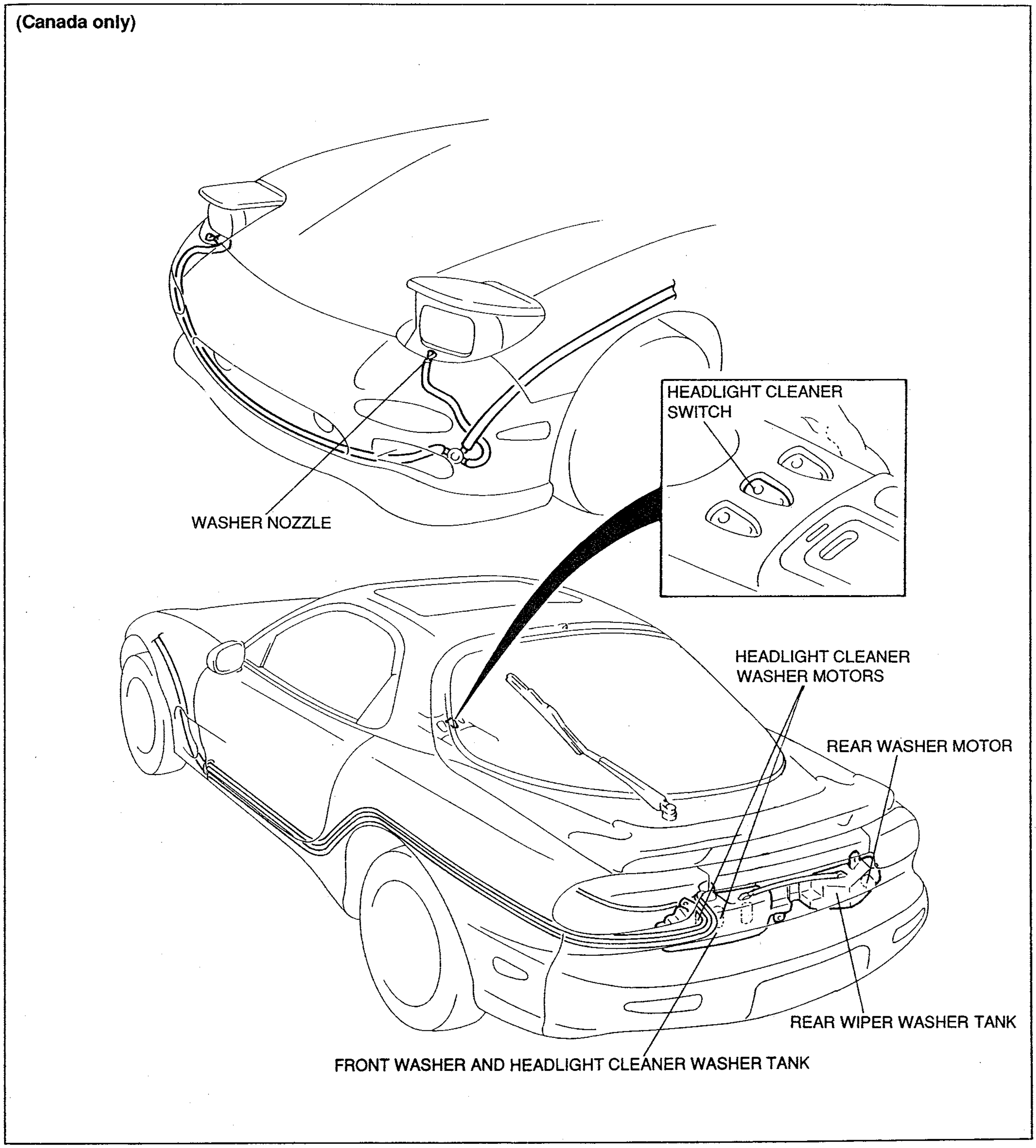

37U0SX-534

- A headlight cleaner system is optionally available for improved safety.
- The system shares the washer fluid reservoir with the rear washer, but each system has its own motors.

Specifications

	CAPACITY OF TANK liters {US qt, Imp qt}
WITH HEADLIGHT CLEANER	5.2 {5.4, 4.5}

SLIDING SUNROOF

STRUCTURAL VIEW

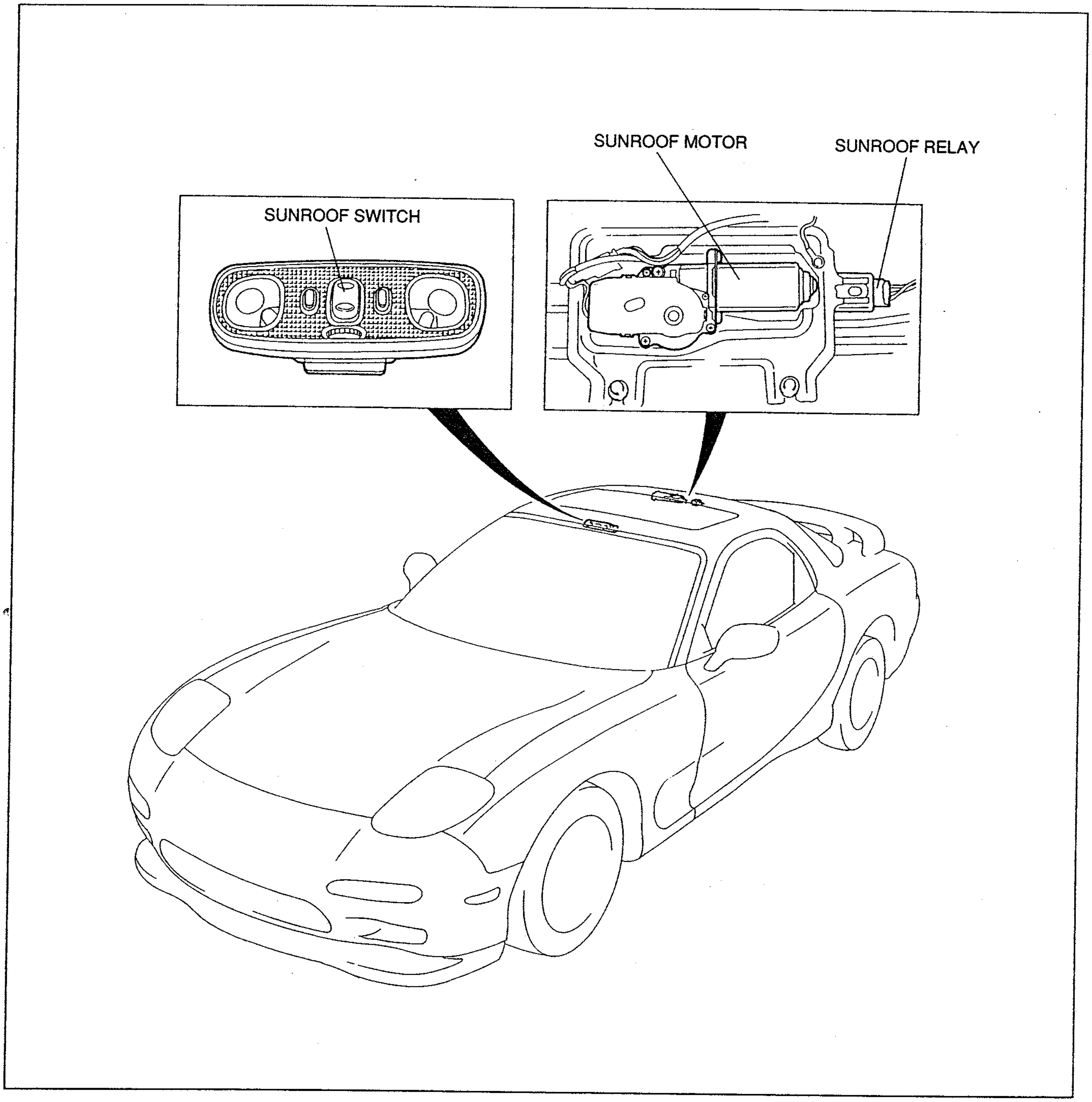

37U0SX-535

- Because of limited space, an external sliding sunroof is installed.

Specifications

Functions		Tilt-up, slide open, close
Actual opening		242 × 724 mm {9.5 × 28.5 in}
Tilt amount		27—30 mm {1.1—1.2 in}
Slide amount		292—298 mm {11.5—11.7 in}
Operation time	Tilt-up	2 sec (max.)
	Slide	4—6 sec

Mechanism

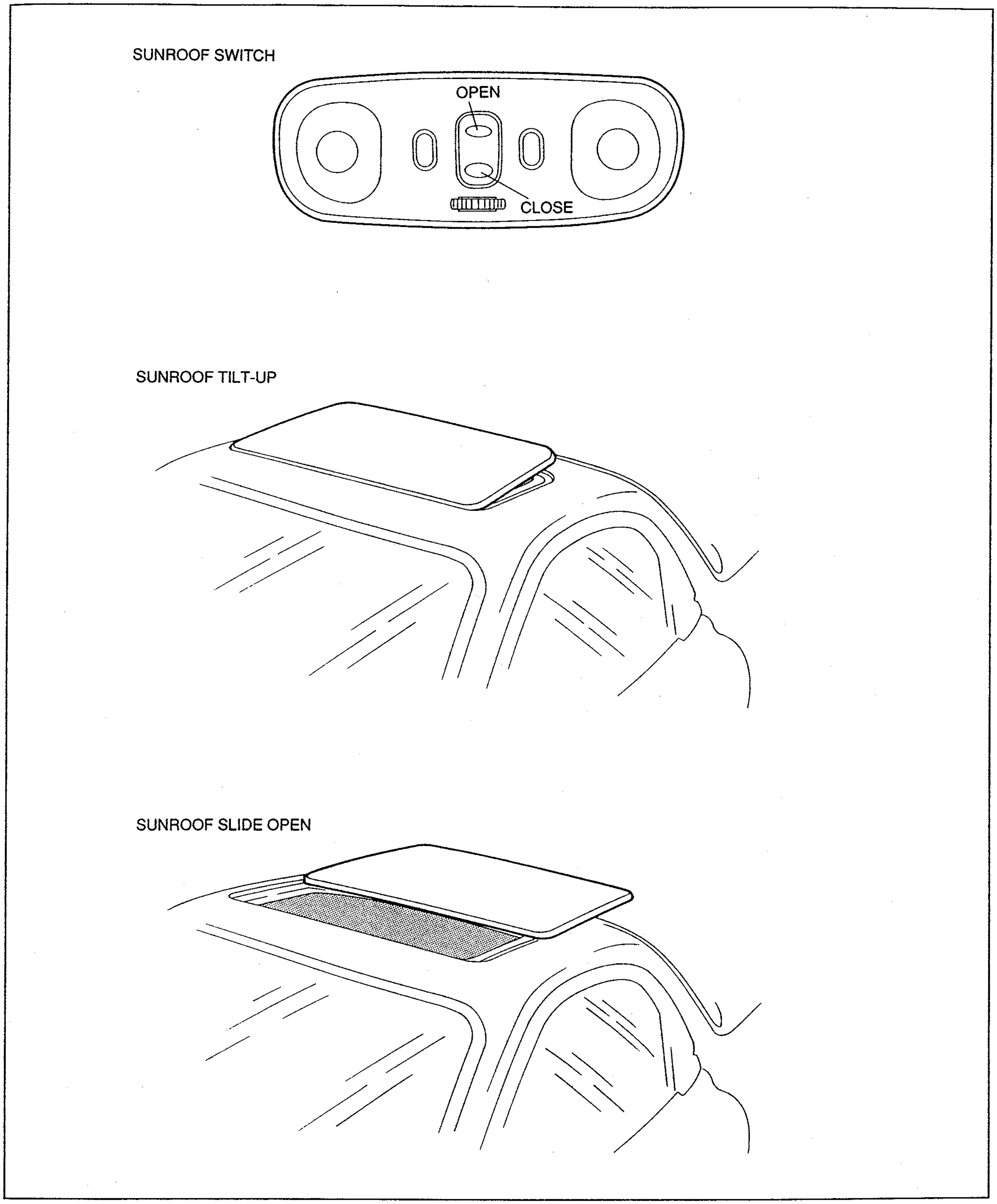

37U0SX-536

- When the back of the sunroof switch is pressed, the sunroof tilts up and stops. When the switch is released and pressed again, the sunroof slides open.
- When the front of the sunroof switch is pressed with the sunroof tilted up, the sunroof closes. When the front of the switch is pressed with the sunroof fully open, the sunroof slides closed without stopping at the tilt-up position.

Drive Mechanism

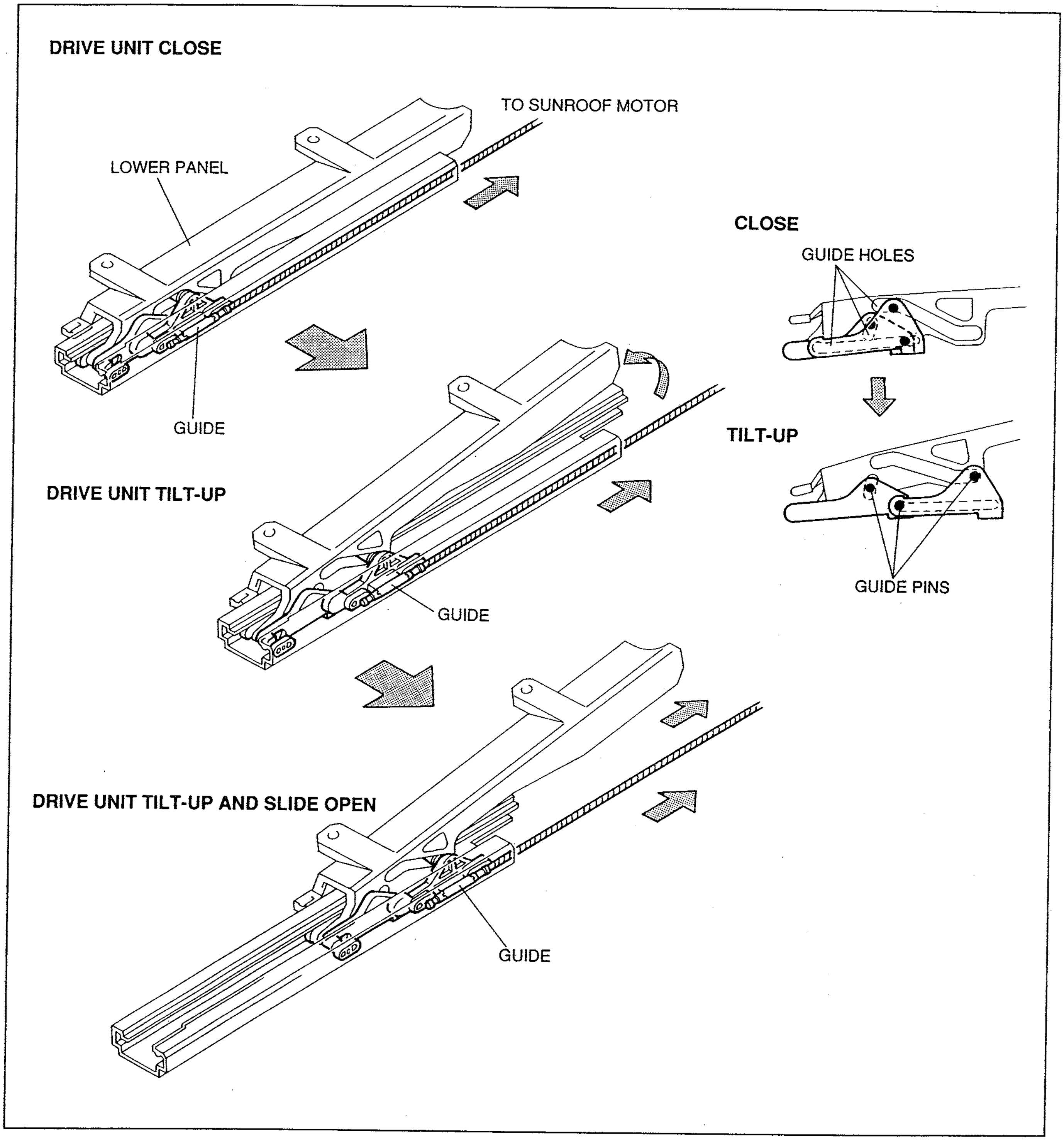

37U0SX-537

Drive Unit Tilt-Up and Slide Open

- When the back of the sunroof switch is pressed, the sunroof motor rotates, moving the slider guide pins backward in the guide holes of the lower panel. The lower panel is raised and the slide panel is tilted up. The slide panel is stopped by the limit switch motor.
- If the back of the sunroof switch is pressed again with the slide panel tilted up, the sunroof motor will rotate again, moving the slide panel backward until the sunroof is fully open.

Drive Unit Close

- When the front of the sunroof switch is pressed with the sunroof fully open, the sunroof motor reverses its rotation. The slider guide pins move forward in the guide holes of the lower panel, and the opposite of open movement occurs.

Drain Construction

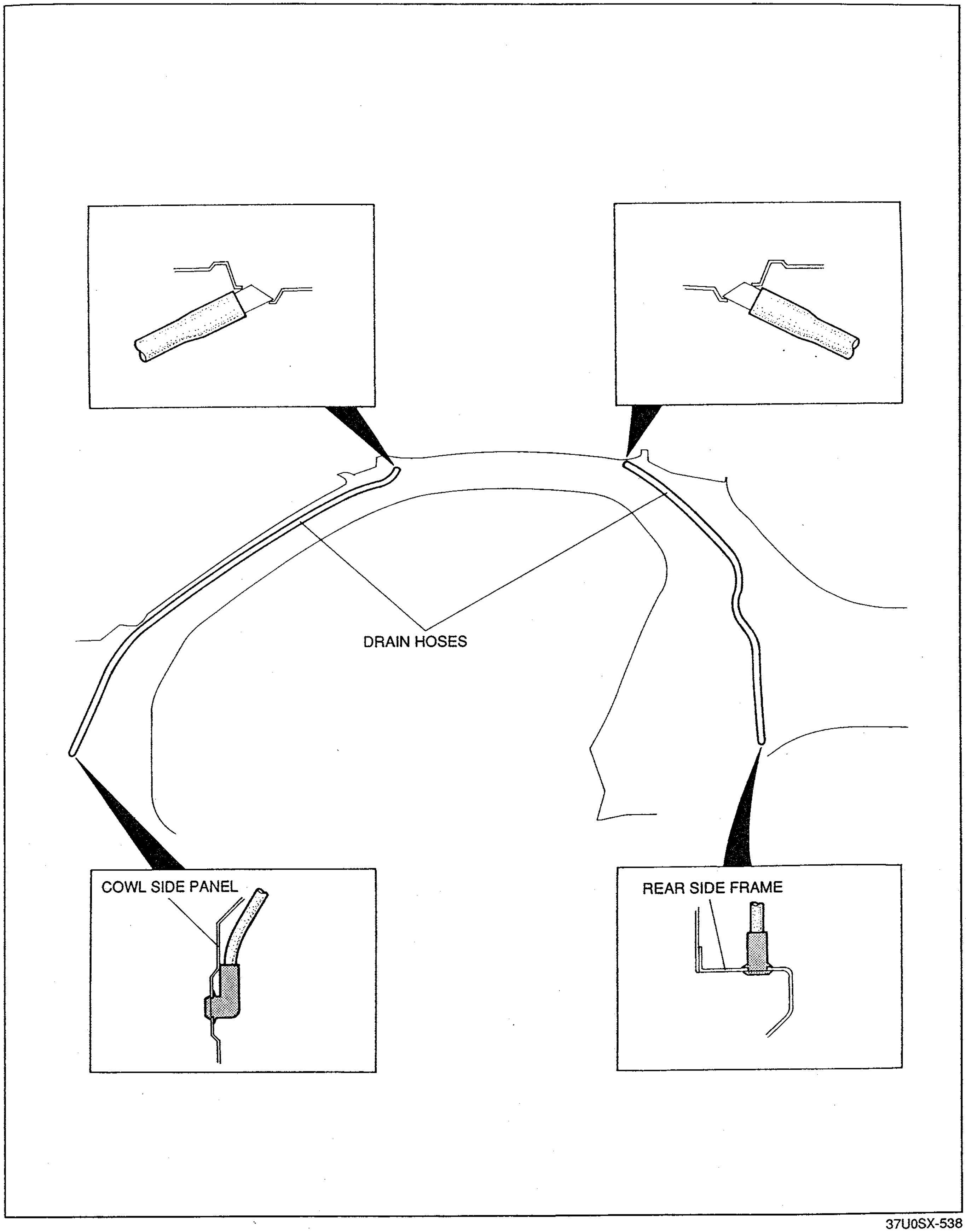

37U0SX-538

- A drain hose is located at each corner of the sunroof frame. Water drains out either through the A-pillars to the cowl side panel or through the B-pillars to the rear side frame.

Circuit Diagram

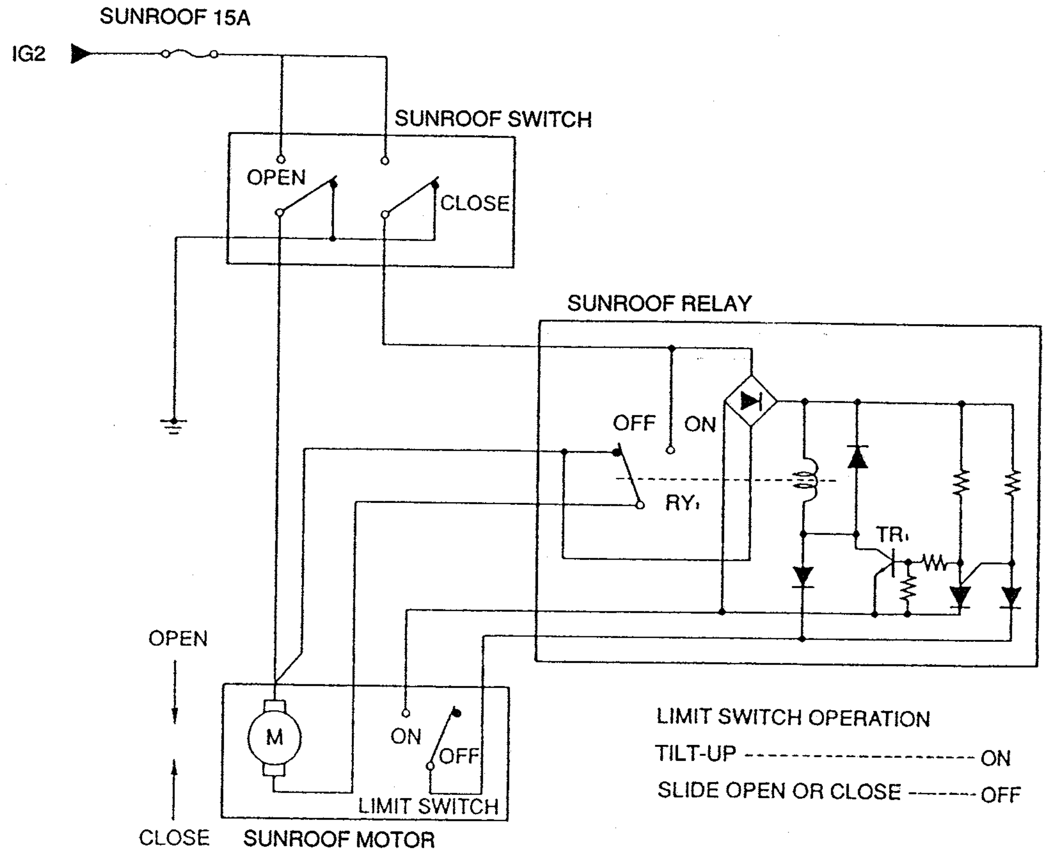

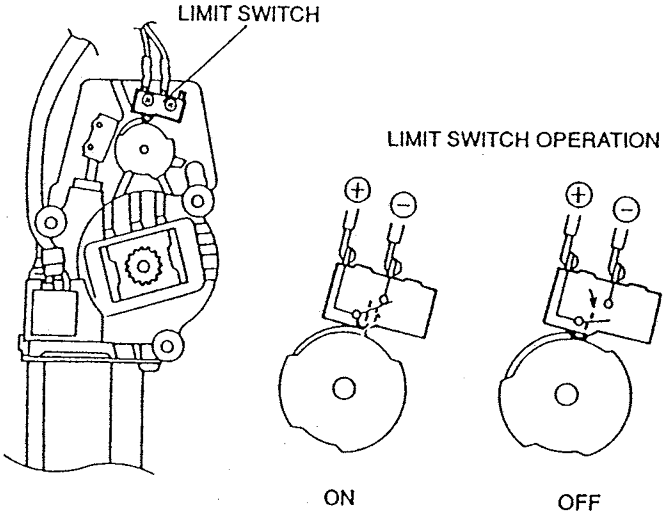

System Operation

Sunroof switch operation

1. Tilt-up

- The sunroof motor limit switch is ON.
- When the back of the sunroof switch is pressed, current (1) flows to coil RY₁ and turns the RY₁ switch ON. Current (2) also flows. The sunroof motor rotates, and the slide panel tilts up.
- After the slide tilts up, the limit switch in the sunroof motor turns OFF, stopping current flow and the sunroof motor.

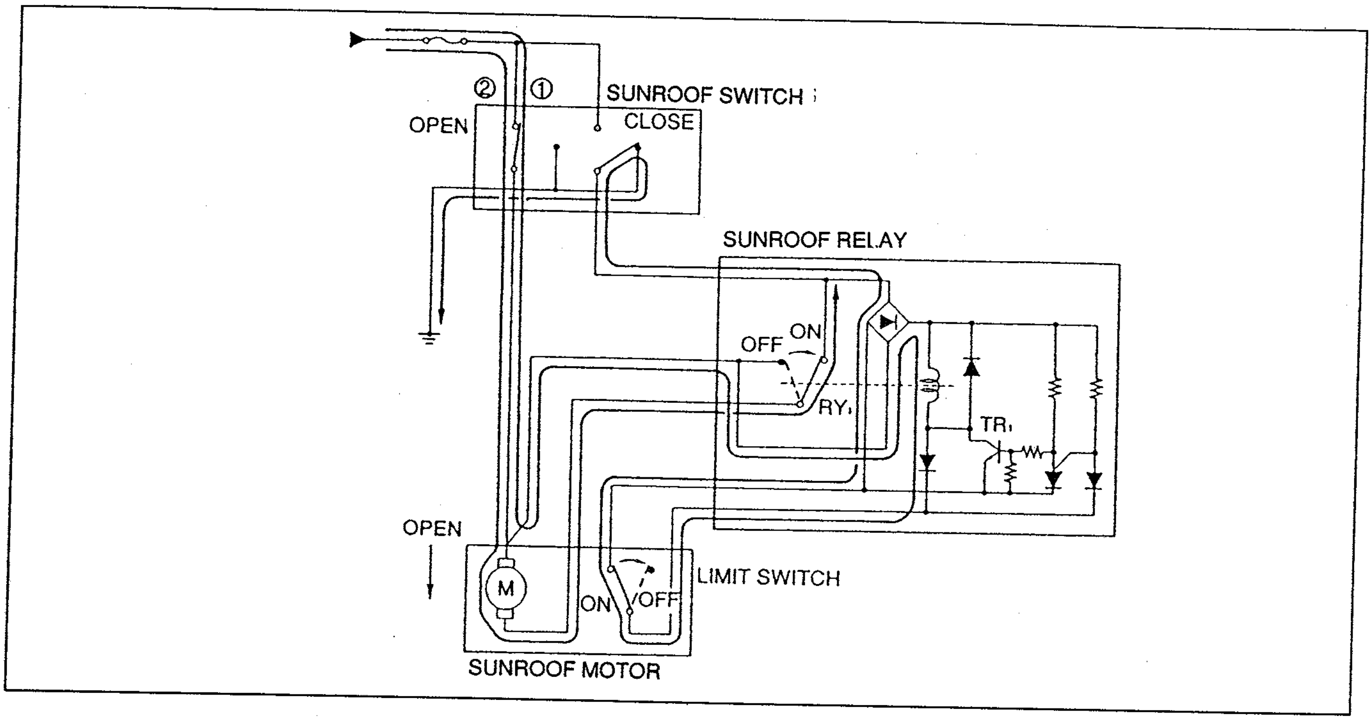

37U0SX-539

2. Slide open

- The sunroof motor limit switch is OFF.
- When the back of the sunroof switch is pressed with the slide panel tilted up, current (3) flows to coil RY₁ and transistor TR₁, turning the RY₁ switch ON. Current (4) then flows, causing the sunroof motor to rotate. The tilted-up slide panel opens.

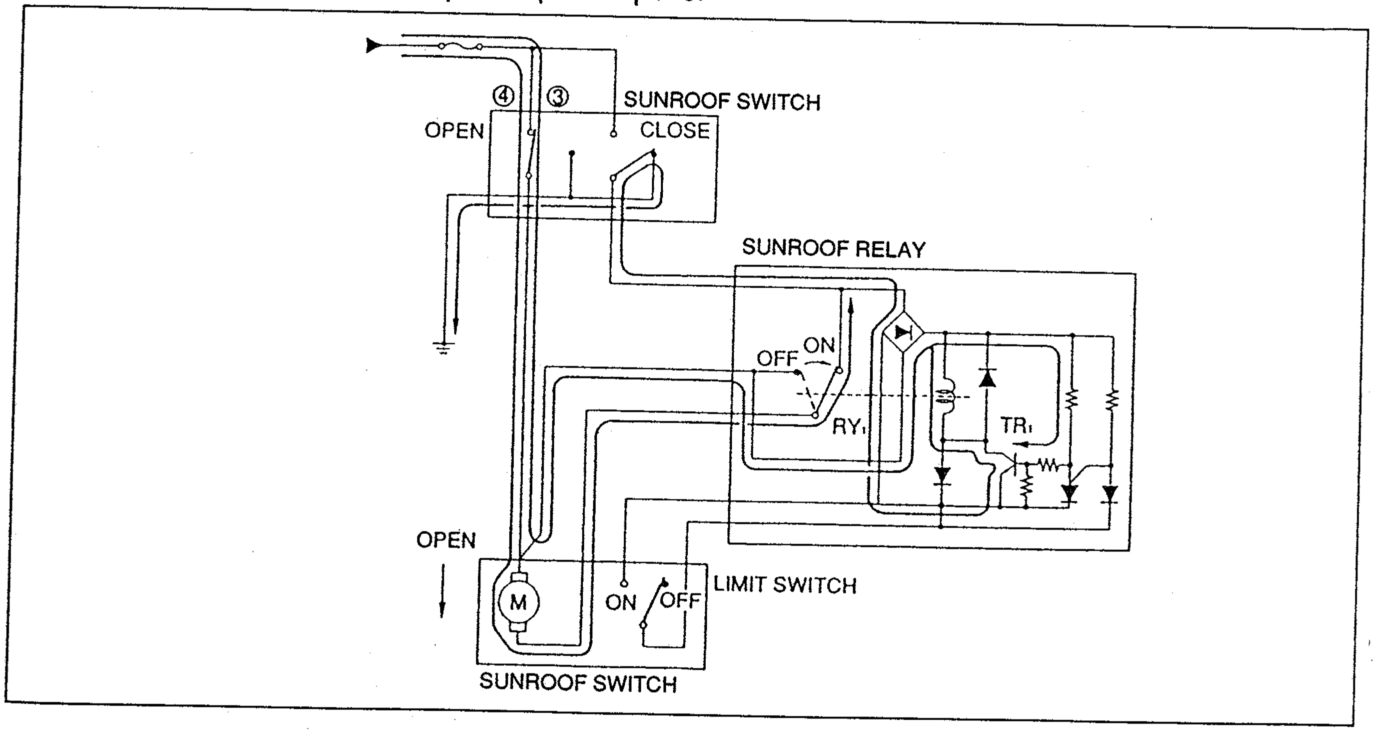

37U0SX-540

3. Close

- The sunroof motor limit switch is OFF.
- When the front of the sunroof switch is pressed with the slide panel tilted up open, current (5) flows to coil RY_1 and transistor TR_1, turning the RY_1 switch ON. Current (6) then flows, causing the sunroof motor to rotate. The sunroof panel closes.
- After the sunroof closes, the limit switch turns ON again.

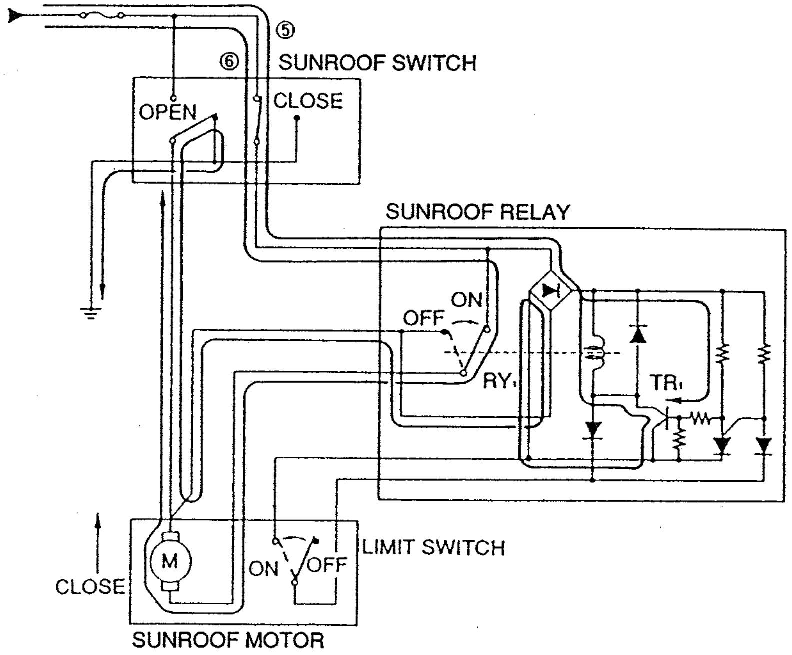

37U0SX-541

POWER DOOR LOCK SYSTEM

OUTLINE

- Power door locks are available for added security and convenience.
- Both doors can be conveniently locked from the driver's side by the door key or lock knob.
- A door lock switch is used in the driver-side door lock assembly; a door lock actuator is used on the passenger-side.

Function

System	Operation	Illustration
Door key interlock function	By locking or unlocking the driver door, both doors automatically lock or unlock.	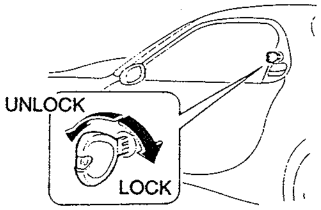
Door lock knob interlock function	By pressing or lifting the driver-side door lock knob, both doors automatically lock or unlock.	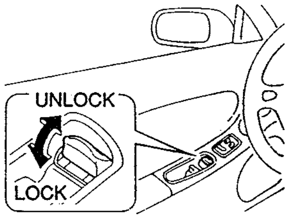

37U0SX-542

STRUCTURAL VIEW

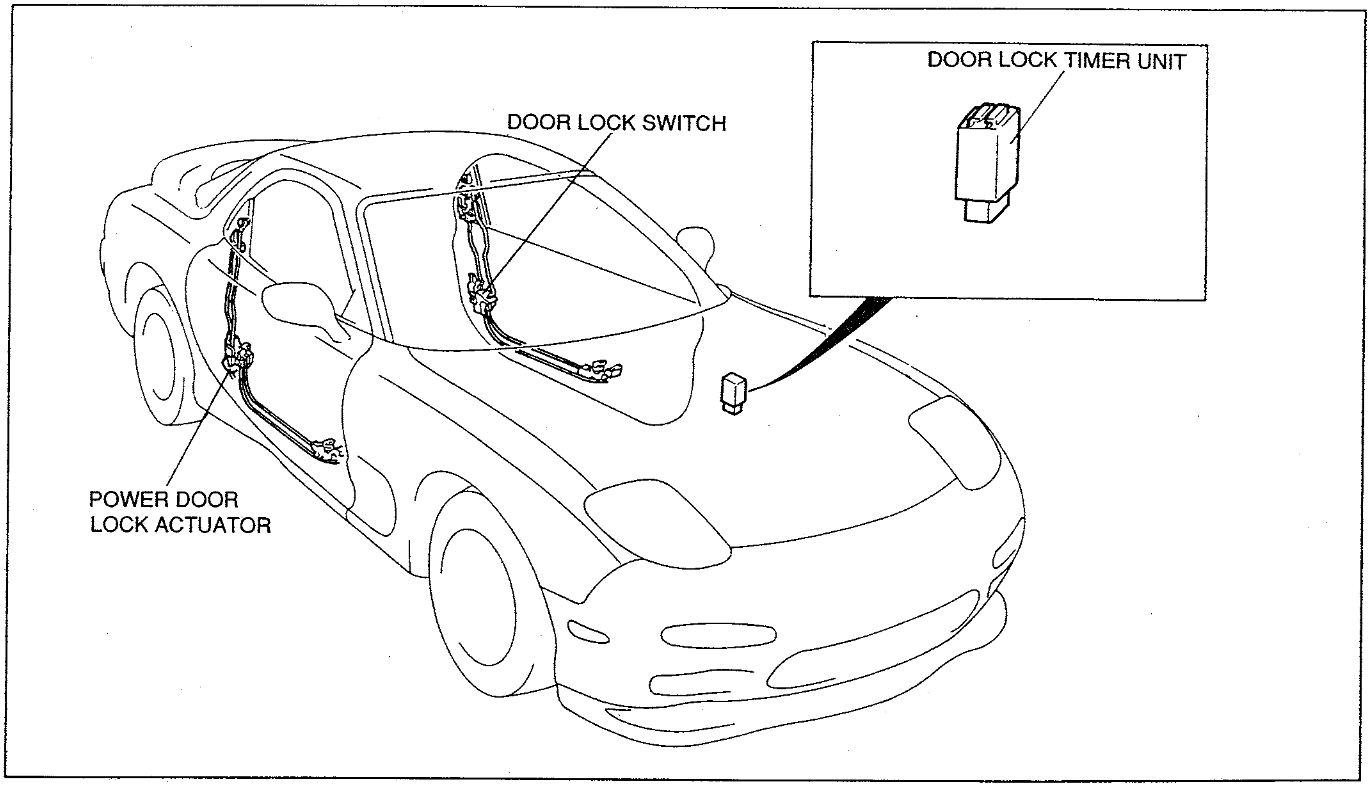

1PE0SX-526

Specifications (Door Lock Actuator)

Rated voltage	12V	Operating time	0.5 sec (max.)
Stalled current	7A (max.)		

Circuit Diagram

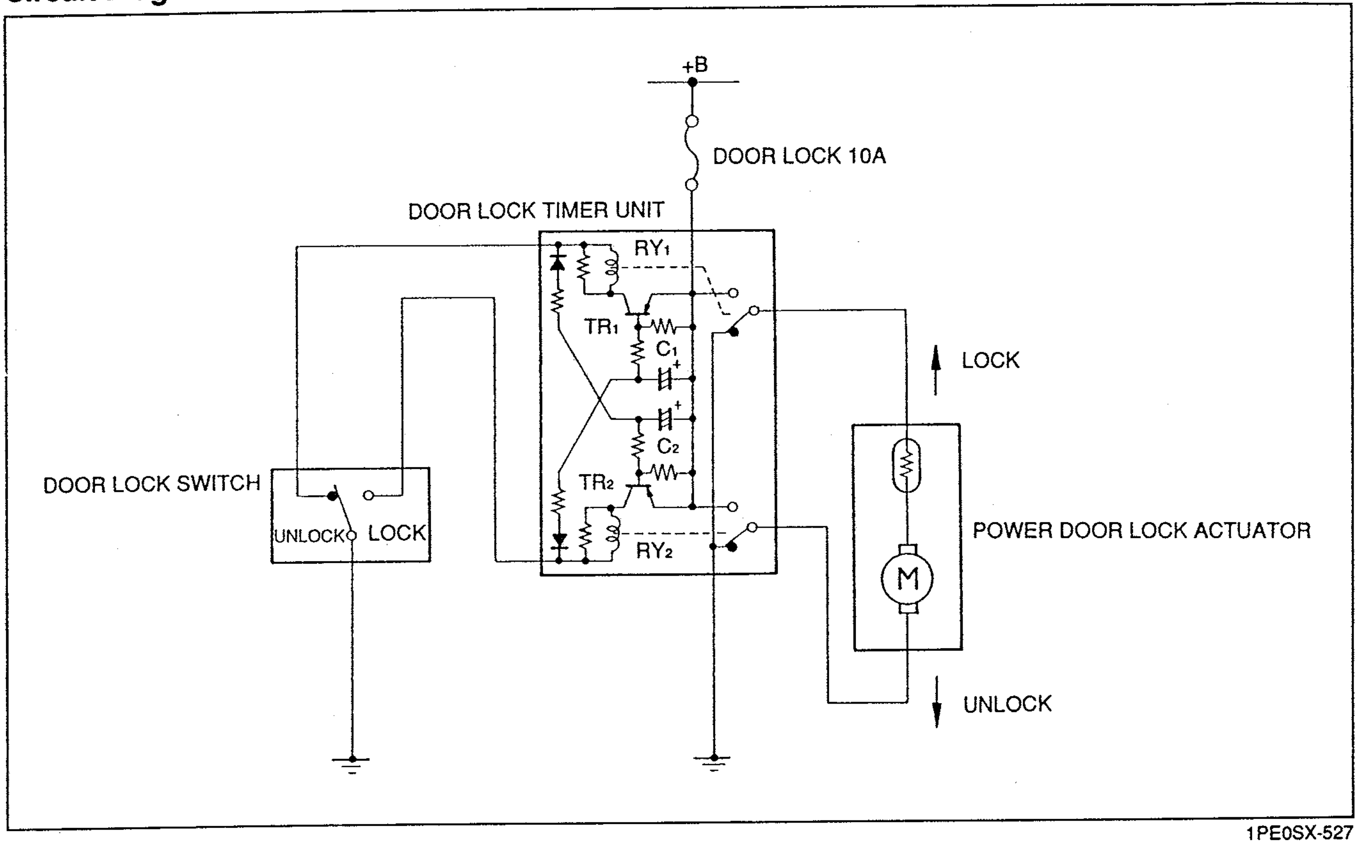

1PE0SX-527

System Operation

1. Locked condition

- When the door lock switch is in the LOCK position, current (1) flows through condenser C_1 of the door lock timer unit to ground.

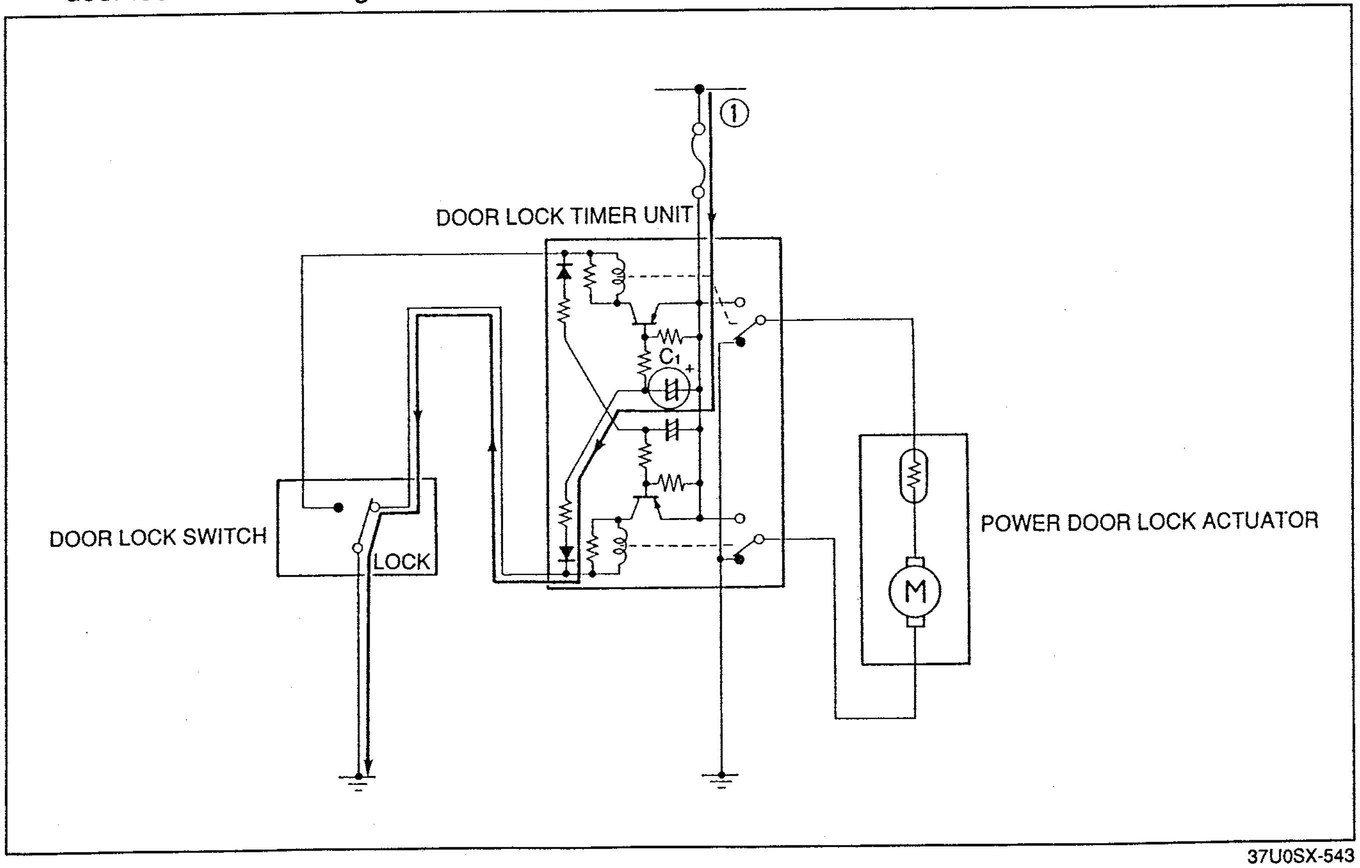

37U0SX-543

2. Operation from locked to unlocked

- When the door lock switch is moved to the UNLOCK position, condenser C_1 discharge current (2) turn ON transistor TR_1. Current (3) turns ON relay RY_1, and current (4) activates the power door lock actuator.
- Current (5) fully charges condenser C_2.

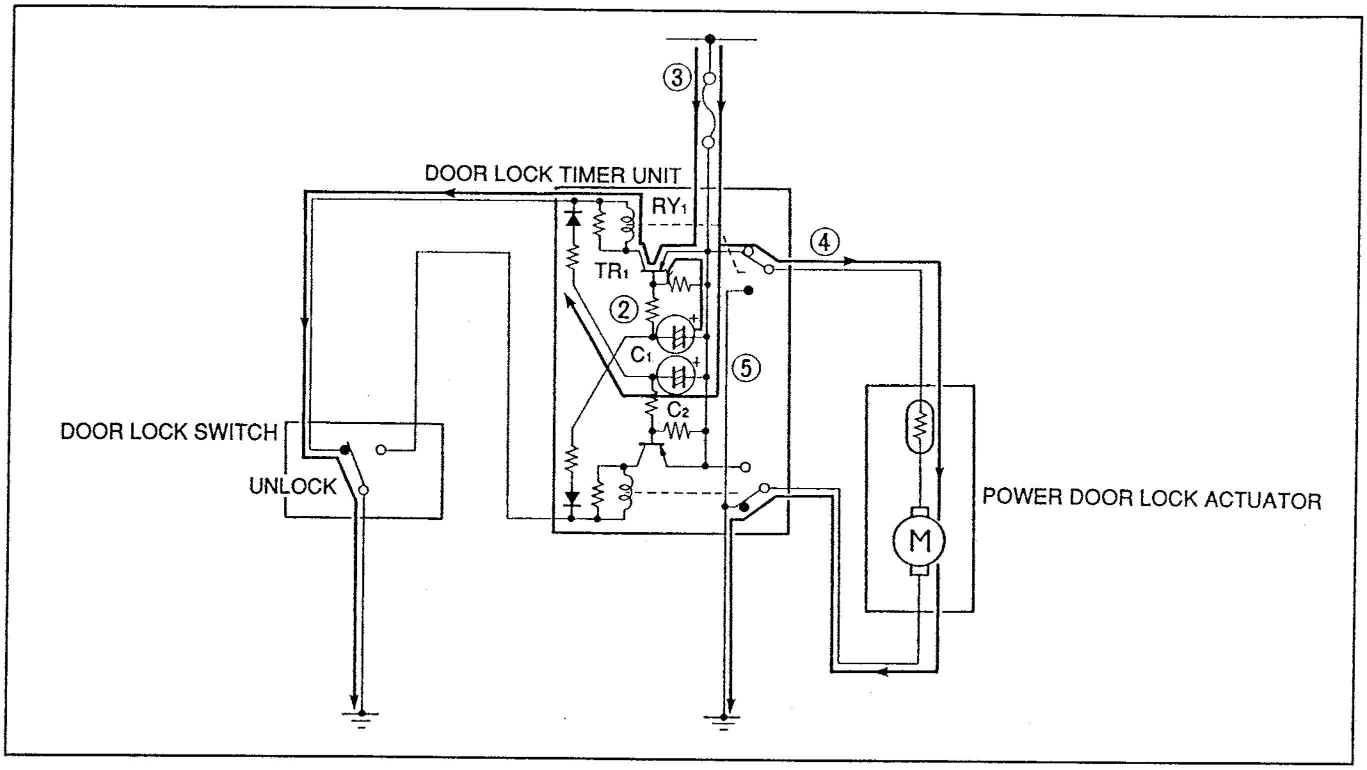

37U0SX-544

3. Operation from unlocked to locked

- When the door lock switch is moved from the UNLOCK to the LOCK position, condenser C_2 discharge current (6) turn ON transistor TR_2. Current (7) turns ON relay RY_2, and current (8) activates the door lock actuator.

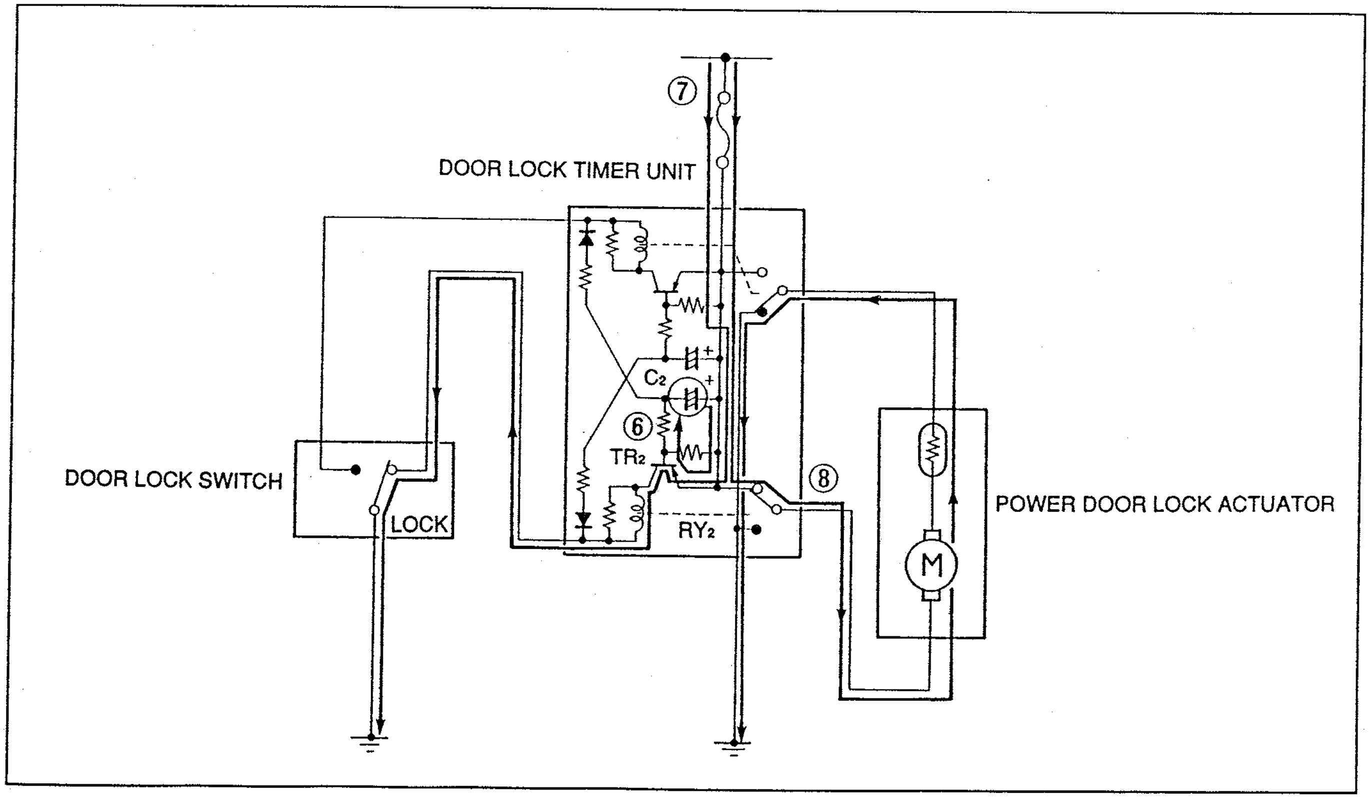

37U0SX-545

POWER WINDOW SYSTEM

OUTLINE

- The main switch assembly is installed on the driver-side door. A subswitch is located on the passenger door.
- The main switch assembly includes driver-side and passenger-side control switches and a power-cut switch, which controls power to the passenger-side subswitch.

STRUCTURAL VIEW

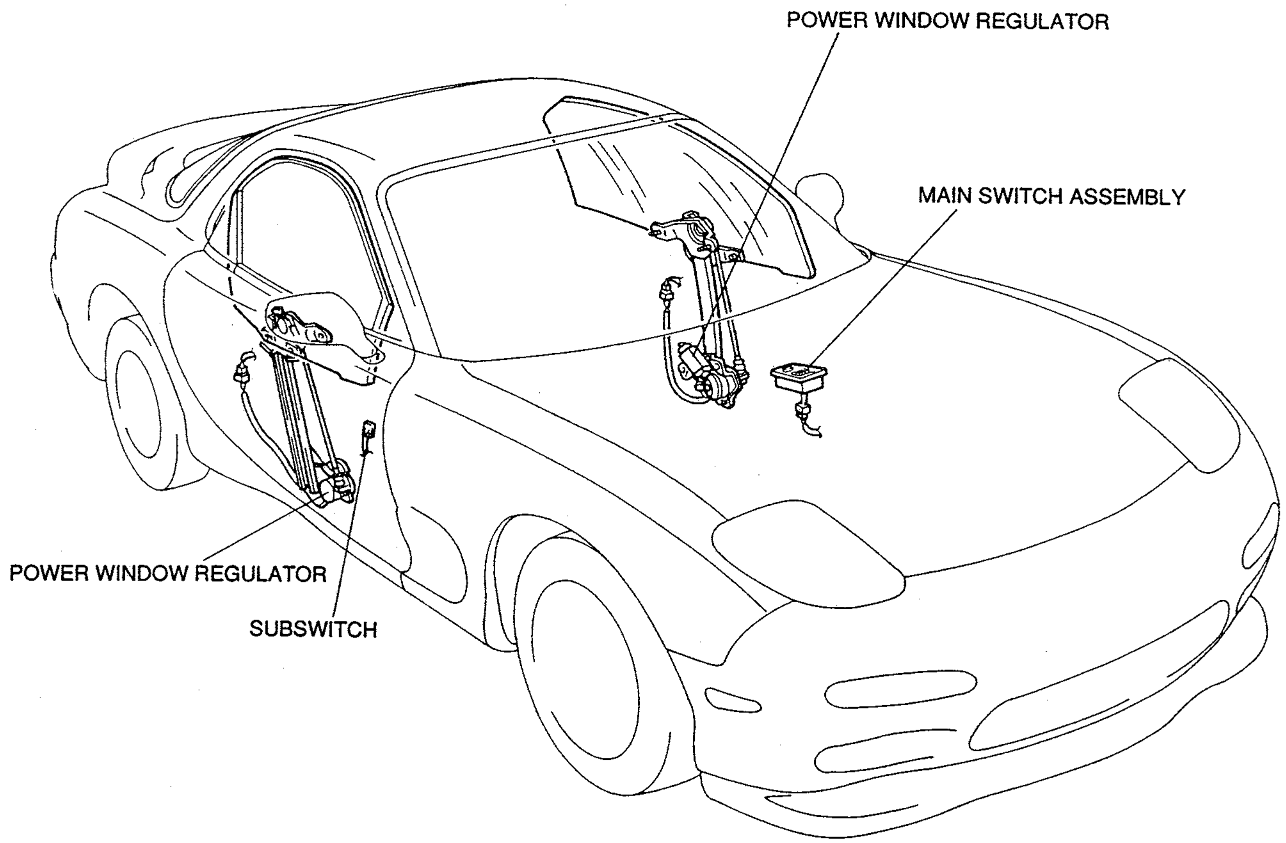

37U0SX-546

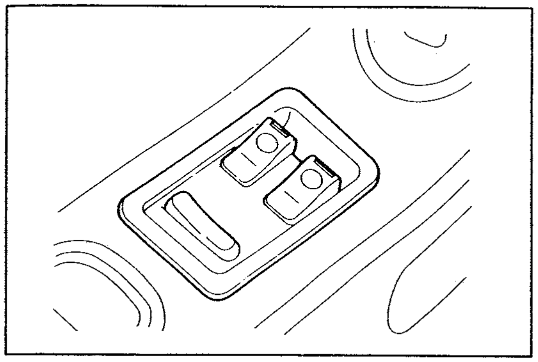

37U0SX-547

Driver-side Power Window Switches

- To prevent accidental closing of the window, the switches on the main switch assembly must be pressed to lower the glass, and lifted to raise the glass.

Specifications

Rated voltage	12V
Stalled current	8A (28A when locked)

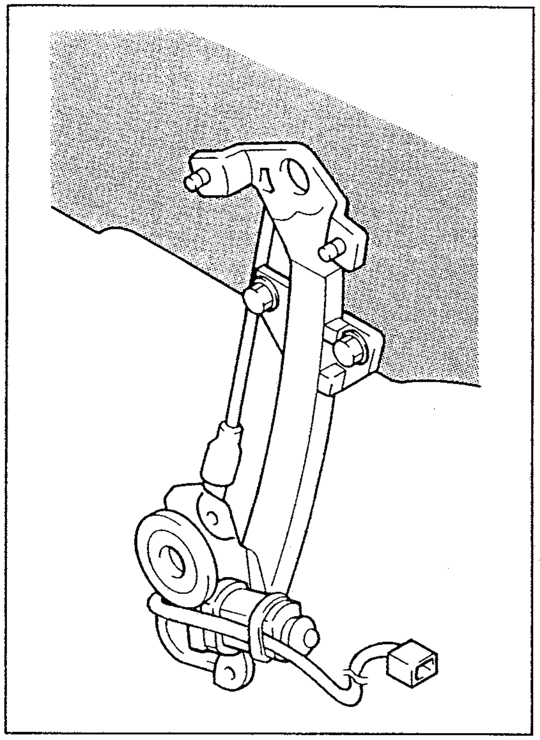

37U0SX-548

Power Window Regulator

- A wire-type window regulator is used because of its light weight.
- The motor contains a built-in bimetal breaker to prevent electrical damage.

Specifications

Rated voltage	12V
Stalled current	28A
Motor breaker operating time	Opens 4—60 seconds after motor is locked. Closes within 60 seconds.

Circuit Diagram

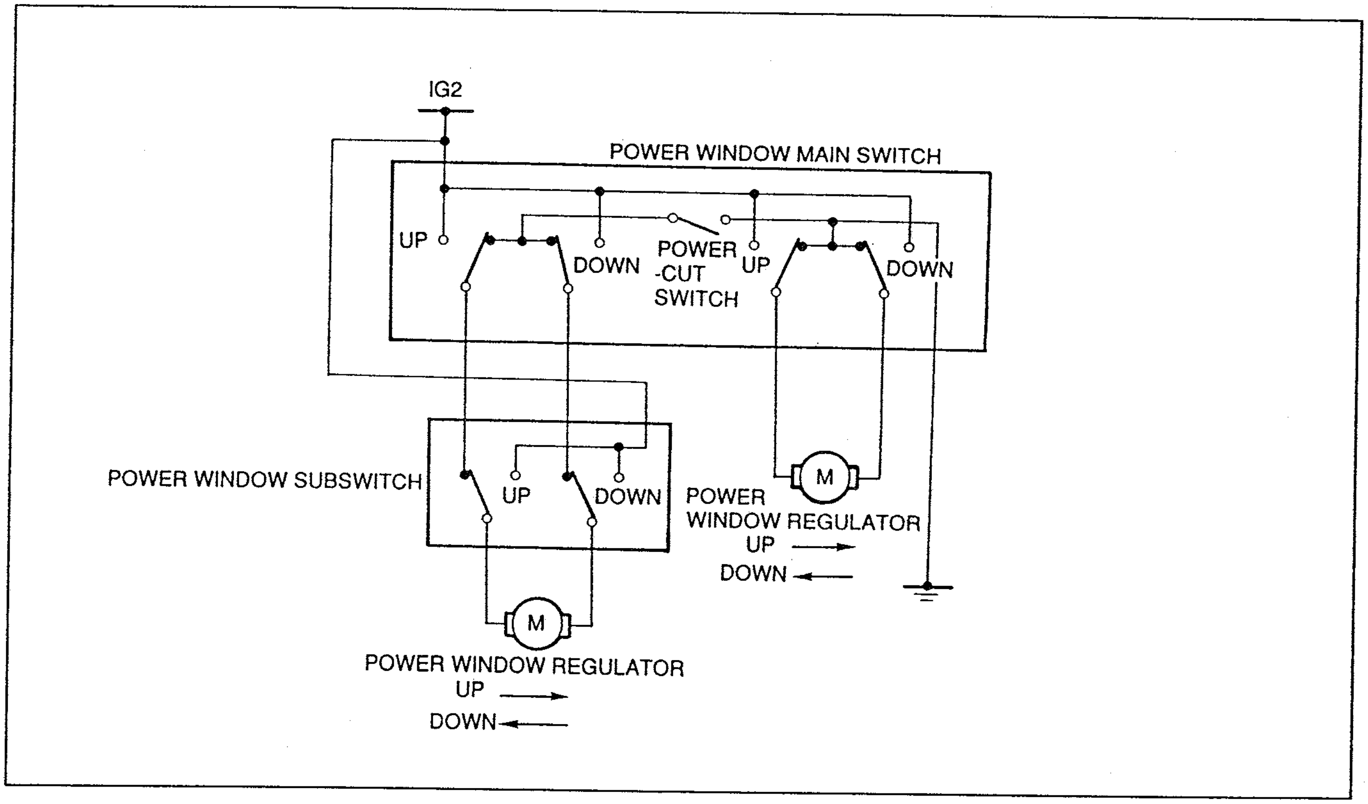

1PE0SX-535

System Operation

1. Main switch assembly

- When one of the switches is pressed with the ignition ON, current flows as shown by the solid line (arrow 1). The motor rotates and the window opens.
- If the switch is then lifted, current will flow as shown by the dotted line (arrow 2). The motor will rotate in the opposite direction and the window will close.

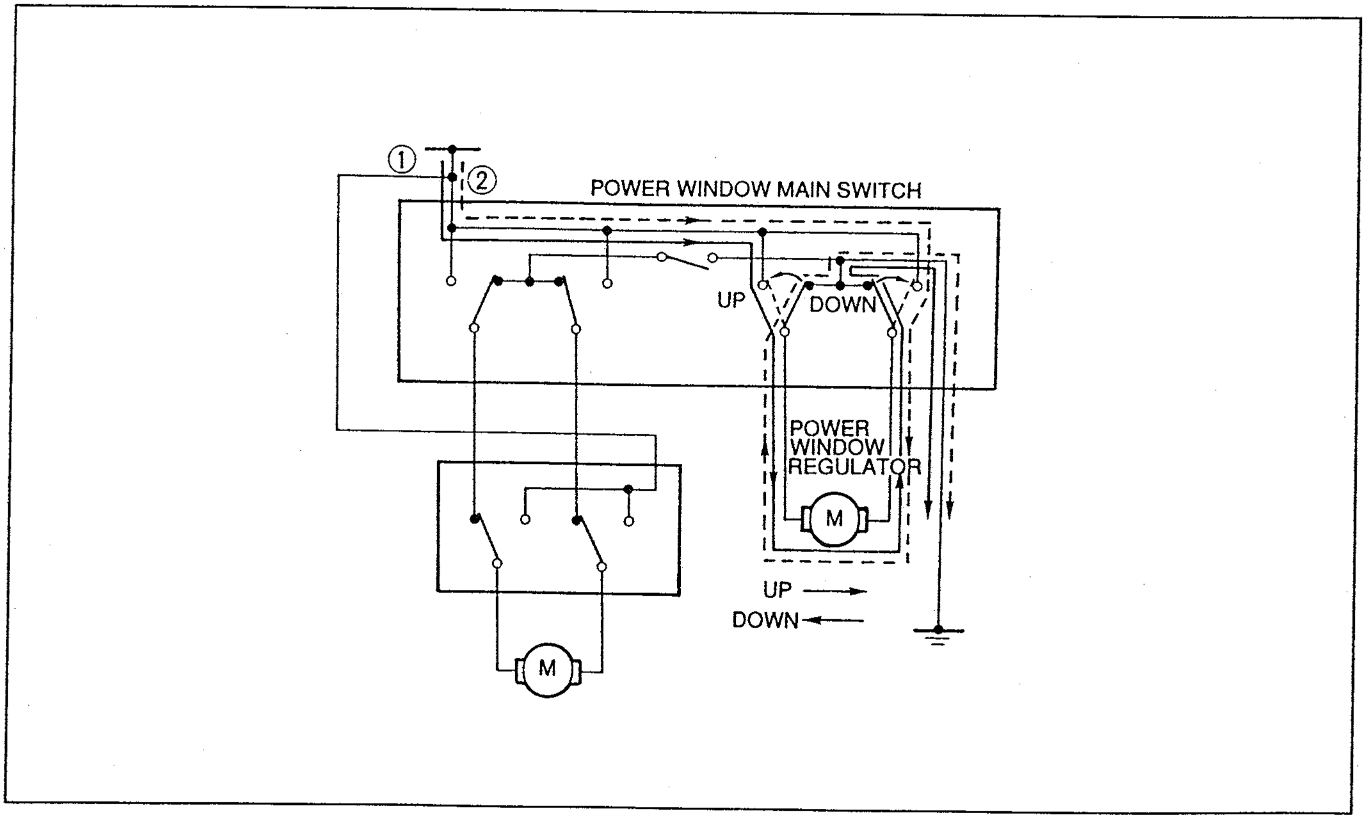

37U0SX-549

2. Subswitch

- When the top of the subswitch is pressed with the power-cut switch and ignition switch ON, current flows as shown by the solid line (arrow 1). The motor rotates and the passenger window opens.
- If the bottom of the subswitch is then pressed, current will flow as shown by the dotted line (arrow 2). The motor will rotate in the opposite direction and the passenger window will close.

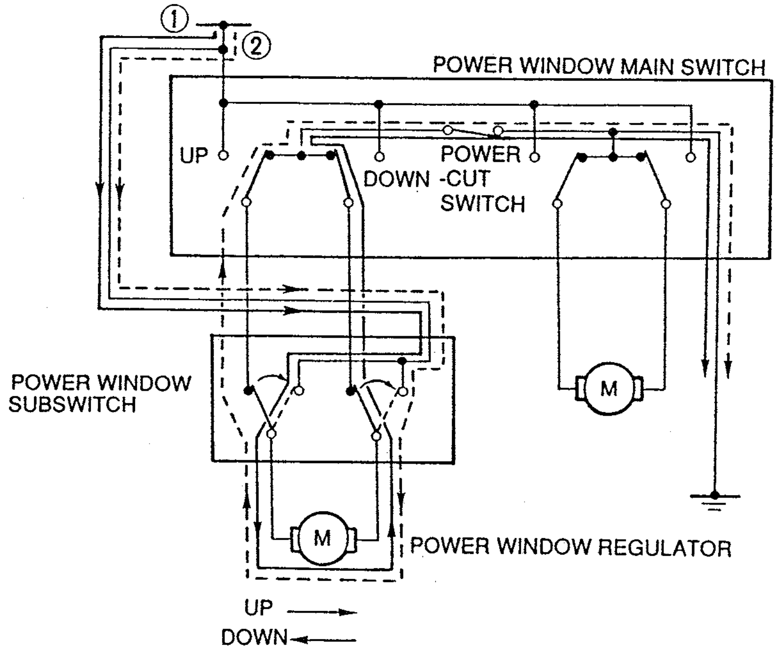

37U0SX-550

SECURITY MEASURES

OUTLINE

- Special measures are taken to prevent theft and unwanted entry into the vehicle.

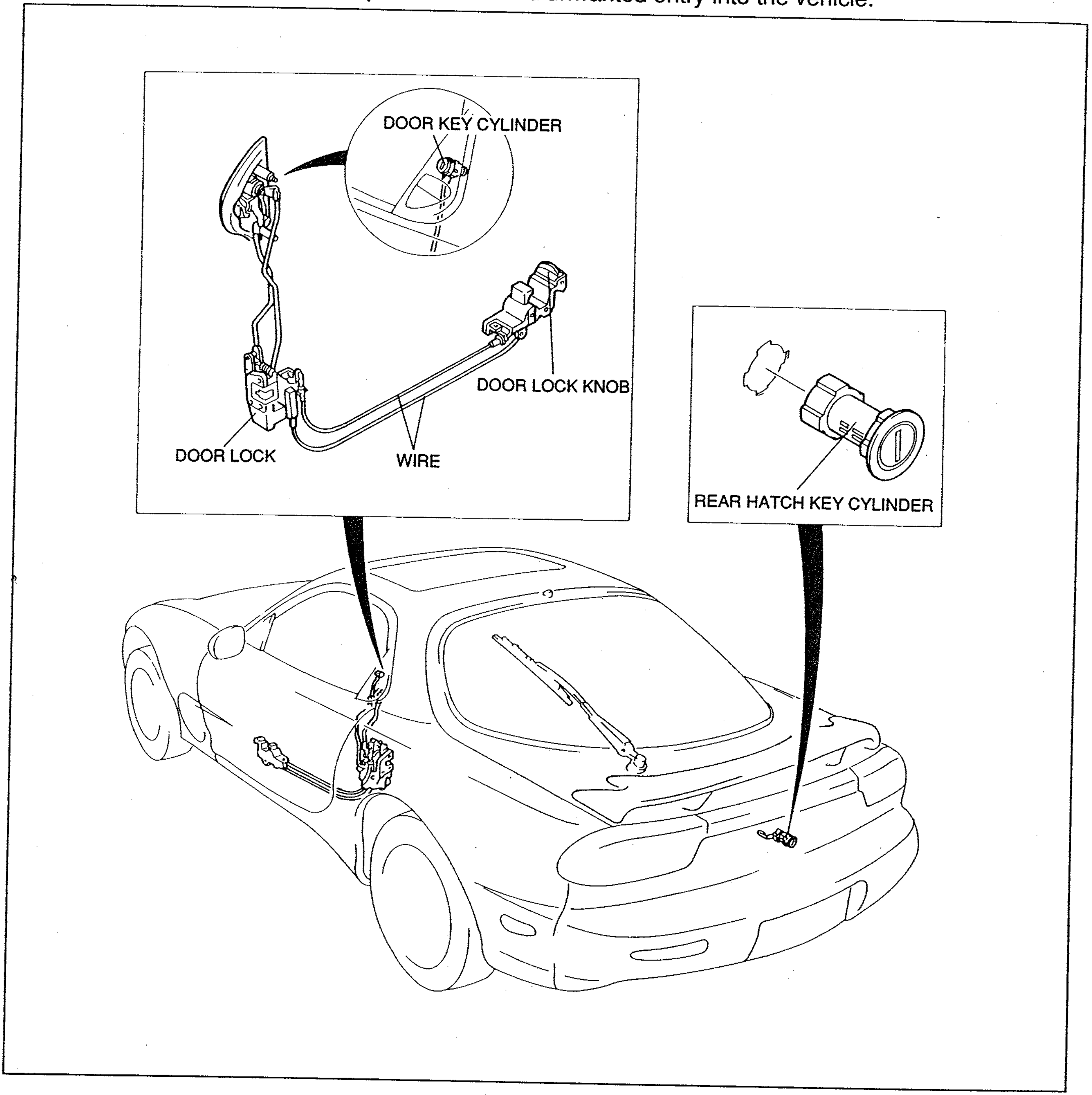

Door key cylinder

- The door key cylinder is incorporated into the outer door handle structure to ensure secure installation.

Door lock knob

- The door lock knob and door latch are connected by a wire to prevent the door from being unlocked with a hook from the outside.

Door lock

- The door lock mechanism is protected by a theft-deterrent cover to prevent the door from being unlocked with wire from the outside.

Rear hatch key cylinder

- The rear hatch key cylinder head has four mounting flanges to ensure strong retention.

DASHBOARD

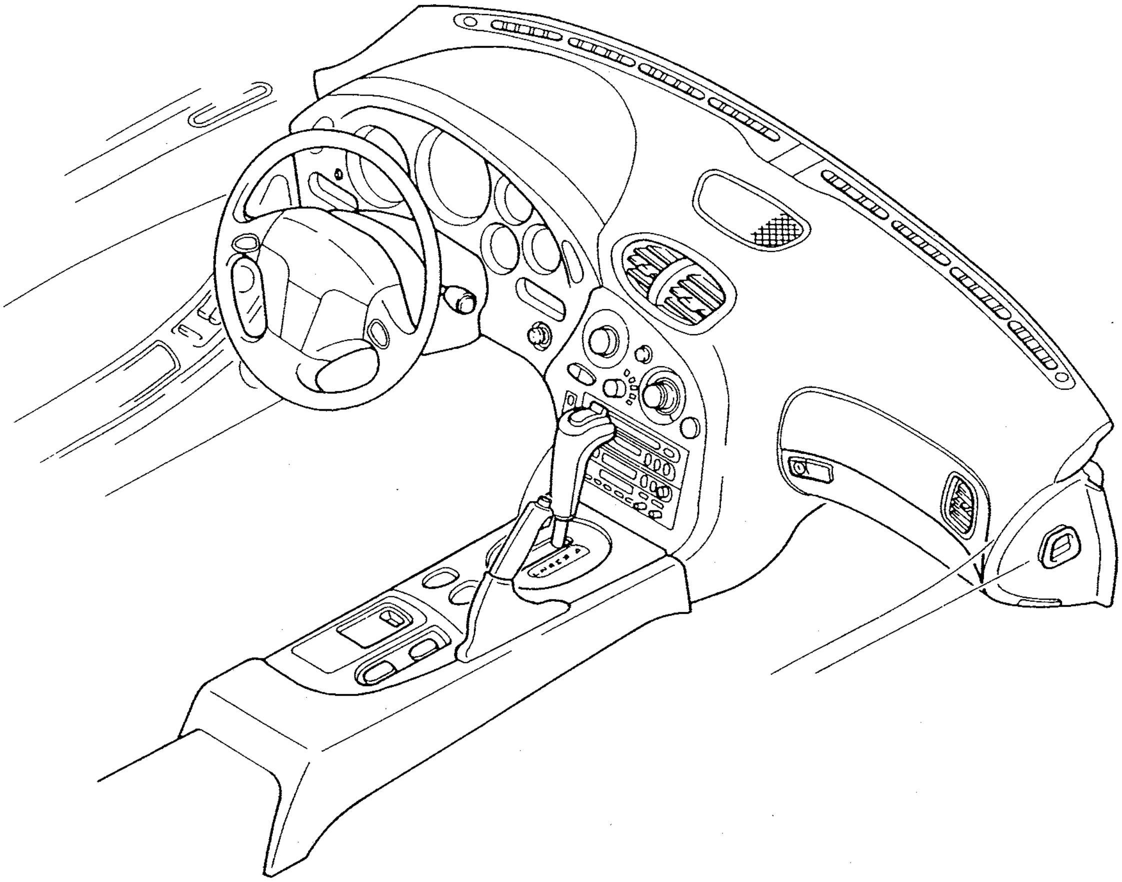

37U0SX-552

- The color of the meter hood and center panel contrasts with that of the interior trim to present an original and unique look.
- The instrument panel is curved so that all of the switches and gauges face the driver.

TRIM

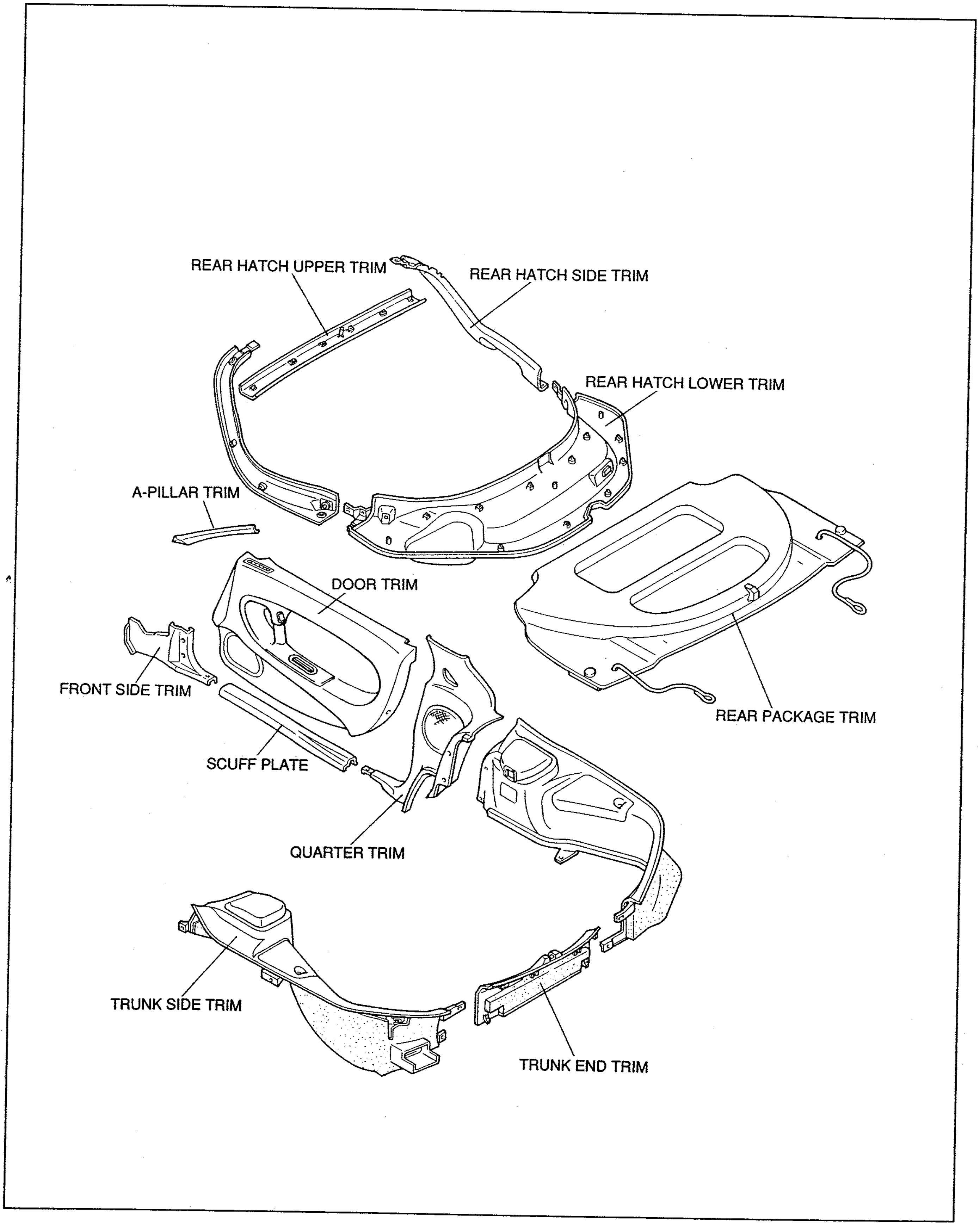

37U0SX-553

- The instrument panel, door trim, and rear console are styled to deliver a look of continuity and to provide the driver and passenger with a neat and comfortable driving environment.

Door Trim

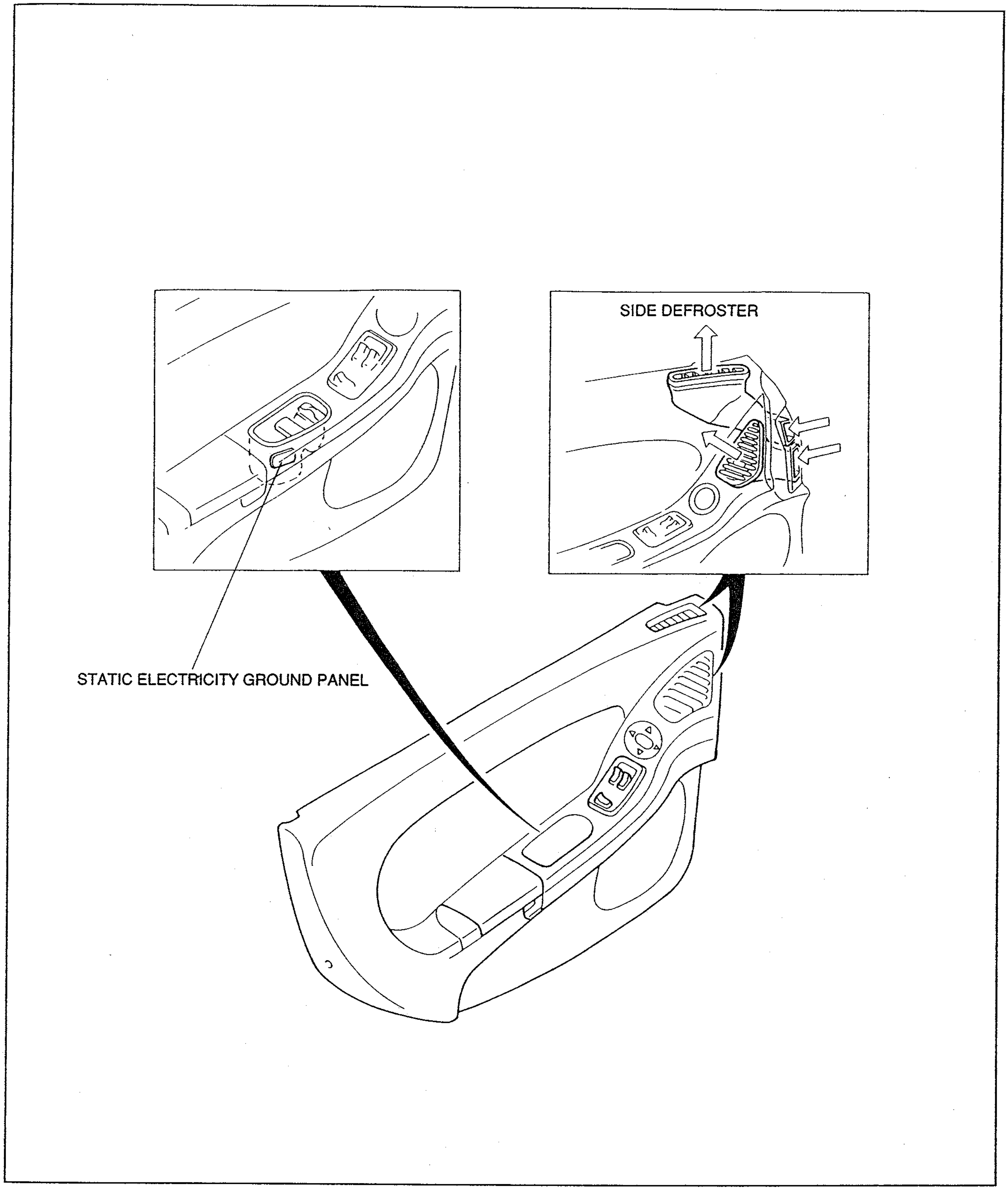

37U0SX-554

- Static electricity ground panels are installed on the pull handles of the doors to prevent unpleasant static electric shock when getting in or out of the vehicle.
- When a static electricity ground panel is lightly touched, static electricity runs from the finger tips through the touch panel, to the inner door panel, then to ground.
- Side vents direct air to the side glass to reduce window fogging.

SEATS

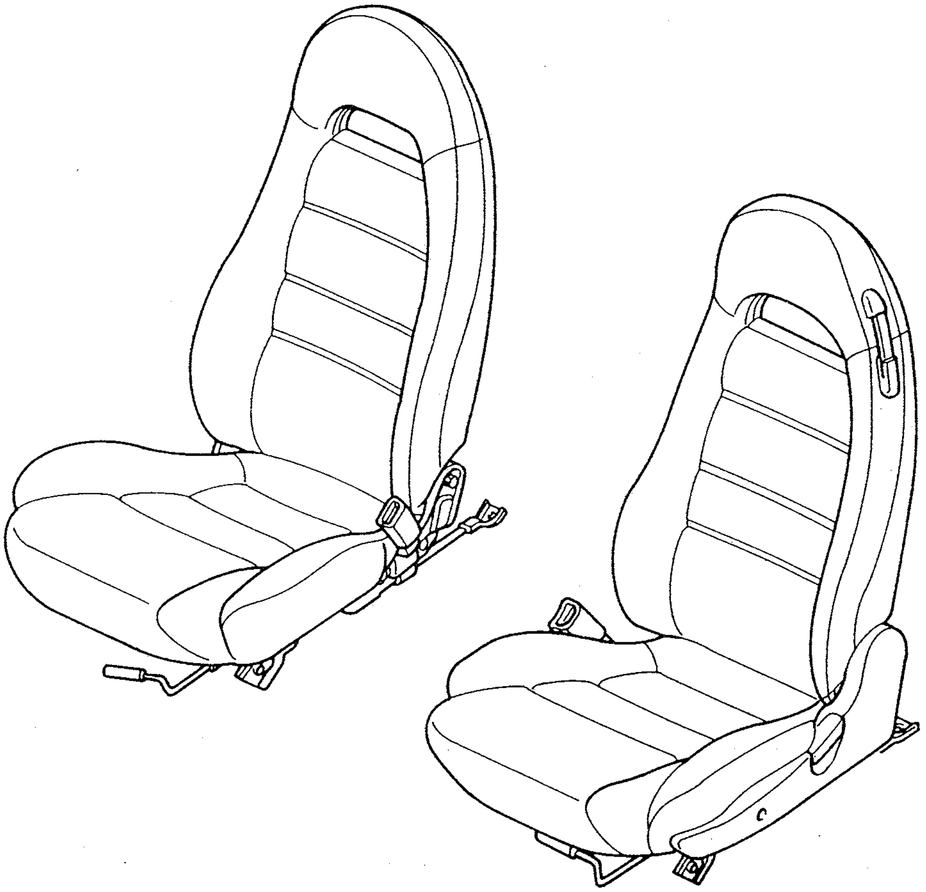

37U0SX-555

- Specially contoured seats provide the driver/passenger with proper side and back support for comfortable, spirited, and extended driving pleasure.
- The seats in the touring model are covered with specially processed leather, which provides a smooth feeling and improved holding.

SEAT BELTS

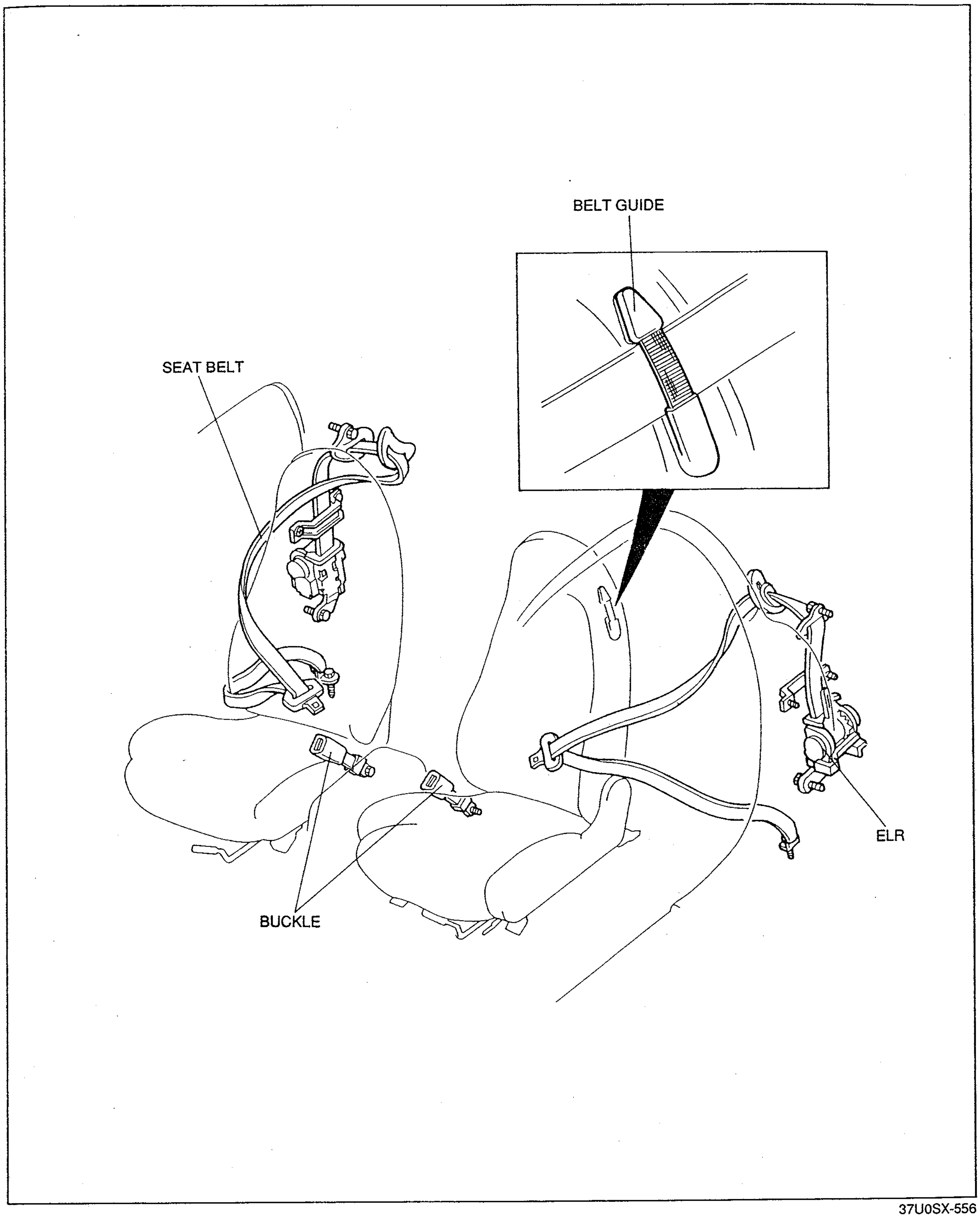

37U0SX-556

- ELR (emergency locking retractor) three-point seat belts are used.
- Belt guides are installed on the seats.
- The seat belt buckles are installed on the seat frames.

BODY ELECTRICAL SYSTEM

37U0TX-501

OUTLINE

- There are many convenience and safety features that are standard equipment on all models. These include:
  - High-mount stoplight
  - Driver-side door key cylinder illumination and ignition key cylinder illumination
  - Rear window defroster system with timer function
  - Cargo compartment lamp
  - Panel lamp brightness control
  - Cruise control system
  - Driver-side air bag system
  - Theft-deterrent system (in CPU No.2)
- The interior lamp is mounted in the overhead console.
- A smoked panel is fitted to the rear combination light to conceal the lenses and to produce a unique, original look.
- Retractable headlights are again used to improve vehicle aerodynamics.
- The DRL (daytime running light) system is equipped on all Canada models.
- A headlight cleaner is also equipped on all Canada models.

37U0TX-502

MAIN FUSE BLOCK AND FUSE BLOCK

OUTLINE

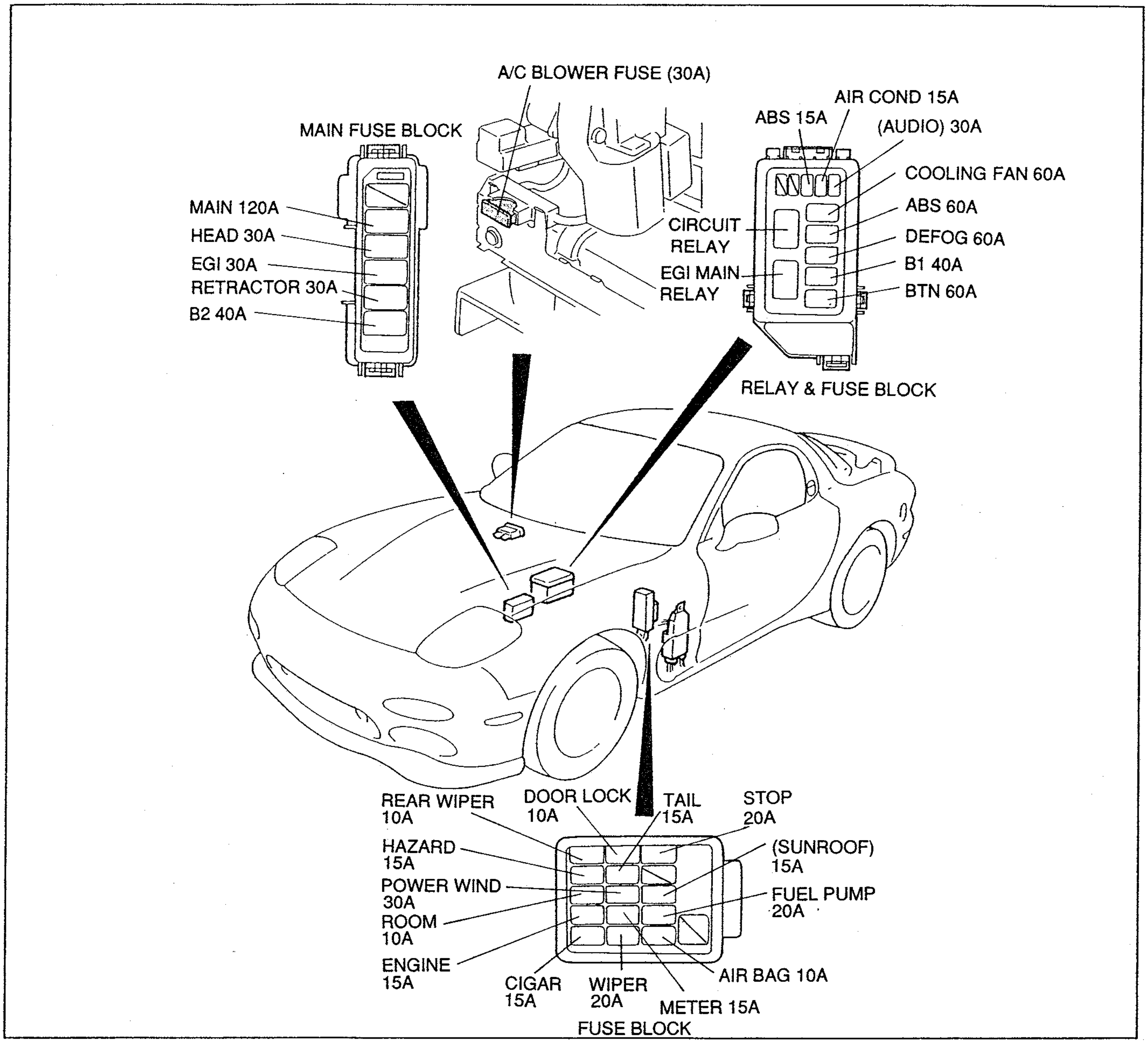

37U0TX-503

- For the main fuse block in the engine compartment, compact, high-efficiency cartridge-type fuses are used.
- For the fuse block, mounted on the left side kick panel, lightweight, compact blade-type fuses with strong durability against intermittent current flow are fitted.

SPECIFICATIONS

Main Fuse Block (Cartridge Type)

Fuse/Amperage	Color code	Protected circuit
MAIN 120A	White	Main fuse block No.2, Alternator
HEAD 30A	Pink	Headlight switch, Headlight relay, Retractable headlight switch
EGI 30A	Pink	Alternator, EGI main relay, Diagnostic module (Air bag)
RETRACTOR 30A	Pink	Retractable headlight actuator (RH and LH)
B2 40A	Green	Ignition switch

37U0TX-504

Relay & Fuse Block (Cartridge Type, Blade Type)

VB: Battery voltage

Fuse/Amperage	Color code	Protected circuit
BTN 60A	Yellow	All fuses (VB power)
COOLING FAN 60A	Yellow	Cooling fan relays No.1, No.2, No.4
ABS 60A	Yellow	ABS hydraulic unit
DEFOG 60A	Yellow	Rear window defroster relay
AIR COND 15A	Blue	A/C relay, Air pump magnetic clutch
(AUDIO) 30A	Green	Radio relay
ABS 15A	Blue	ABS warning lamp
B1 40A	Green	Ignition switch

37U0TX-505

Fuse Block (Blade Type)

Symbol	Fuse/Amperage	Color code	Protected circuit
+B	ROOM 10A	Red	CPU (in instrument cluster), Key interlock solenoid, Power antenna, Cargo compartment lamp, Key reminder switch, Ignition key illumination, Door key illumination, EC-AT control unit, Interior lamp, Audio unit, ECU, CPU No.2, Security lamp
	STOP 20A	Yellow	Stoplight switch, Cruise control unit
	DOOR LOCK 10A	Red	Power door lock relay
	HAZARD 15A	Blue	Horn relay, Flasher unit (in CPU No.2)
	TAIL 15A	Blue	TNS relay
ACC	CIGAR 15A	Blue	CPU No.1, A/C relay, Cigar lighter, Power outside mirror switch, Power antenna, Audio unit
IG1	ENGINE 15A	Blue	EGI main relay, Circuit opening relay, Starter cut relay, Diagnostic module (Air bag), Fuel pump relay
	METER 15A	Blue	Instrument cluster, CPU (in instrument cluster), Combination switch, CPU No.1, EC-AT control unit, Cruise control main switch, Cooling fan relays No.1, No.2, No.3, No.4, Power antenna, Rear window defroster relay, Rear washer motor, Inhibitor switch, Shift lock actuator
	FUEL PUMP 20A	Yellow	Circuit opening relay
	AIR BAG 10A	Red	Diagnostic module (Air bag)
IG2	(SUNROOF) 15A	Blue	Sunroof switch
	WIPER 20A	Yellow	Combination switch, Wiper motor
	(REAR WIPER) 10A	Red	Rear wiper motor, Heater control unit, ABS control unit
	POWER WIND 30A	Green	Power window main switch

37U0TX-506

RELAY

OUTLINE

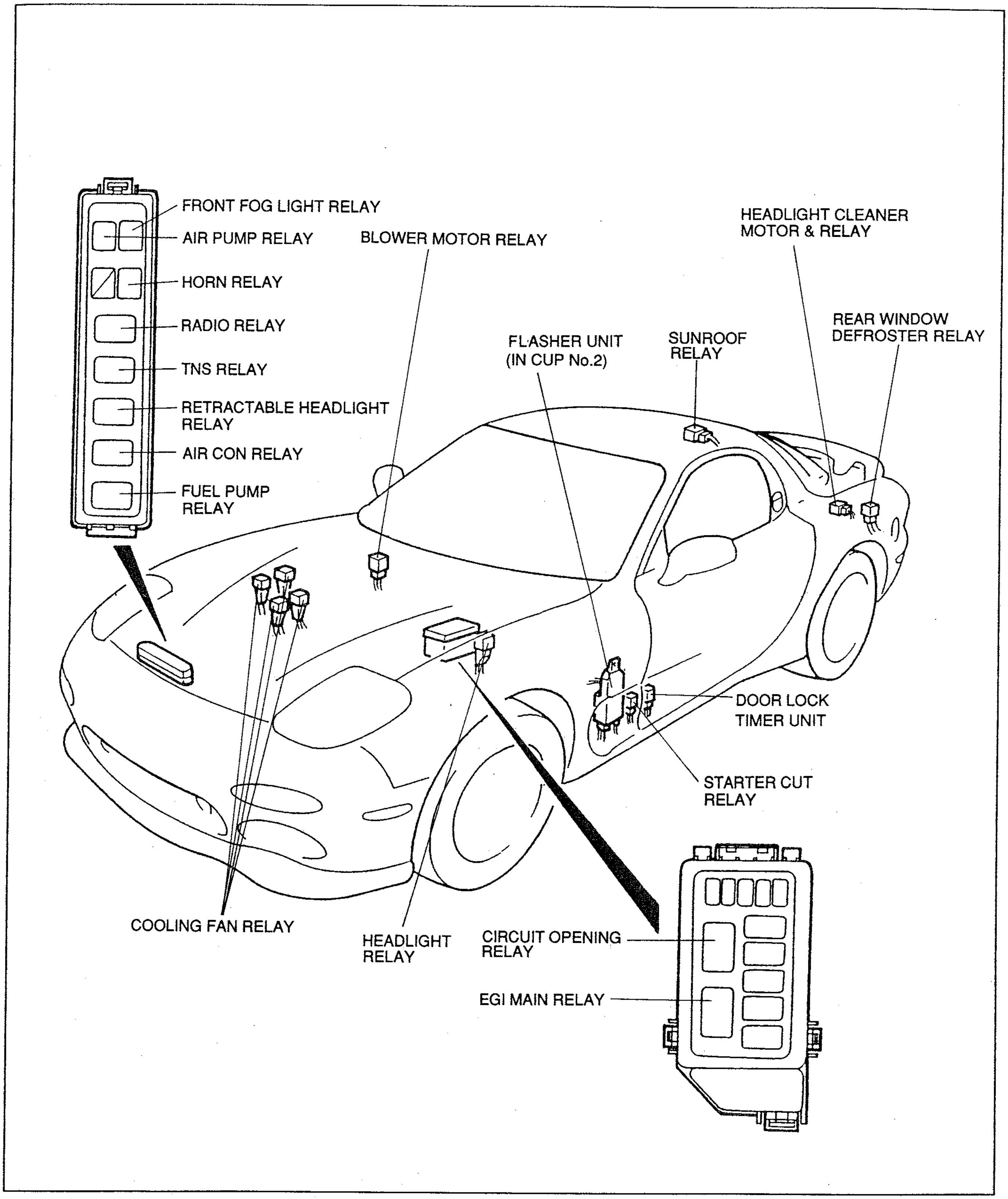

37U0TX-507

- The relays are concentrated at the following two points for improved serviceability:
  Relay box in engine compartment
  On left side kick panel
- The location and arrangement of the relays are as shown above.

CENTRAL PROCESSING UNIT (CPU)

OUTLINE

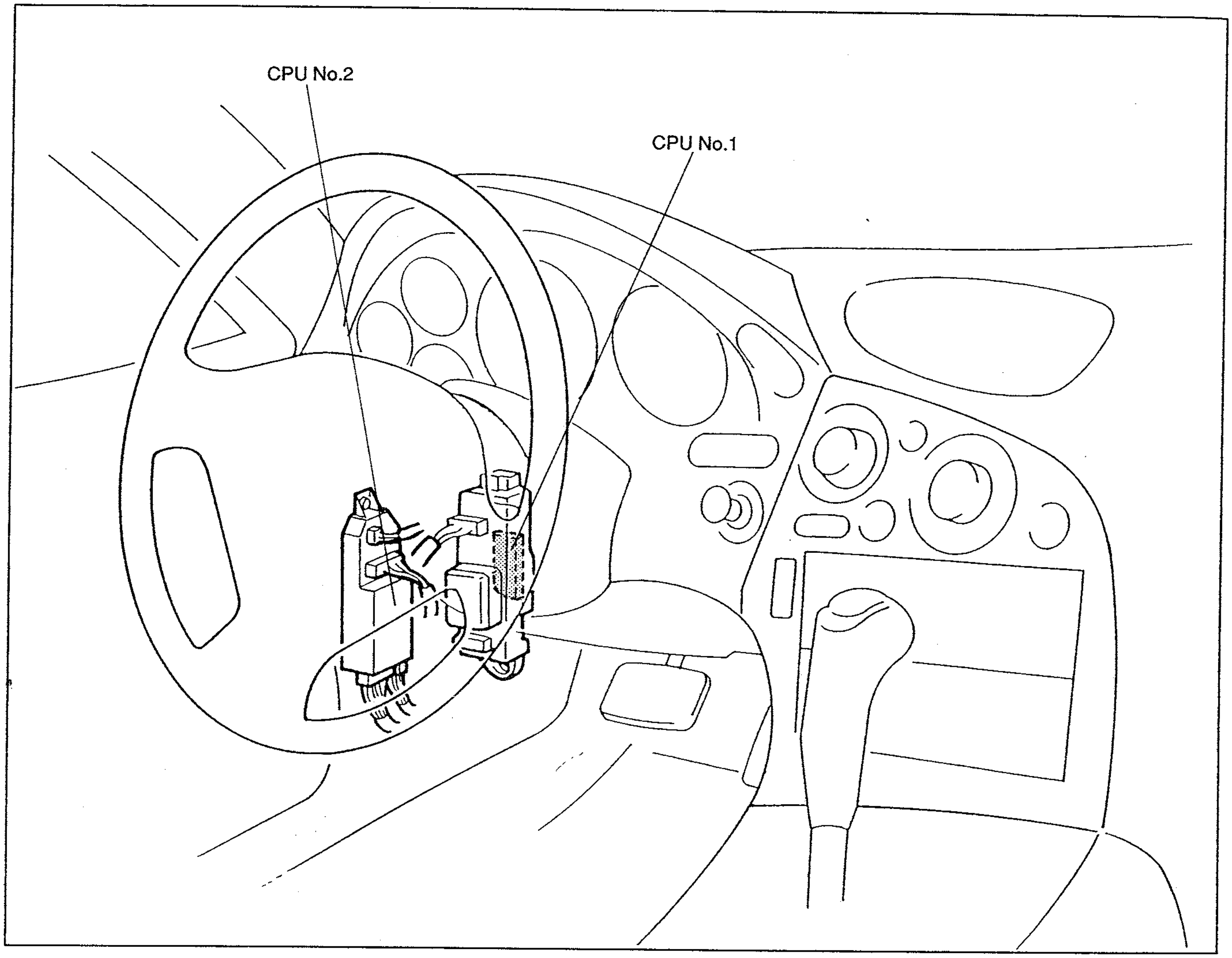

37U0TX-508

- There are two central processing units (CPU No.1 and CPU No.2) mounted on the joint box at the left kick panel.
- Each CPU is equipped with dedicated microprocessors to control the function of specific electrical units.

SPECIFICATIONS (CPU No.1)

Function	Load/Rating	Activated condition	Remark
Rear window defroster timer	Rear window defroster relay: 200 mA	IG1 ON. Rear window defroster switch ON.	Operation time: 12—18 min
Rear wiper intermittent timer	Rear wiper motor: 3A	With rear wiper switch ON, wiper motor rotates three times, pauses, then repeats single rotation and pausing.	Intermittence (pause): 13—15 sec
Rear wiper washer continuous operation	Rear washer motor: 3A	With washer switch ON, motor rotates. When washer switch turned OFF, wiper motor continues rotating for period.	Time lag: 0.2—0.8 sec Memory time: 1.6—3.6 sec Operation time: 0.2—0.8 sec

37U0TX-509

SPECIFICATIONS (CPU No.1) Cont'd

Function	Load/Rating	Activated condition	Remark
Key interlock (AT)	Key interlock solenoid 1A	• With ignition switch at ACC or IG1 position and selector lever at except P range, key interlock function operates (Key interlock solenoid coil turns OFF after programmed period.) • When ignition switch is turned OFF during interlock operation, function deactivated. • When selector lever at P range during interlock operation, function deactivated. • When ignition switch at ACC position and selector lever at except P range during interlock operation, key interlock resistor turns OFF after programmed period.	Operation time: 2—3 sec (Key interlock solenoid coil) 0.9—1.1 hour (Key interlock resistor)

37U0TX-510

SPECIFICATIONS (CPU No.2)

Function	Load/Rating	Activated condition	Remark
Turn signal and hazard warning lights	(Turn signal and hazard warning lights) Front turn signal light: 27W × 2 Rear turn signal light: 27W × 2	(Turn signal light) IG1 ON and turn signal switch ON. (Hazard warning light) Hazard warning switch ON.	Flashing frequency: 75—100 cycles/min
Key illumination timer	Ignition key illumination lamp: 1.4W × 2	• With door switch ON or outer door handle switch ON, ignition key illumination comes ON. • When door switch or outer door switch is turned OFF, ignition key illumination remains ON for programmed period.	Operation time: 15—21 sec 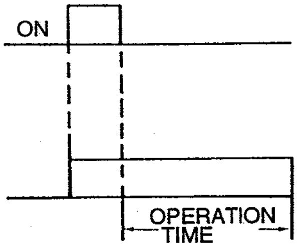

37U0TX-511

SPECIFICATIONS (CPU No.2) Cont'd

Function	Load/Rating	Activated condition	Remark
Seat belt warning timer	Seat belt warning lamp: 1.4W	IG1 ON Seat belt warning indicator lamp illuminates for programmed period. When buckle switch ON (seat belt buckle tongue not inserted), warning alarm sounds during programmed operation time.	Operation time: 4—8 sec
Theft-deterrent system	Security lamp: 1.4W Starter cut relay: 200 mA Headlight relay: 200 mA Horn relay: 150 mA Retractable headlight relay: 200 mA Warning buzzer: 20mA Hazard output: 200mA	(Refer to page T–70)	Security lamp flash condition 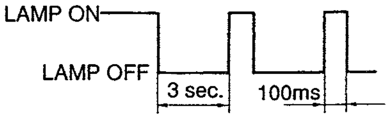
Daytime running lights (DRL)	Front turn signal light: 27W × 2 Parking brake warning lamp: 1.4W	DRL comes on when IG2 ON	

37U0TX-512

SPECIFICATIONS (CPU No.2)

Function		Activated condition	Remark
Warning alarms	Ignition key reminder	Intermittently sounds when: • Keyless switch ON, • IG1 OFF, • Door switch ON.	t₁: 250 ± 50 m Sec. t₂: 125 ± 25 m Sec. 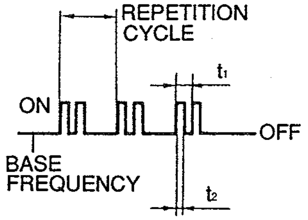
	Lights-on reminder	Intermittently sounds when: • Light switch ON, • IG1 OFF, • Door switch ON.	
	Seat belt warning	Intermittently sounds when: • Seat belt timer ON, • Buckle switch ON.	
	Over revolution warning	Buzzer sounds continuously when engine speed exceeds approximately: (AT) 6,800—7,000 rpm (MT) 7,300—7,500 rpm	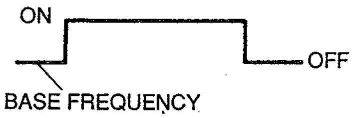
	Coolant level warning	Buzzer sounds continuously and lamp comes on when: • Coolant level sensor ON, • IG1 ON.	

37U0TX-513

SYSTEM DIAGRAM
CPU No.1

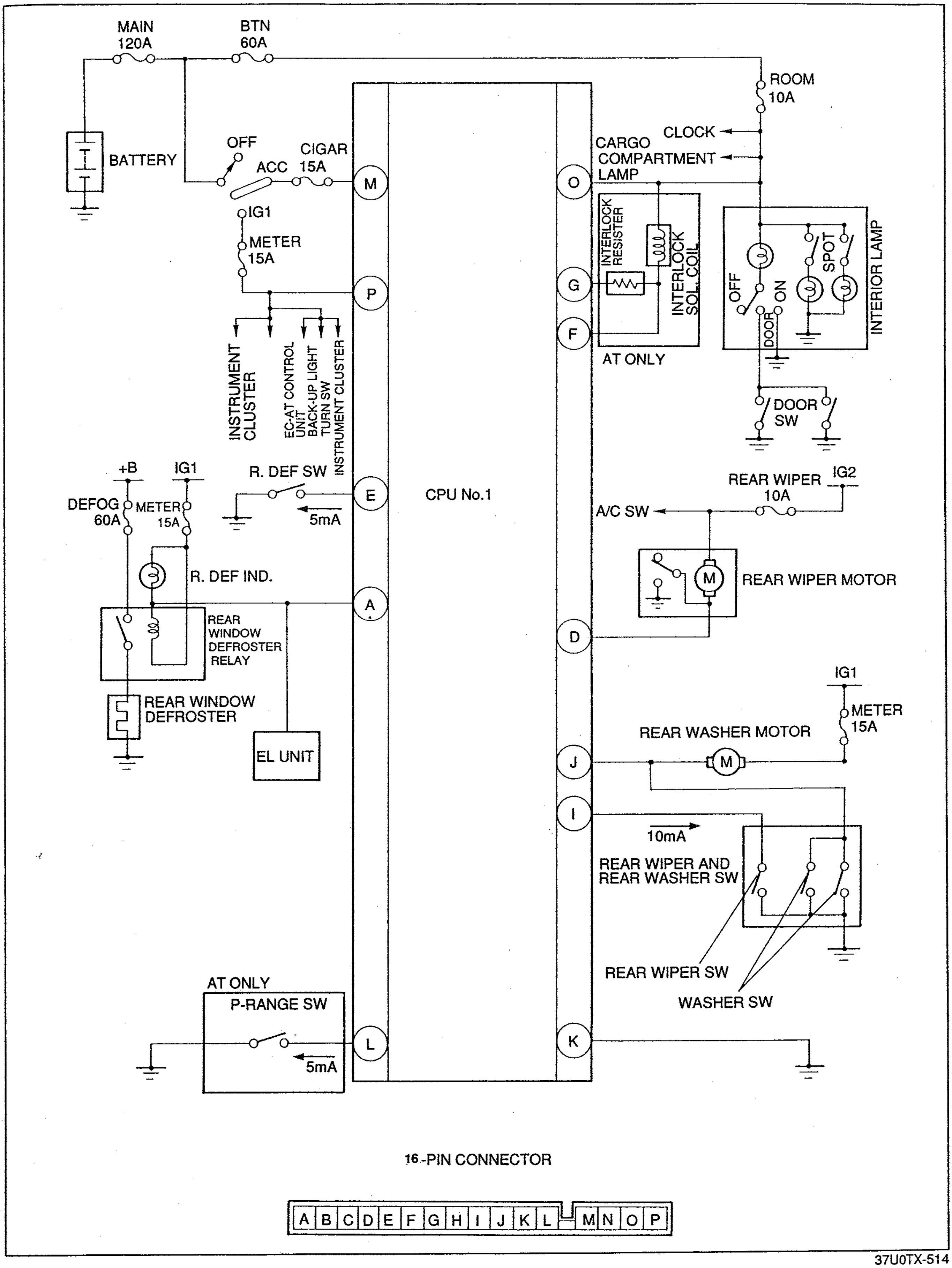

37U0TX-514

CPU No.2

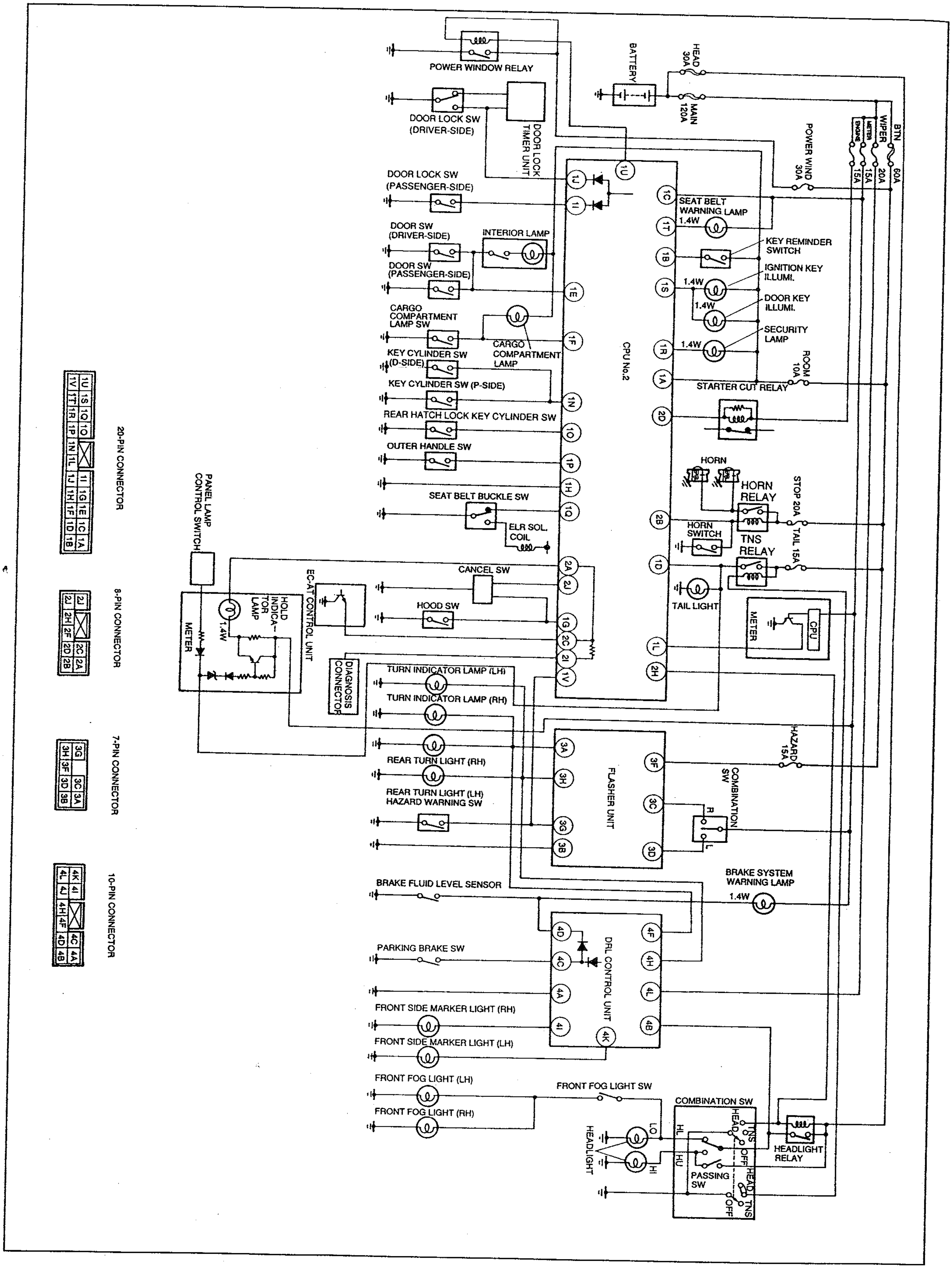

37U0TX-515

SWITCH

OUTLINE

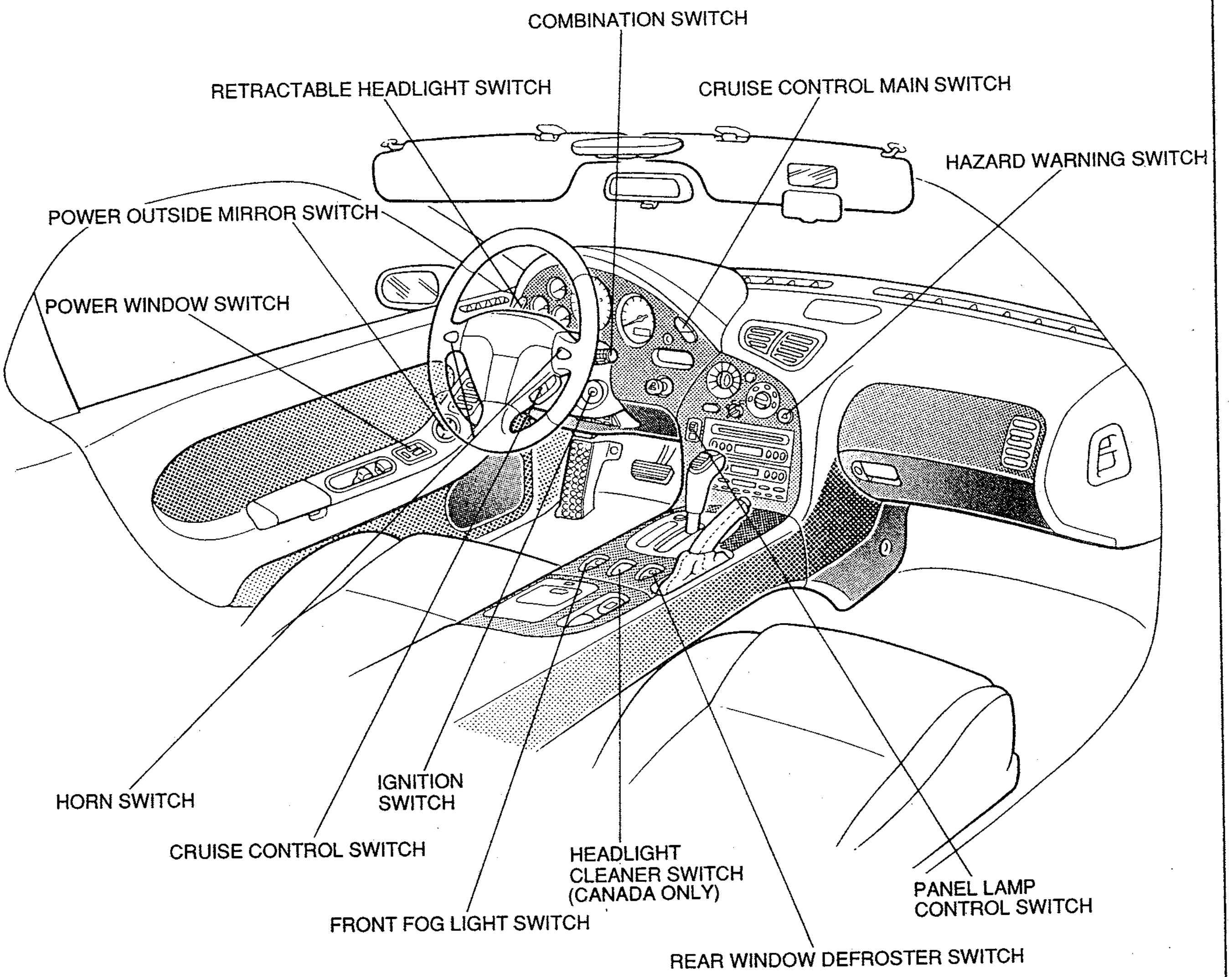

37U0TX-516

- Switches are arranged around the meters on the instrument panel and the panel is curved so that all switches and meters face the driver for improved visibility and operability.
- The hazard warning switch is located in the middle of the instrument panel for improved safety.
- The cruise control switch is mounted on the steering wheel hub for improved safety and operability.
- The front fog light switch, rear window defroster switch, and headlight cleaner switch are located in the center panel.

COMBINATION SWITCH
Specification

Switch		Lever operation	Circuit diagram
Headlight switch		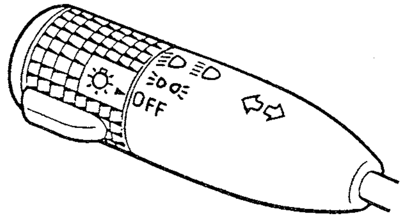	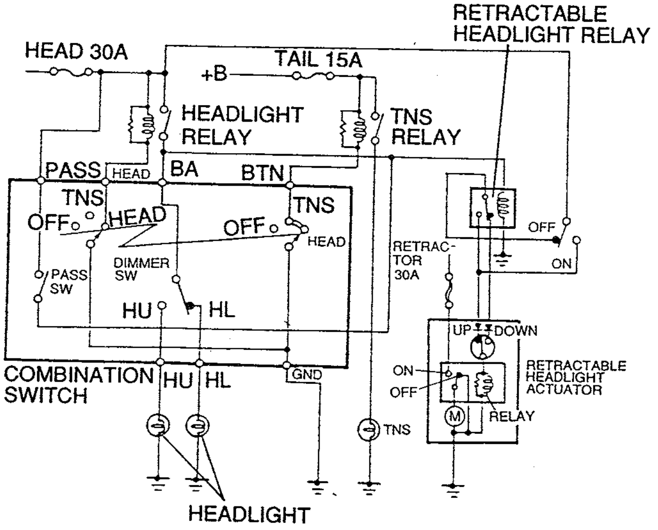
Wiper switch	Front	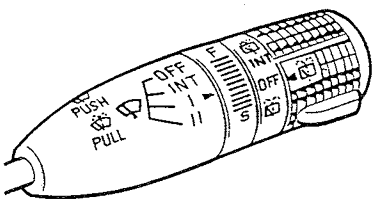	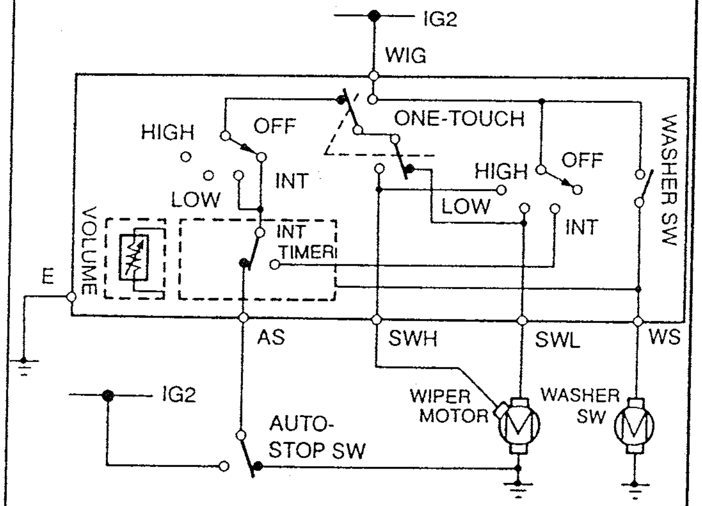
	Rear	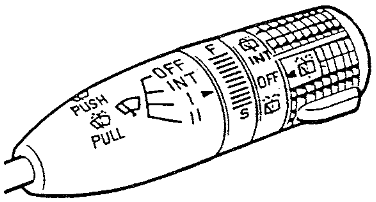	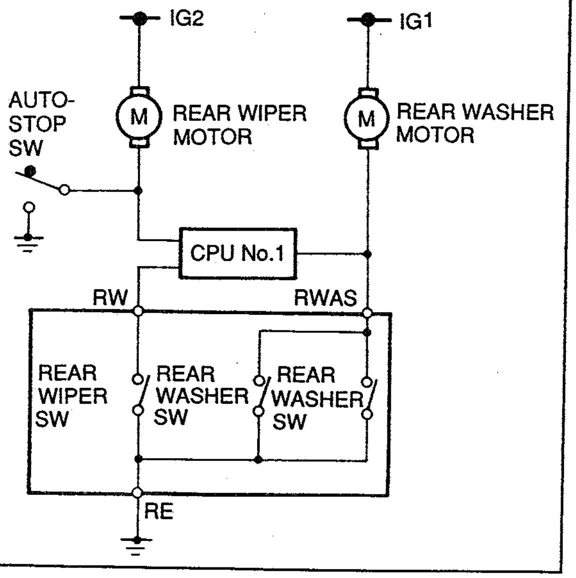

37U0TX-659

<table>
<tr><th>Switch</th><th>Circuit diagram</th><th>Switch connectors</th></tr>
<tr>
<td>Turn signal and hazard warning light switch</td>
<td>
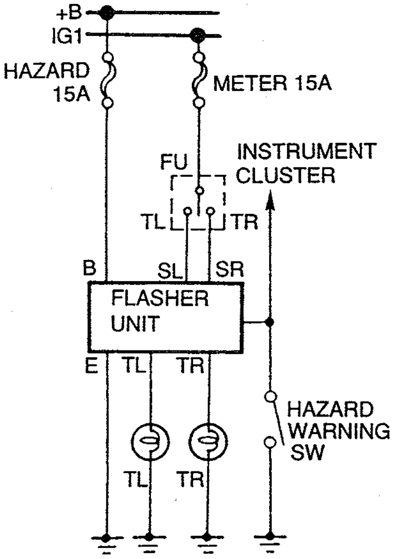

</td>
<td>
TURN SIGNAL SWITCH CONNECTOR (COMBINATION SWITCH CONNECTOR)
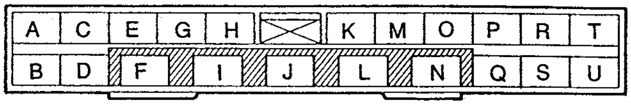

HAZARD WARNING SWITCH CONNECTOR
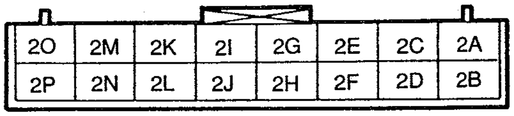

</td>
</tr>
</table>

37U0TX-517

CRUISE CONTROL SWITCH

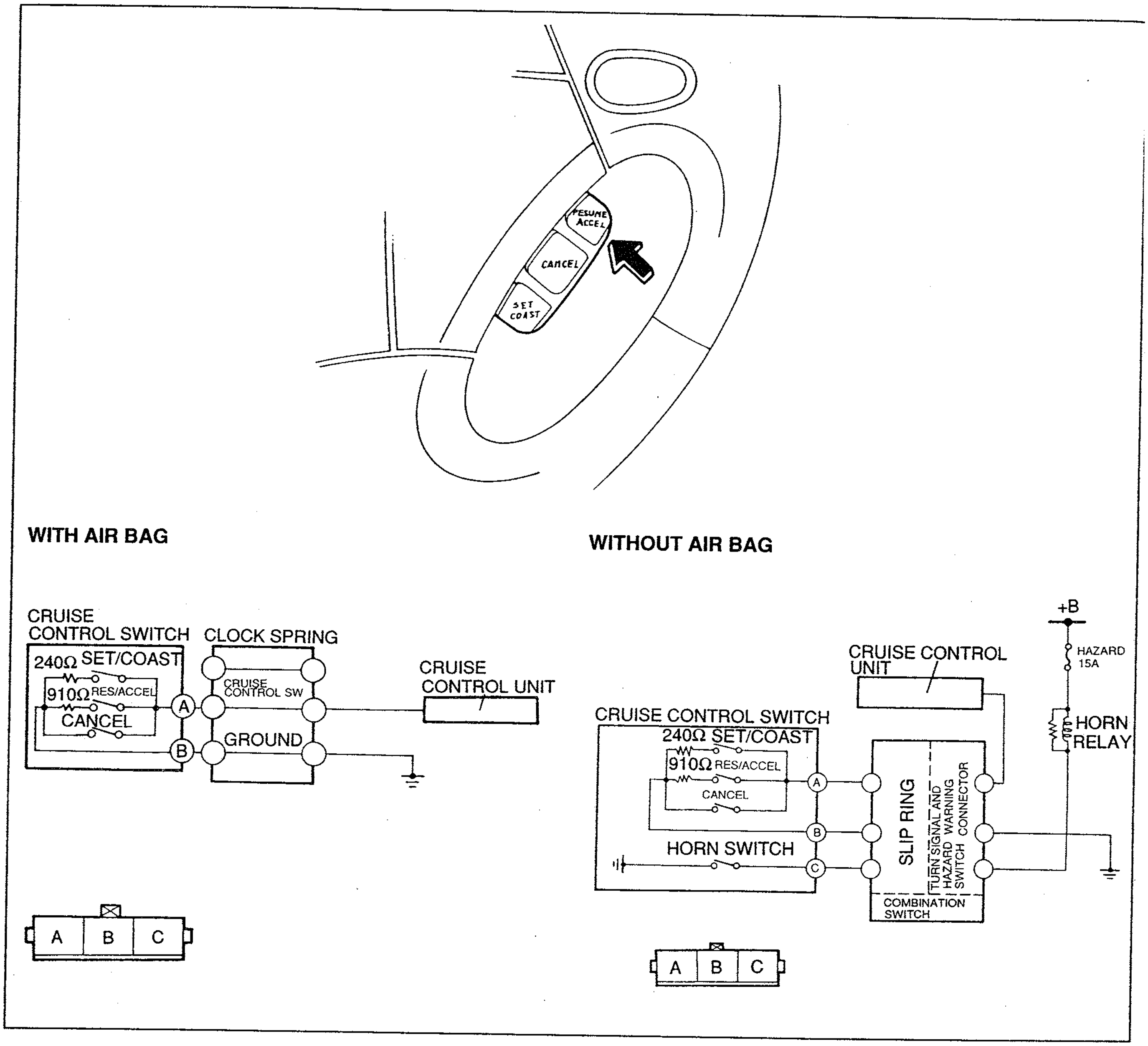

37U0TX-518

- The cruise control switch is mounted on the steering wheel hub for improved operability.
- The cruise control switch sends output signals to the cruise control unit which judges the operation command based on the signal voltage.

Operation Description

Name	Switch	Description
SET/COAST push button switch	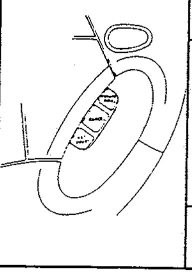	SET: Press switch to set vehicle speed for cruise control operation COAST: Press and hold switch to decrease preset cruise control speed until desired speed is obtained
RESUME /ACCEL push button switch		RESUME: Press button to resume cruise control operation after temporarily cancelling cruise control speed setting Cruise control resumes when vehicle is running at 40 km/h {24.8 MPH} or faster ACCEL: Press and hold switch to increase preset cruise control speed until desired speed is obtained
CANCEL push button switch		Press button to cancel cruise control speed setting

37U0TX-519

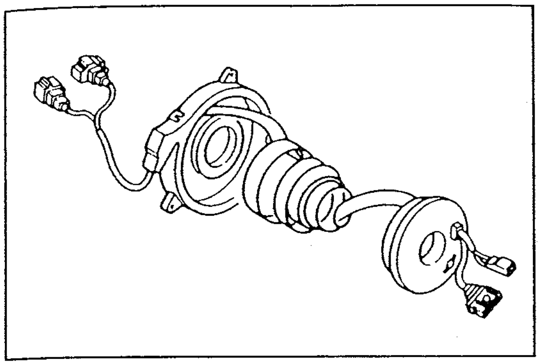

37U0TX-520

CLOCK SPRING CONNECTOR

- The clock spring connector is part of the air bag system.
- The clock spring connector serves as the connection of the cruise control switch, horn switch, and air bag module to the vehicle wiring harness.

LIGHTS AND LAMPS

OUTLINE

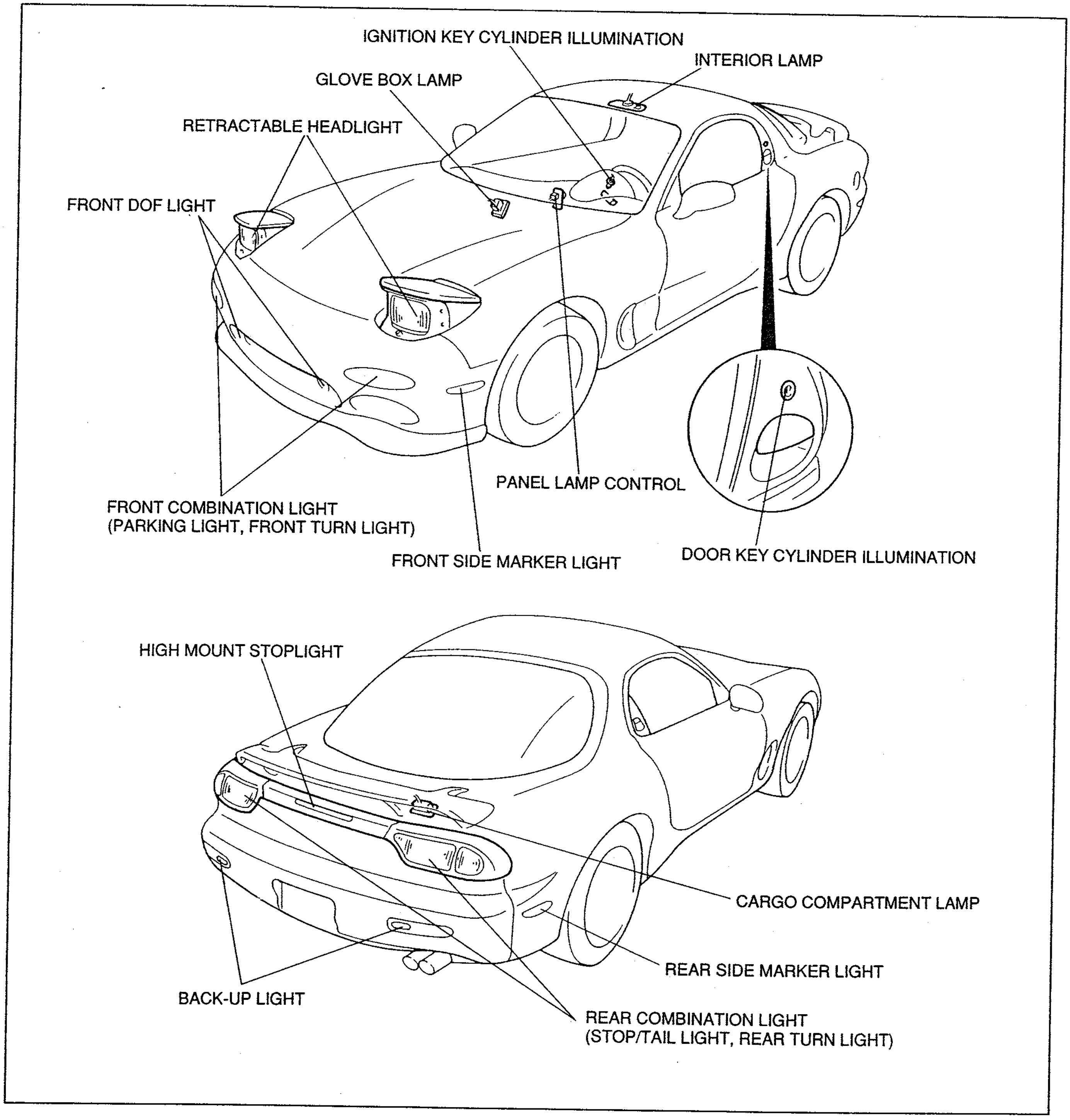

37U0TX-521

- The retractable headlights and the high-mount stoplight produce a sporty appearance.
- The smoked panel, fitted to the rear combination light, conceals the stop- and taillights to produce a unique, original look.
- The driver-side door key illumination lamp and the ignition key illumination lamp are standard for all models.
- The interior lamp is mounted in the overhead console.
- The cargo compartment lamp is fitted to all models.
- The standard panel lamp control function adjusts illumination of instrument cluster.
- The DRL (daytime running light) system is equipped to Canada specification model.
- The glove box lamp is installed to all models.

SPECIFICATIONS

Name		Capacity (W)	Number of bulbs	Bulb trade number
Headlight	High/Low	60/55	2	(HB 2)
Parking light		5	2	—
Front turn signal		27	2	3,497
∗ DRL		27/8	2	3,496
Front side marker light		4.9	2	168
Front fog light		35	2	—
Rear combination light	Stop/Taillight	27/8	4	1,157
	Rear turn signal light	27	2	1,156
Back-up light		27	2	1,156
Rear side marker light		3.8	2	194
License plate light		5	2	—
High-mount stoplight		18.4	3	921
Interior lamp	Interior lamp	5	2	—
	Cargo compartment lamp	8	1	—
	Glove box lamp	3.4	1	—

∗: DRL (daytime running light) is for Canada model only.

37U0TX-522

RETRACTABLE HEADLIGHT

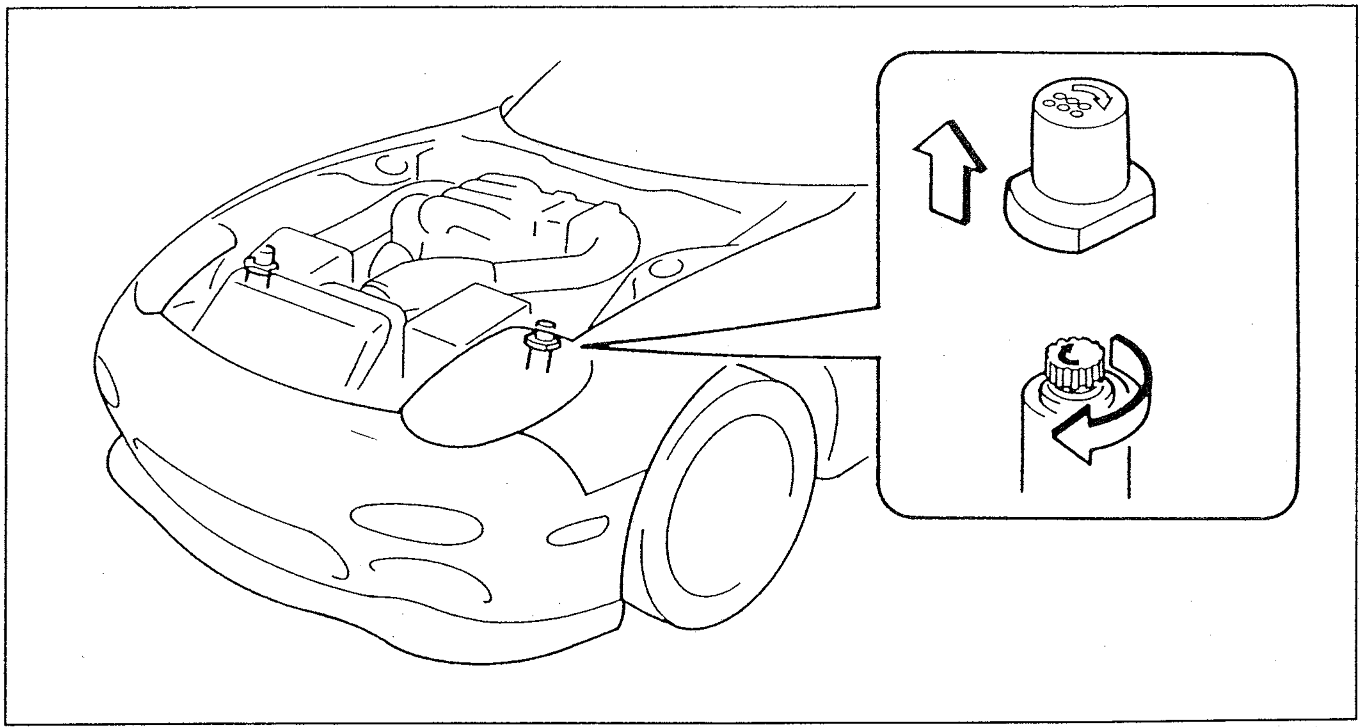

37U0TX-523

- If the retractor is damaged, the headlight can be manually raised/retracted by turning the knob atop the retractor motor.

Manual Operation

1. Turn the light switch OFF.
2. Disconnect the negative battery cable.
3. Remove the rubber cap from the motor as shown.
4. Turn the red knob clockwise to raise/retract the headlight.

OPERATION DESCRIPTION
Retractable Headlight Switch

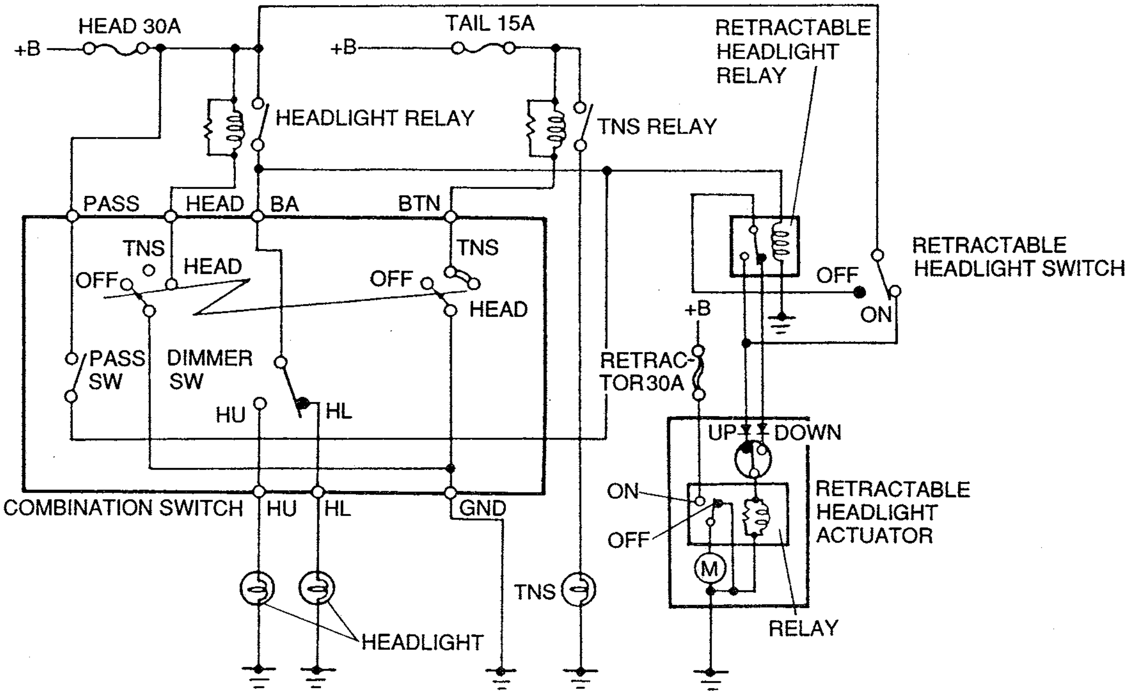

37U0TX-524

The retractable headlight actuator rotates clockwise only.
The headlights are raised/retracted by the link mechanism of the system.

Operation

- Retractable headlight switch turned ON when headlight is in fully retracted condition.
  The retractable headlight actuator internal relay turns ON to activate the condition.
  When the headlight is fully raised, the contact of the limit switch in the motor changes from UP to DOWN; relay turns OFF and the motor stops.
- Retractable headlight switch turned OFF when headlight is in fully raised condition
  The retractable headlight actuator internal relay turns ON to activate the motor.
  The limit switch in the motor is at the DOWN position, and the headlight starts retracting.
  When the headlights is fully retracted, contact of the limit switch in the motor changes from DOWN to UP; relay turns OFF and the motor stops.

Headlight Switch

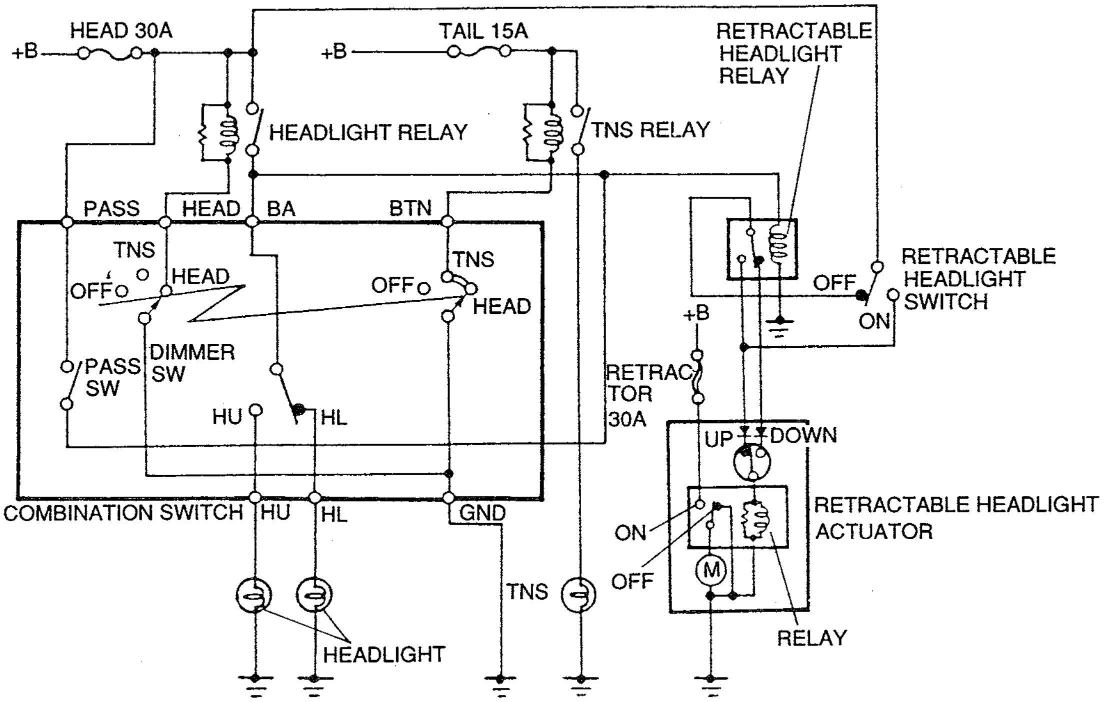

37U0TX-525

Operation

- Headlight switch turned to second position when retractable headlight switch is OFF.
  The headlight comes on and the retractable headlight relay turns ON. Current flows to the retractable headlight actuator internal relay to turn relay ON and the motor is activated.
  When the headlight is fully raised, contact of the limit switch in the motor changes from UP to DOWN; relay turns OFF and the motor stops.
- Headlight switch turned OFF when retractable headlight switch is OFF.
  The retractable headlight relay is turned OFF and shuts off the current flow. As the limit switch in the motor is at the DOWN position, relay turns ON and the motor is activated. When the headlights are fully retracted, contact of the limit switch in the motor change from DOWN to UP; relay turns OFF and the motor stops.

  This retracting operation is possible only when the retractable headlight switch is OFF. If the switch is ON, the headlights remain raised.

DAYTIME RUNNING LIGHT (DRL)-CANADA SPEC.

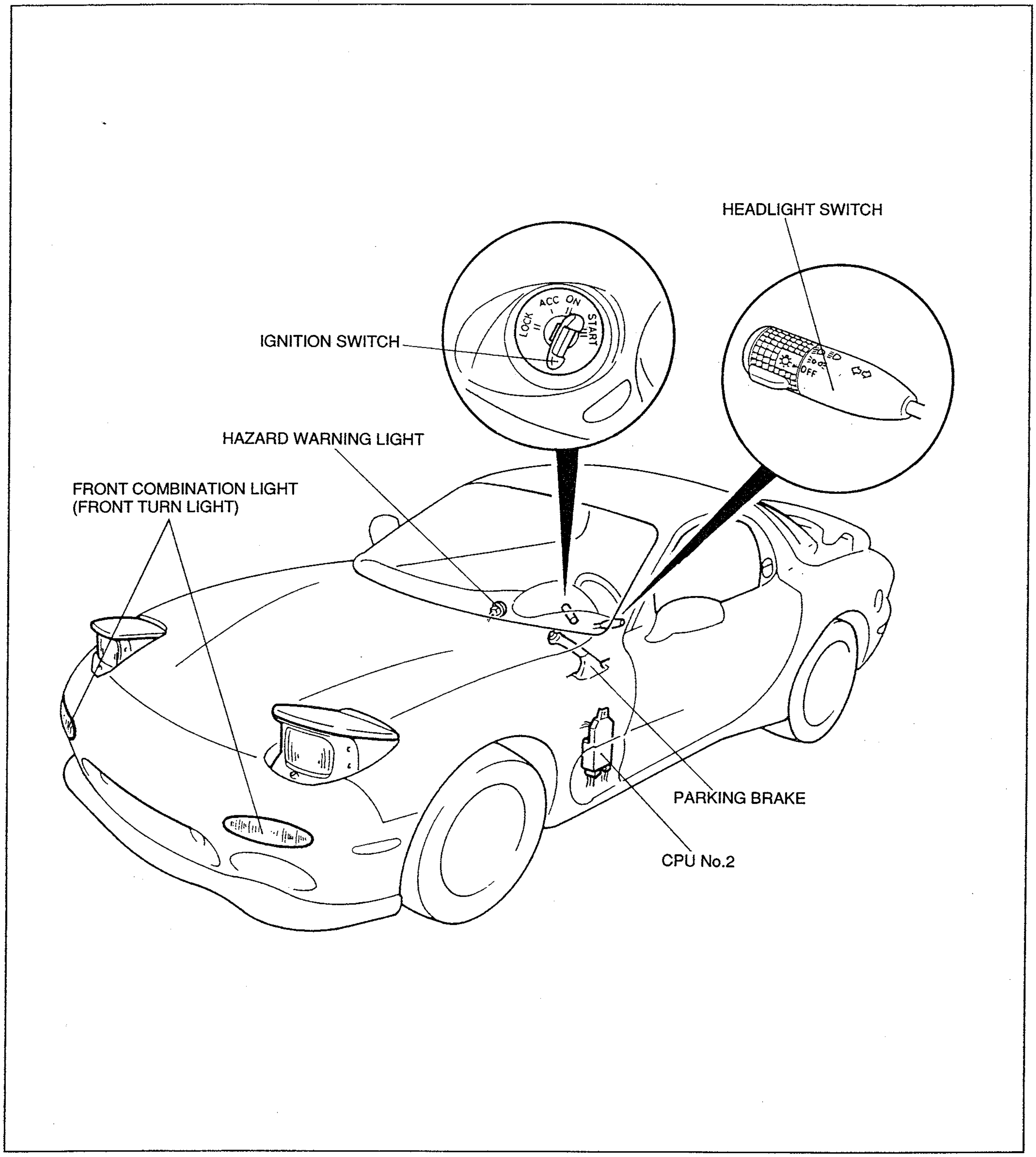

37U0TX-526

Daytime running lights (DRL) system is included to satisfy motor vehicle regulations of Canada.

Operation:

The front turn lights automatically illuminate as the running lights
The daytime running lights are switched off under any of the following conditions:

1. When headlights are switched ON.
2. When parking brake is applied.
3. When turn signal lights are switch ON.
4. When hazard warning lights are switch ON.

SYSTEM DIAGRAM

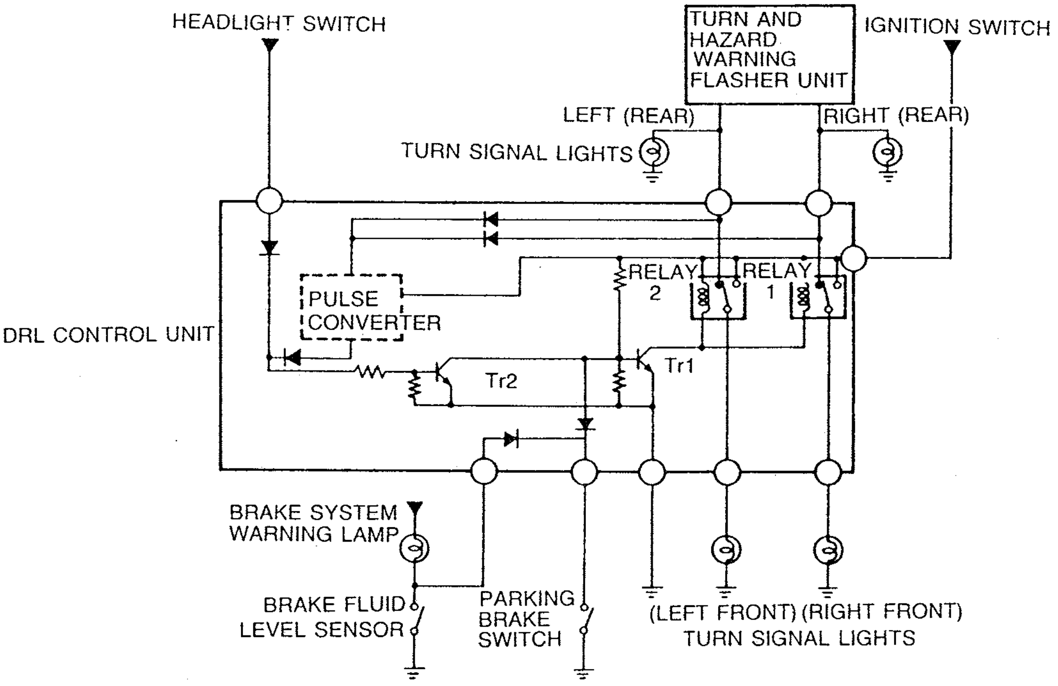

37U0TX-527

Operation

The DRL control unit controls operation of the turn signal lights and daytime running lights as described below.

- When the ignition switch in the ON or START position, Tr1 is turned ON unless Tr2 is also ON. Relay 1 and relay 2 are turned ON, and current flows to the turn signal lights and they illuminate as DRL.
- If one or more of the switches below is ON, Tr2 comes ON and cancels Tr1 operation. The turn signal lights then work as normal.
  - Headlight switch
  - Turn signal switch
  - Hazard warning switch
  - Parking brake switch

INSTRUMENT CLUSTER

OUTLINE

CANADA

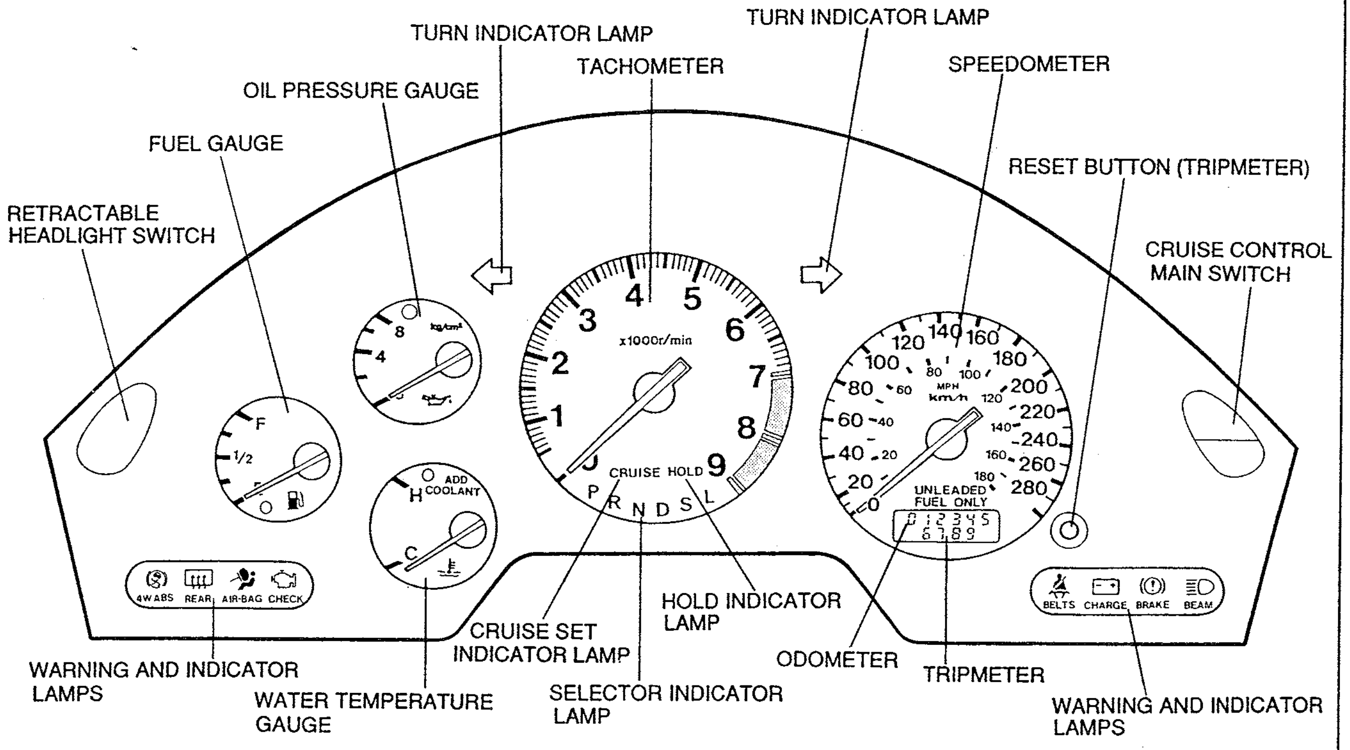

EXCEPT CANADA

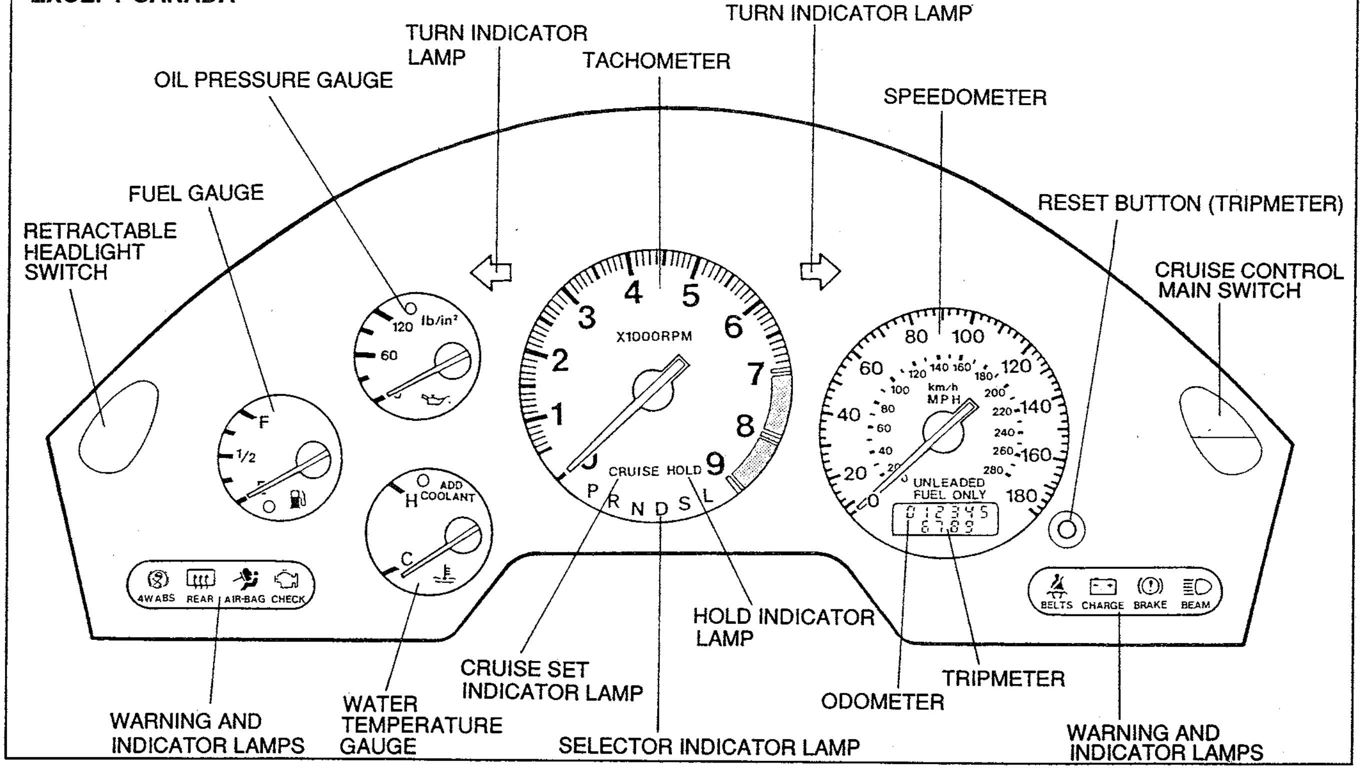

37U0TX-528

- A digital-type odometer and tripmeter are adopted for improved visibility.
- The AT selector indicator lamp is situated in the tachometer face for improved safety.
- The red zone of the tachometer is as follows;
  AT model: 7,000—9,000 rpm
  MT model: 7,500—9,000 rpm

SPECIFICATIONS
Speedometer

Type	Cross-coil (electric)
Indication (max.)	280 km/h {180 MPH}
Input pulses (per driven gear rotation)	8 (sine wave)
Output pulses (per rotation)	4

37U0TX-529

Tachometer

Type	Cross-coil (electric)
Input pulse source	ECU (EC-AT control unit)
Input pulses (per two engine rotations)	4
Indication range {rpm}	0—9,000

37U0TX-530

Fuel Gauge, Water Temperature Gauge

Name	Fuel gauge	Water temperature gauge
Type	Cross-coil	Cross-coil
Rated voltage	DC 12V	

37U0TX-531

Odometer / Tripmeter

Name	Odometer	Tripmeter
Indication digit	6	4
Indication unit (min)	1 km {0.62 mile}	0.1 km {0.06 mile}
Reset method	—	Push button
Characteristic	Indicates 1 km per 5,096 vehicle speed signal pulses Indicates 1 mile per 8,208 vehicle speed signal pulses	

37U0TX-532

INDICATION TOLERANCE
Speedometer

Vehicle speed {km/h}	Input pulses (per minute)	Meter indication {km/h}	Vehicle speed {MPH}	Input pulses (per minute)	Meter indication {MPH}
20	1,699	21—23	20	2,733	20—23
40	3,397	40—43	40	5,467	40—42
60	5,096	60—64	60	8,200	60—63
80	6,795	80—84	80	10,933	80—84
100	8,493	100—105	100	13,667	100—105
120	10,192	120—126	120	16,400	120—126
140	11,891	140—147	140	19,133	140—147
160	13,589	160—168	160	21,867	160—168
180	15,288	180—189	180	24,600	180—189
200	16,987	200—210			
220	18,685	220—231			
240	20,384	240—252			
260	22,082	260—273			
280	23,781	280—294			

37U0TX-533

Tachometer

Standard indication (rpm) ( ): AT model	Allowable indication (rpm) (Ambient temperature: 20°C {68°F})	
	MT model	AT model
700	650—750	920—1,020
2,000	1,800—2,100	1,810—2,110
3,000	2,800—3,100	2,800—3,100
4,000	3,750—4,050	3,820—4,020
5,000	4,750—5,050	4,700—5,000
6,000	5,850—6,150	5,820—6,120
7,000 (6,900)	6,900—7,200	6,780—7,020
7,400 (8,000)	7,280—7,520	7,750—8,050

37U0TX-534

Fuel Gauge

Indication	Input resistance values (Ω)
E	75.9
1/2	31.5
F	7.4

37U0TX-535

Water Temperature Gauge

General area spec.

Indication	Input resistance values (Ω)
C {54°C, 129°F}	178.4
Normal {70—105°C. 158—221°F}	95.4—32
H {130°C, 266°F}	16.9

37U0TX-536

Cold area spec.

Indication	Input resistance values (Ω)
C {47°C, 117°F}	240
Normal {70—105°C. 158—221°F}	95.4—32
H {121°C, 250°F}	21.1

Oil Pressure Gauge

Indication		Input resistance values (Ω)
{kgf/cm²}	{lb/in²}	
0	0	∞
4	60	28
8	120	10

37U0TX-537

SYSTEM DIAGRAM

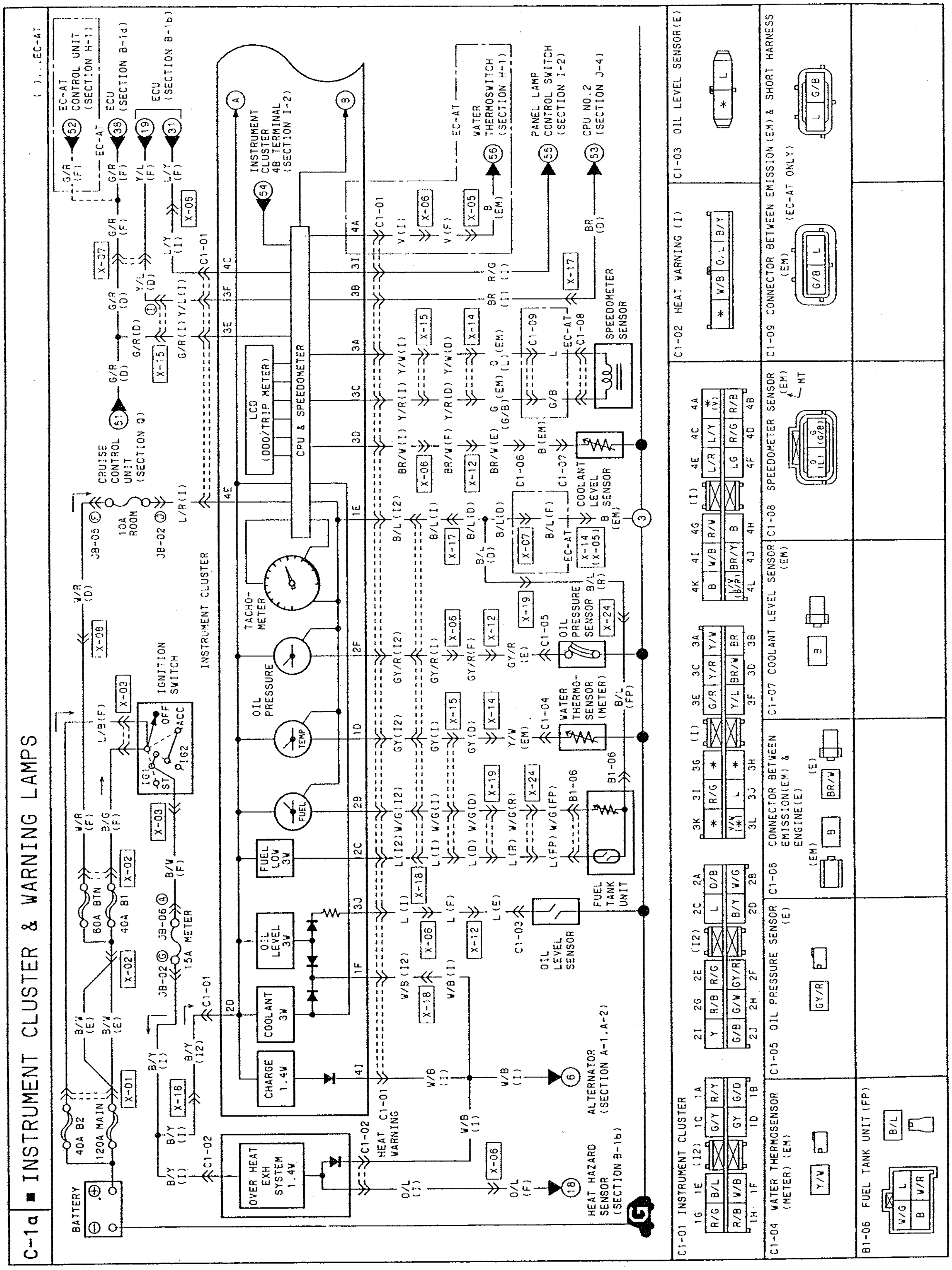

37U0TX-538

C-1b ■ INSTRUMENT CLUSTER & WARNING LAMPS

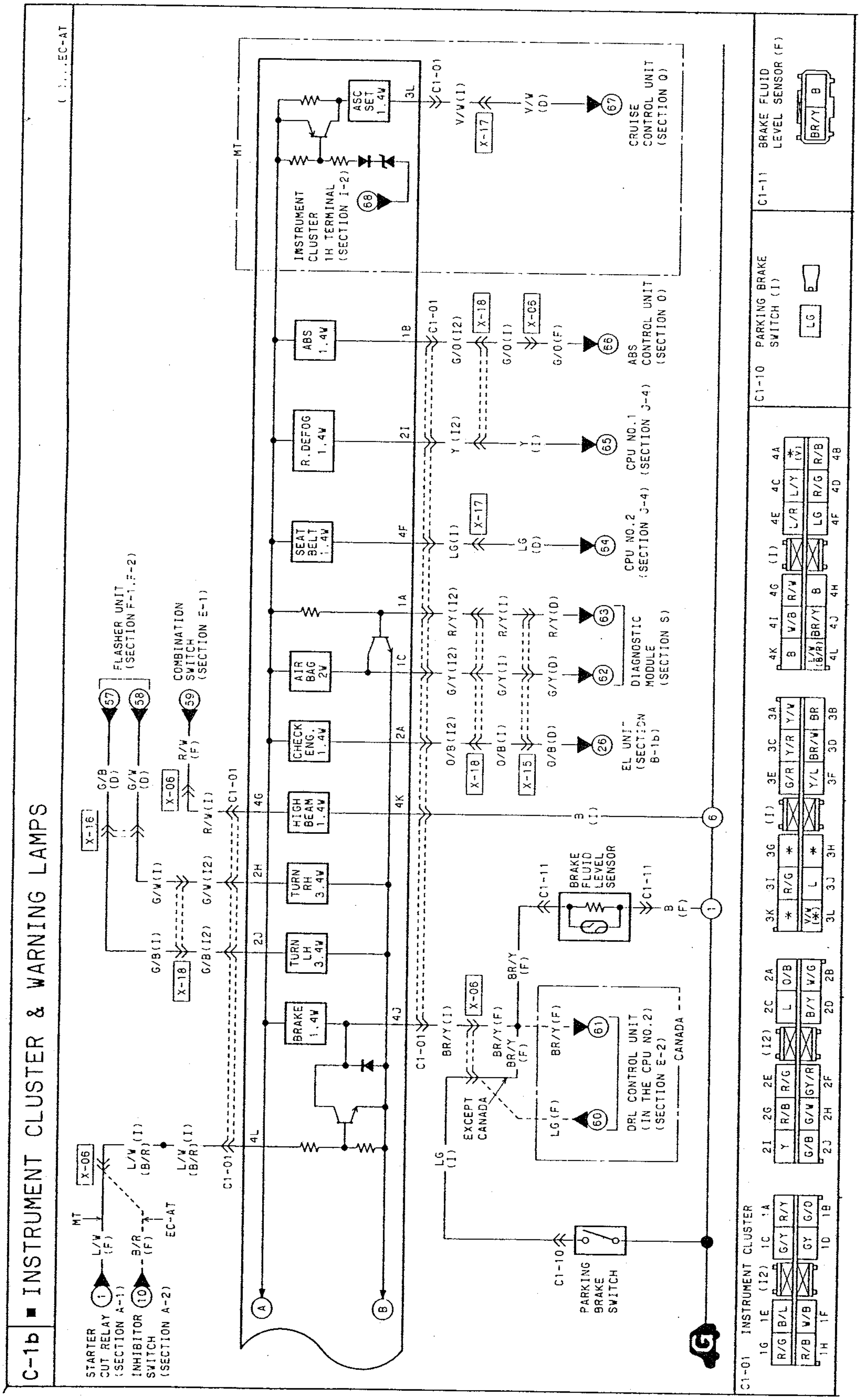

C-2 EC-AT

■ INSTRUMENT CLUSTER & WARNING LAMPS
■ SELECTOR INDICATOR LAMPS

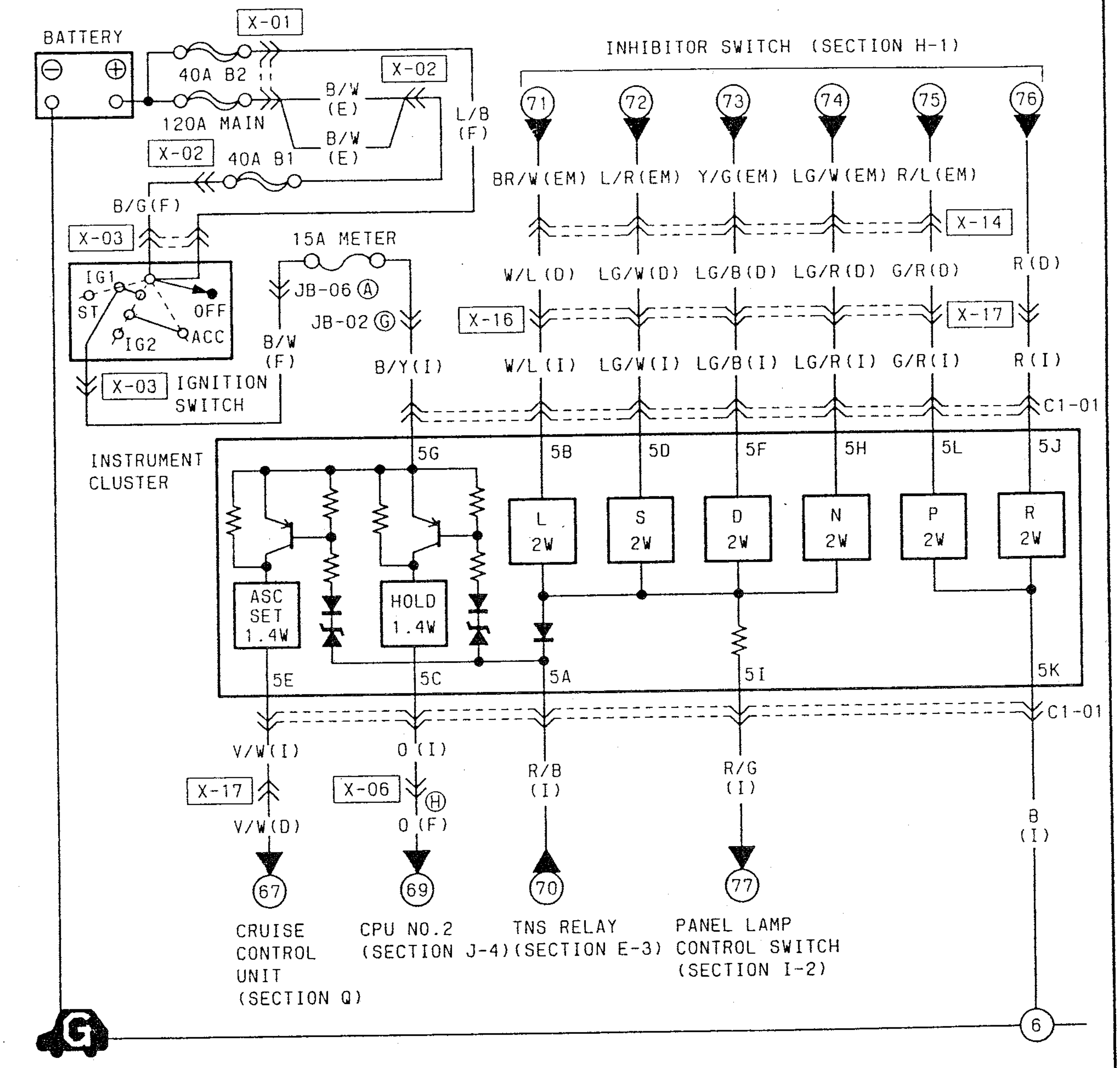

C1-01 INSTRUMENT CLUSTER (I)

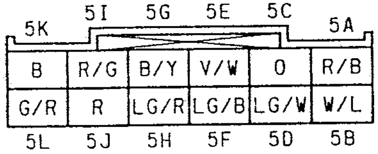

SPEEDOMETER

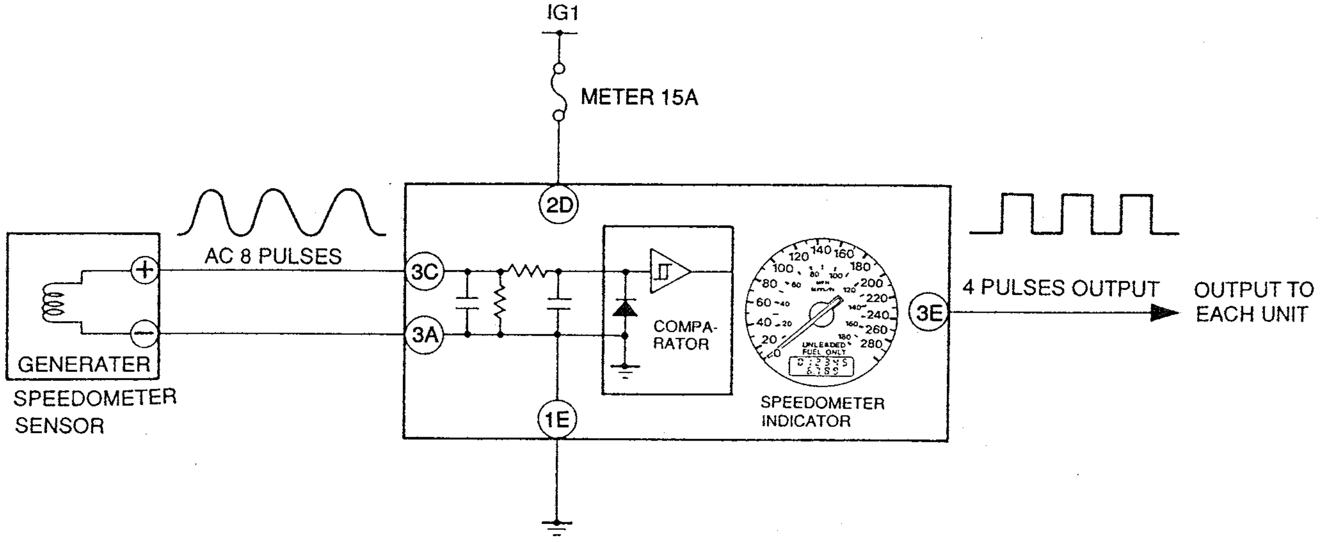

37U0TX-540

A electronic speedometer is used to reduce vehicle weight. A large analogue meter is used to improve visibility.

Operation
To move the indicator, the cross coil in the speedometer reacts to pulse signals received from the speedometer sensor attached to the transmission.

1. The pulse signals from the speedometer sensor turn the comparator ON and OFF, thus counting as the vehicle's speed signals.
2. Based on the amount of pulse signals input in a certain time period, the computing element determines the amount of current sent to the cross coils.
3. A magnetic field is produced by the current in the cross coils, moving the indicator to show the vehicle speed.

SPEEDOMETER SENSOR

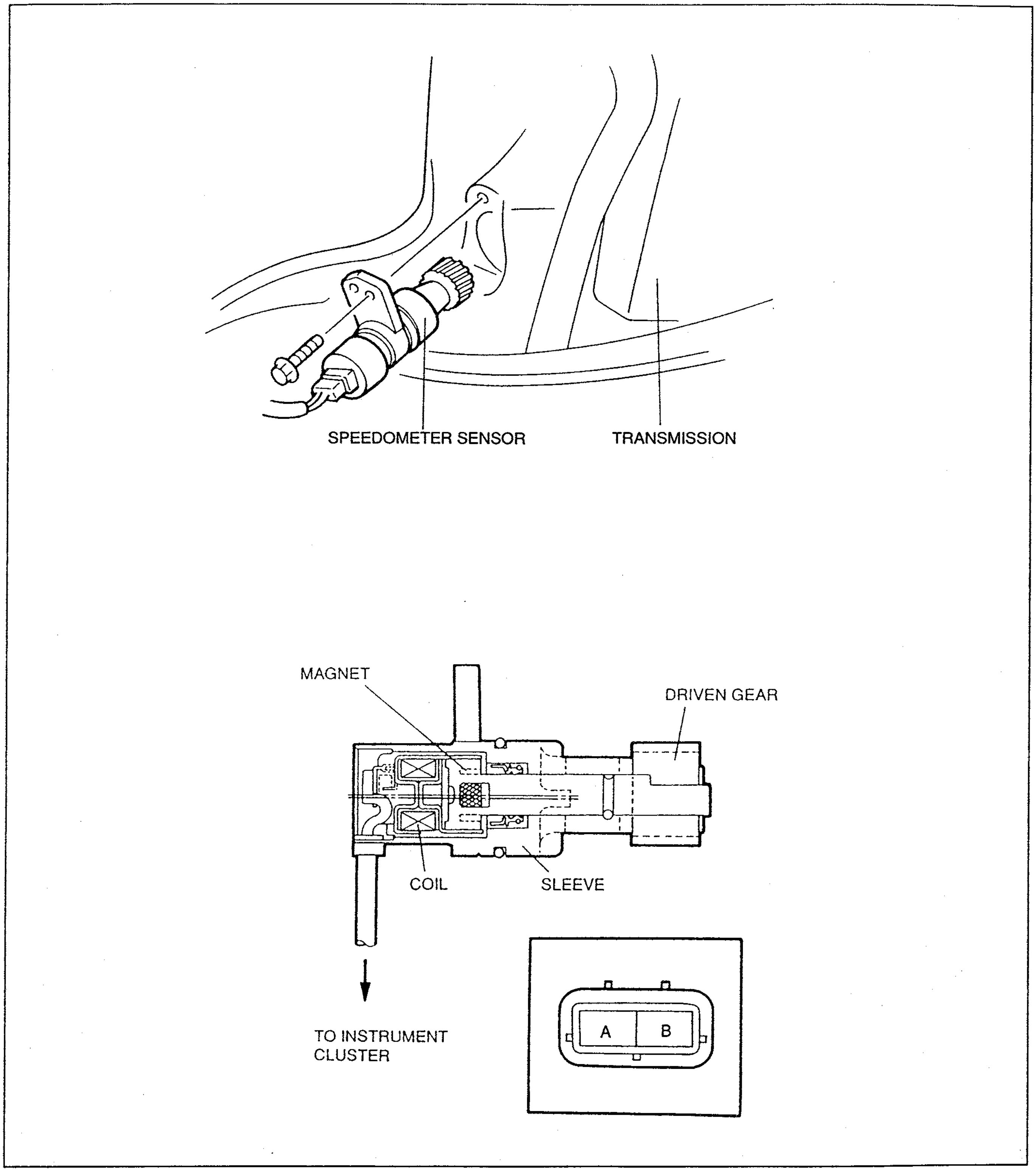

37U0TX-541

The speedometer sensor is driven by the output shaft of the transmission. This sensor sends eight pulses of alternating current signals to the instrument cluster per 1 rotation of the driven gear.

Operation

1. The speedometer sensor includes the driven gear, sleeve, and magnetic coil. The driven gear is turned by the output shaft of the transmission.
2. The plastic magnet rotates, changing the magnetic field in the coil.
3. The coil generate electricity as the magnetic field changes; eight alternating current pulses per rotation of the speedometer sensor driven gear are sent to the speedometer.

FUEL GAUGE

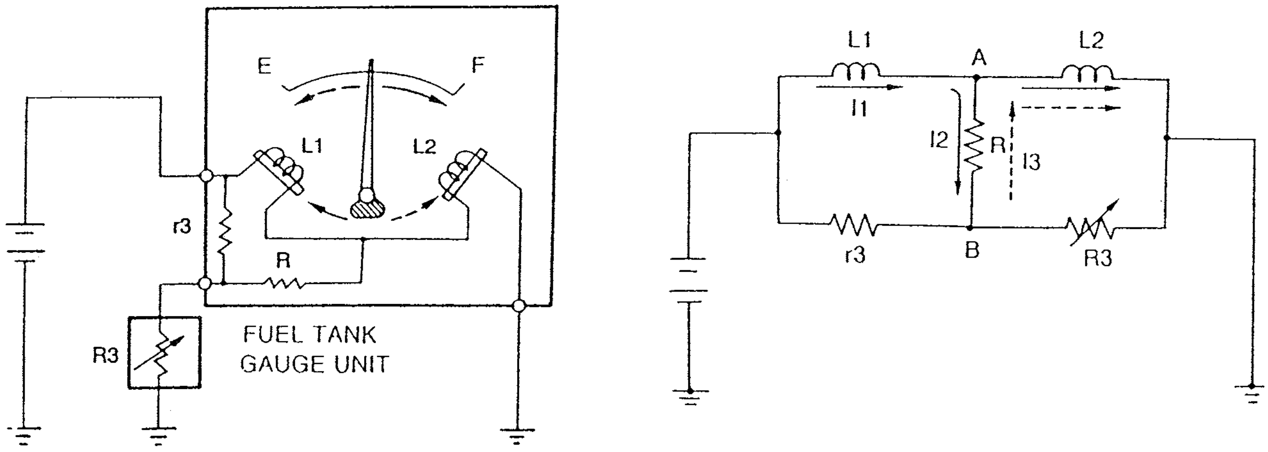

37U0TX-542

- The fuel gauge is a cross-coil, set needle type. It remains in position when the ignition switch is turned OFF.

Operation

- Within the fuel gauge, the movable iron piece is contained in silicone oil that acts as damper.
  The two coils generate magnetic force according to the current flowing through them.
  The movable iron piece is caused to move by the varying magnetic force of the coils.
- When the fuel level is high, the resistance (r_3) of the fuel gauge sender unit becomes lower, causing current (I_1) to become greater (magnetic force generated at coil L_1 becomes stronger), and current (I_2) to become smaller (magnetic force generated at coil L_2 becomes weaker).
  As a result, the movable iron piece is pulled in the direction of (L_1), overcoming the viscosity of the silicone oil. The indicator needle thus moves to indicate F.
- When the fuel level is low, the resistance (r_3) of the fuel gauge sender unit becomes higher, causing current (I_1) to become smaller (magnetic force generated at coil L_1 becomes weaker), and current (I_2) to become greater (magnetic force generated at coil L_2 becomes stronger).
  As a result, the movable iron piece is pulled in the direction of (L_2). The indicator needle thus moves to indicate E.
- When the ignition is switched OFF, the movable iron piece is held at the indicating position by the viscosity of the silicone oil.

WATER TEMPERATURE GAUGE

- The water temperature gauge is the cross-coil, mid-range-stability indication type. It indicates about mid-point on the gauge at the normal engine operating temperature range (approx. 70—105°C {158—221°F}) to reduce the worry of seeing the gauge at a high point.

37U0TX-543

CRUISE CONTROL SYSTEM

OUTLINE

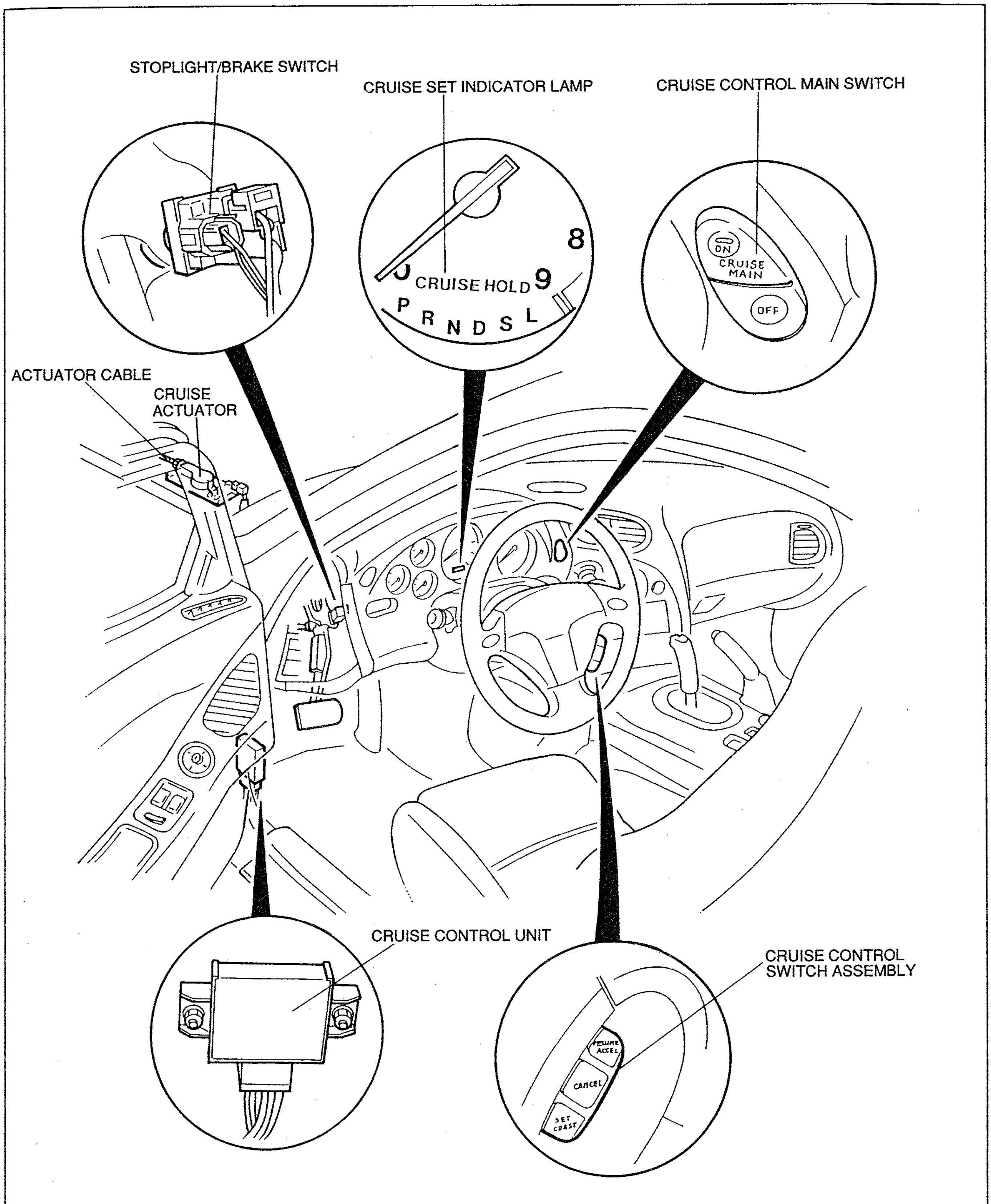

- The cruise control system enables the driver to maintain a set vehicle speed without operating the accelerator pedal.
- A motorized actuator is used to control vehicle speed by pulling/releasing the throttle linkage.

SYSTEM COMPONENTS AND FUNCTIONS

Component	Function	Note
Speedometer sensor	AC signals sent from speedometer sensor (attached to transmission) are transformed into AC signals in speedometer. Transformed vehicle speed signals are sent to cruise control unit.	
Cruise control unit	Microcomputer controls all functions including vehicle speed set, resume, coast (decelerate), and cancel. Control unit contains self-diagnosis function.	
Cruise actuator	Operates throttle linkage and adjusts vehicle speed based on control unit signals.	Motor type
Cruise control main switch	Controls ON/OFF of cruise control system main power.	
SET/COAST switch	SET........Determines cruise control setting speed. COAST...Pressing and holding switch decreases set speed.	Cruise control switch in steering wheel
RESUME/ACCEL switch	RESUME...Returns vehicle to set speed if vehicle speed is 40 km/h {25 MPH} or more after cruise control is temporarily cancelled. ACCEL...... Pressing and holding switch increases set speed.	
CANCEL switch	Cancels cruise control setting.	
Stoplight switch	Control discontinues to slow down vehicle speed when brake pedal is pressed.	
Brake switch	Control discontinues to slow down vehicle speed when brake pedal is pressed.	
Clutch switch (MT)	Cancels cruise control setting when clutch pedal is pressed.	
Inhibitor switch (AT)	Cancels cruise control setting when selector lever shifted to P or N range.	

37U0TX-545

SYSTEM DIAGRAM

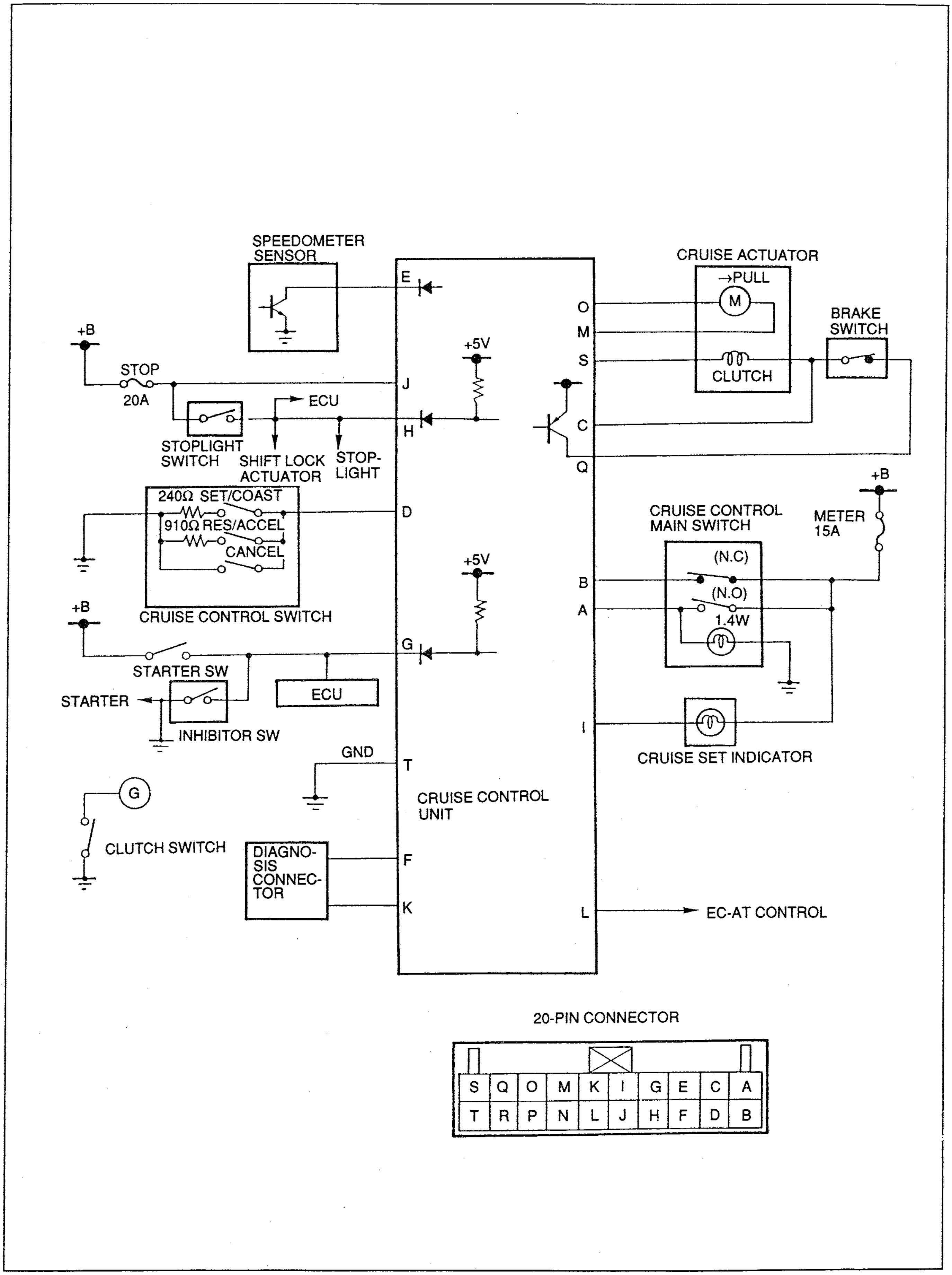

37U0TX-546

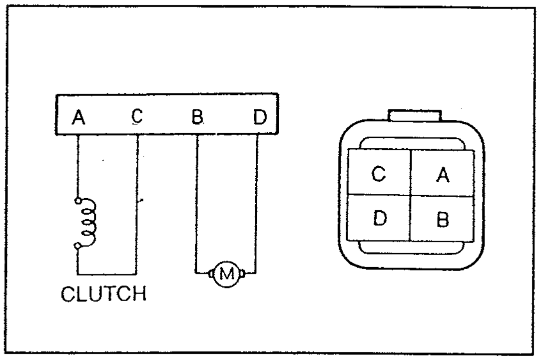

37U0TX-548

CRUISE CONTROL ACTUATOR

- The actuator includes the motor, electromagnetic clutch, reduction gear, drive gear, and drive shaft.
- The motor can rotate in either direction by changes in the polarity of the power source.
- The electromagnetic clutch connects the drive gear and drive shaft (when there is current) and transfers the motor torque to the drive shaft.

Mode and actuator current

Mode	Terminal			
	Acceleration	Decele ration	Hold	Cancel
Motor (current direction)	B → D	D → B	—	D → B
Clutch	ON	ON	ON	OFF

SELF-DIAGNOSIS FUNCTION

- The self-diagnosis functions are the Condition Detection Mode which indicates troubles in the system, and the Operation Mode which checks for and indicates correct operation of the input signals to the control unit.
- The Condition Detection Mode check is performed by either of the following methods;
  1) Checking output of the diagnosis connector by using the Self-Diagnosis Checker (49 H018 9A1) and the System Selector (49 B019 9A0), or the DT-S1000 Base Unit (49 F088 001).
  2) Checking the flashing pattern of the Cruise set indicator lamp in the instrument cluster.
- The Operation Mode check is performed by either of the following methods;
  1) Checking output of the diagnosis connector by using the DT-S1000 Base Unit (49 F088 001).
  2) Checking the flashing pattern of the Cruise set indicator lamp in the instrument cluster.

37U0TX-549

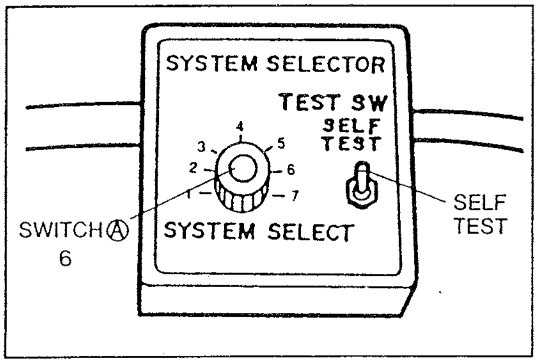

37U0TX-550

Condition Detection Mode
Using Self-Diagnosis Checker
Preparation

1. Connect the **SST** (System Selector) to the diagnosis connector.
2. Set System Selector switch Ⓐ to position **6.**
3. Set the test switch at **SELF-TEST (up).**

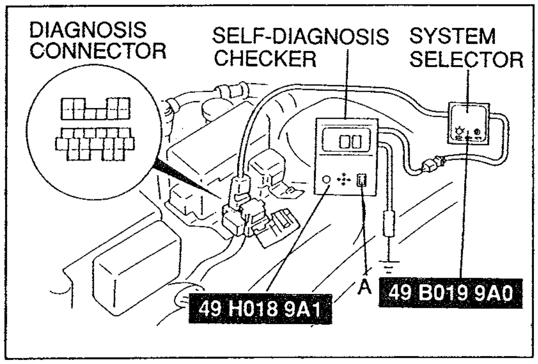

37U0TX-551

4. Connect the **SST** (Self-Diagnosis Checker) to the System Selector and ground the black clip to the vehicle.
5. Set the Self-Diagnosis Checker switch to position **A.**

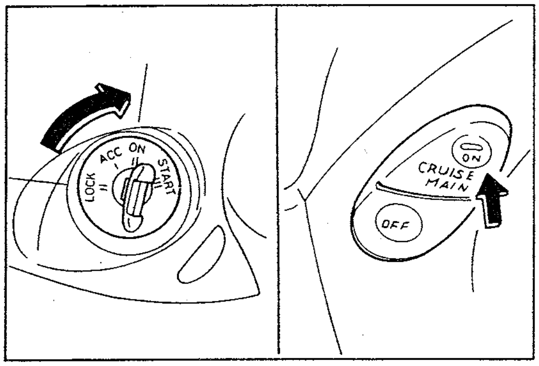

37U0TX-552

Inspection

1. Turn ON the ignition switch while hold ON the cruise control main switch. (The Cruise set indicator lamp will come on.)
2. Verify that the Self-Diagnosis Checker buzzers and that Service Code **88** flashes for **3 seconds** after turning ON the ignition switch.

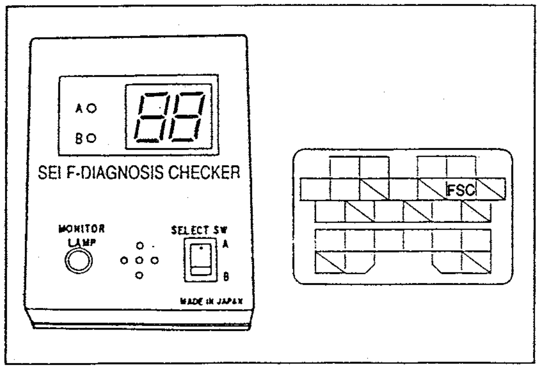

37U0TX-553

Note

- **If 88 does not flash, check the power supply units and related wiring harnesses and connectors.**
- **If 88 flashes and the buzzer sounds continuously for more than 20 seconds, check for a short circuit between the cruise control unit terminal K and the diagnosis connector terminal FSC. Replace the cruise control unit if necessary and inspect again.**

3. When Service Code **00** is indicated following Code **88**, the system is operating normally.

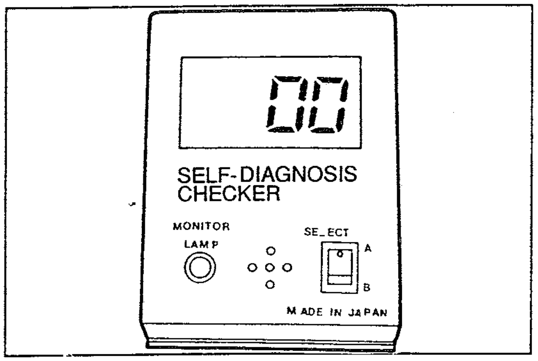

37U0TX-554

4. If there is a system malfunction, a different Service Code will appear.
5. Repair or replace the failed part, and repeat the previous steps until Code **00** is indicated.

Cancel

The Condition Detection Mode is canceled by performing one of the following:

- Turn off the cruise control main switch. (The Cruise set indicator lamp goes off.)
- Turn OFF the ignition switch.
- Drive the vehicle at over 16 km/h {10 MPH} or faster.
- Disconnect the **SSTs** (system selector and self-diagnosis checker).

Using DT-S1000 Base Unit

Preparation

Connect the **SST** (DT-S1000) to the diagnosis connector.

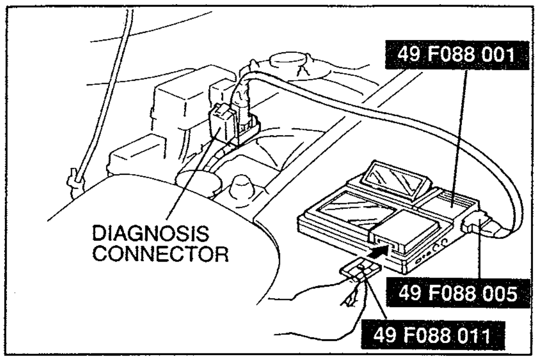

37U0TX-555

Note

- **Refer to the DT-S1000 operation manual for operation procedures.**

Inspection

1. Turn ON the ignition switch while holding ON the cruise control main switch. (The Cruise set indicator lamp will come on.)

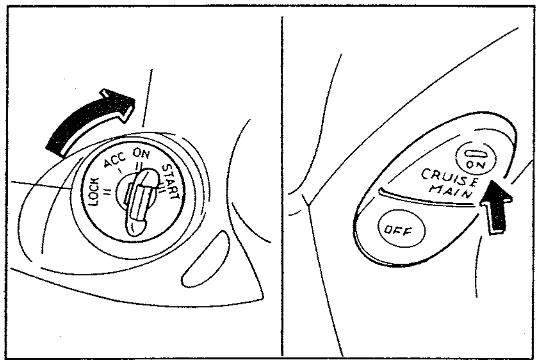

37U0TX-556

Note

- **When "No service codes." is shown on the display of the DT-S1000, no problem exists in the components in the Service Codes List. (Refer to page T–38.)**
- **When "System error." is shown, check the SST's connection. When the connection is assured, proceed with troubleshooting, referring to the SST operation manual.**

2. When problems exist in the system, Service Codes are shown on the display of the DT-S1000.
3. Repair or replace the failed part and repeat the previous steps until no Service Code is displayed.

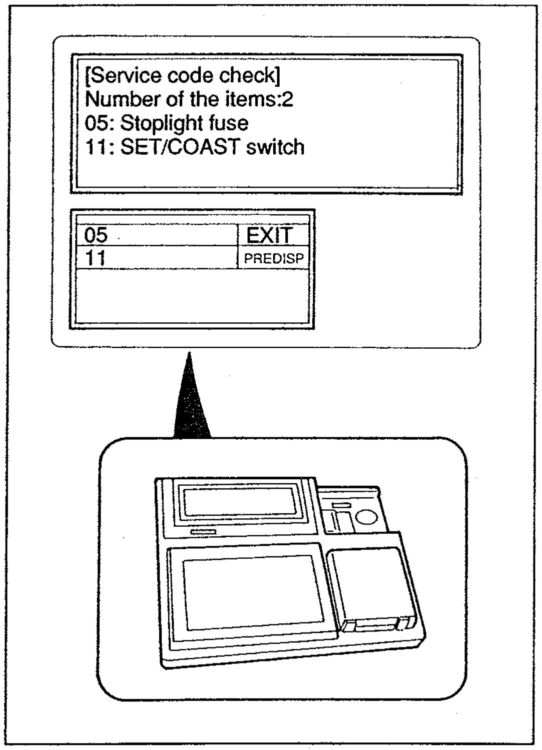

[Service code check]
Number of the items:2
05: Stoplight fuse
11: SET/COAST switch

05
11

37U0TX-557

Cancel

The Condition Detection Mode is canceled by performing one of the following:

- Turn OFF the cruise control main switch. (The Cruise set indicator lamp goes off.)
- Turn OFF the ignition switch.
- Touch the EXIT key on the display.
- Drive the vehicle at over 16 km/h {10 MPH}.

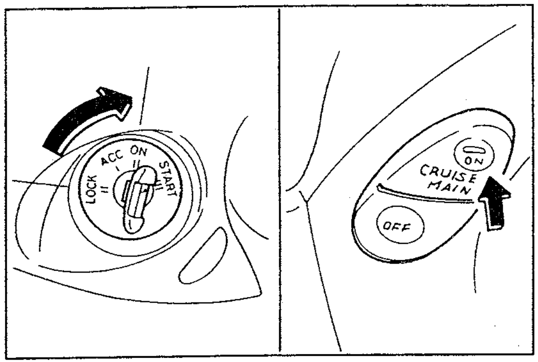

37U0TX-558

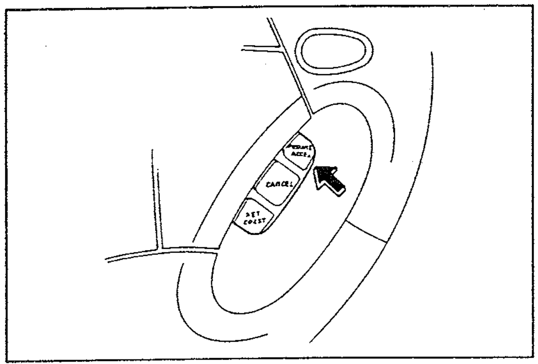

37U0TX-559

Using Cruise Set Indicator Lamp Inspection

1. Turn ON the ignition switch.
2. Turn ON the cruise control main switch.
   (The Cruise set indicator lamp will come on.)
3. Press and hold the RESUME/ACCEL switch for at least 3 seconds.
   (The Cruise set indicator lamp will light for 3 seconds, go out for 2 seconds, and then begin flashing if a problem present.)
4. The self-diagnosis system will be activated and the Cruise set indicator lamp will flash if a problem is present.
5. Note the Service Code number(s).
   (Refer to the chart at the bottom of the page.)

Note
- **When no problem exists in the system, the Cruise set indicator lamp will not flash.**
- **If there is more than one malfunction, the code numbers will be indicated in numerical order.**

Cancel

The Condition Detection Mode is canceled by performing one of the following.
- Turn OFF the cruise control main switch. (The Cruise set indicator lamp goes off.)
- Turn OFF the ignition switch.
- Drive the vehicle at over 16 km/h {10 MPH}.

Condition Detection Mode Malfunction Self-Diagnosis

The Cruise set indicator lamp will flash if a malfunction is present.

Flash pattern (Cruise set indicator lamp)	Code No.	Possible Cause	Action
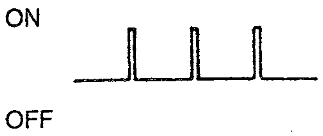	01	Defective wiring (Actuator—Cruise control unit; Brake switch—Cruise control unit) Defective ground or wiring (Cruise control unit—Ground) Defective actuator or brake switch	Repair harness Inspect ground circuit condition Inspect actuator Inspect brake switch
	05	STOP 20A fuse blown Defective wiring (Fuse—Cruise control unit)	Replace fuse Repair harness
	07	Stoplight switch and brake switch are ON simultaneously	Inspect stoplight switch Inspect brake switch
	11	Defective cruise control switch (SET/ COAST) (Always ON)	Inspect cruise control switch
	12	Defective Cruise control switch (RESUME/ ACCEL) (Always ON)	Inspect cruise control switch
	15	Defective cruise control unit	Replace cruise control unit

37U0TX-560

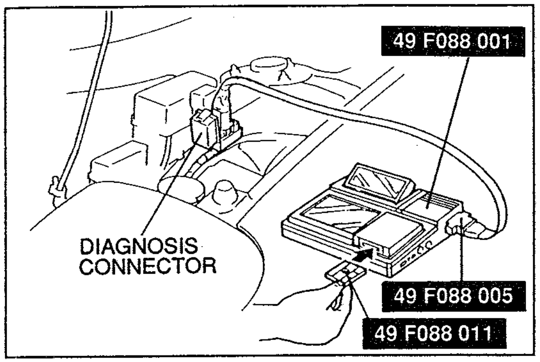

37U0TX-561

Operation Mode
Using DT-S1000 Base Unit
Preparation

Connect the **SST** (DT-S1000) to the diagnosis connector.

Note
- **Refer to the DT-S1000 operation manual for the operation procedures.**

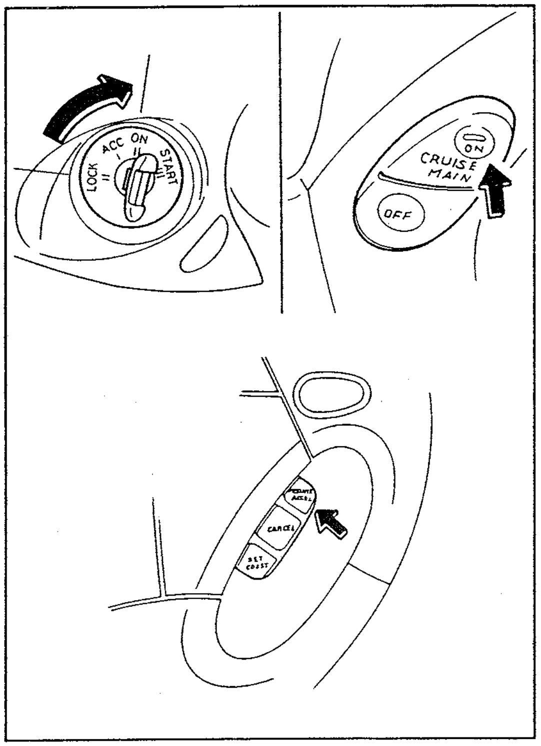

37U0TX-562

Inspection

1. Shift the transmission to D or R range. (AT)
   Shift the transmission to any gear except neutral. (MT)
2. Turn ON the ignition switch, while holding ON the cruise control main switch and RESUME/ACCEL switch.
   (The Cruise set indicator lamp will come on.)

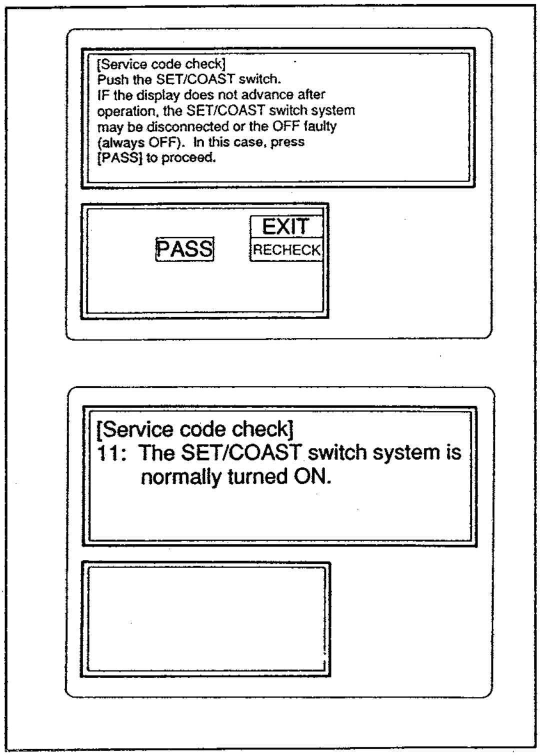

[Service code check]
Push the SET/COAST switch.
IF the display does not advance after operation, the SET/COAST switch system may be disconnected or the OFF faulty (always OFF). In this case, press [PASS] to proceed.

[Service code check]
11: The SET/COAST switch system is normally turned ON.

37U0TX-563

3. Operate each switch according to the directions shown on the display of the DT-S1000, and verify output of the Operation Codes. (Refer to page T–40.)

Cancel

The Operation Mode is canceled by performing one of the following:
- Turn OFF the cruise control main switch. (The Cruise set indicator lamp goes off.)
- Turn OFF the ignition switch.
- Touch the EXIT key on the display.

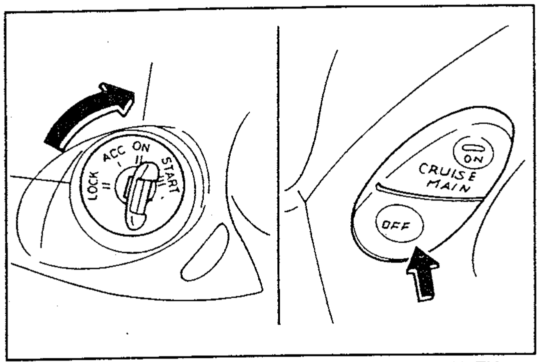

37U0TX-564

Using Cruise Set Indicator Lamp Inspection

1. Turn ON the ignition switch.
2. Verify that the cruise control main switch is OFF. (The Cruise set indicator lamp goes off.)
3. Shift the transmission to D or R range. (AT)
   Shift the transmission to any gear except neutral. (MT)

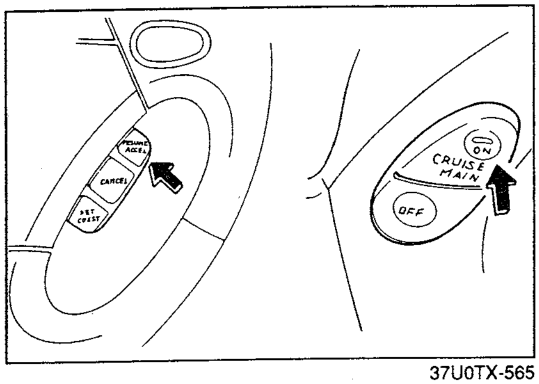

37U0TX-565

4. Press the RESUME/ACCEL switch and the cruise control main switch simultaneously to activate system inspection. (The Cruise set indicator lamp will come on.)
5. Operate each switch as described below and verify the Operation Codes.

Cancel

The Operation Mode is canceled by performing one of the following:

- Turn OFF the cruise control main switch. (The Cruise set indicator lamp goes off.)
- Turn OFF the ignition switch.

Operation Mode Inspection of Cruise Control System

The Cruise set indicator lamp will flash if the system is operating correctly.
If the lamp fails to flash, inspect the system as shown.

Procedure	Normal		Malfunction	
	Output signal (Cruise set indicator lamp)	Code No.	Possible Cause	Action
Press SET/ COAST switch		21	Defective cruise control switch Defective wiring (Control unit—SET/COAST switch—Ground)	Inspect cruise control switch Repair harness
Press RESUME/ ACCEL switch		22	Defective RESUME/ACCEL switch Defective wiring (Control unit—RESUME/ACCEL switch—Ground)	Inspect cruise control switch Repair harness
Press brake pedal		31	Defective stoplight switch Defective wiring (Control unit—Stoplight switch—Ground)	Inspect stoplight switch Repair harness
Turn ON • Ignition switch shift • Shift transmission to P or N range (AT) • Depress clutch pedal or shift transmission to neutral position (MT)		35	Defective inhibitor switch (AT) Defective wiring (Control unit—Inhibitor switch—Clutch switch—Control unit) Defective clutch switch (MT)	Inspect inhibitor switch (AT) Repair harness Inspect clutch switch (MT)
Drive vehicle above 40 km/h {25 MPH}		37	Defective speedometer sensor or speedometer Defective wiring (Control unit—Speedometer—Speedometer sensor)	Inspect speedometer sensor Inspect speedometer Repair harness

37U0TX-566

AUDIO

OUTLINE

STANDARD SYSTEM (TYPE 1)

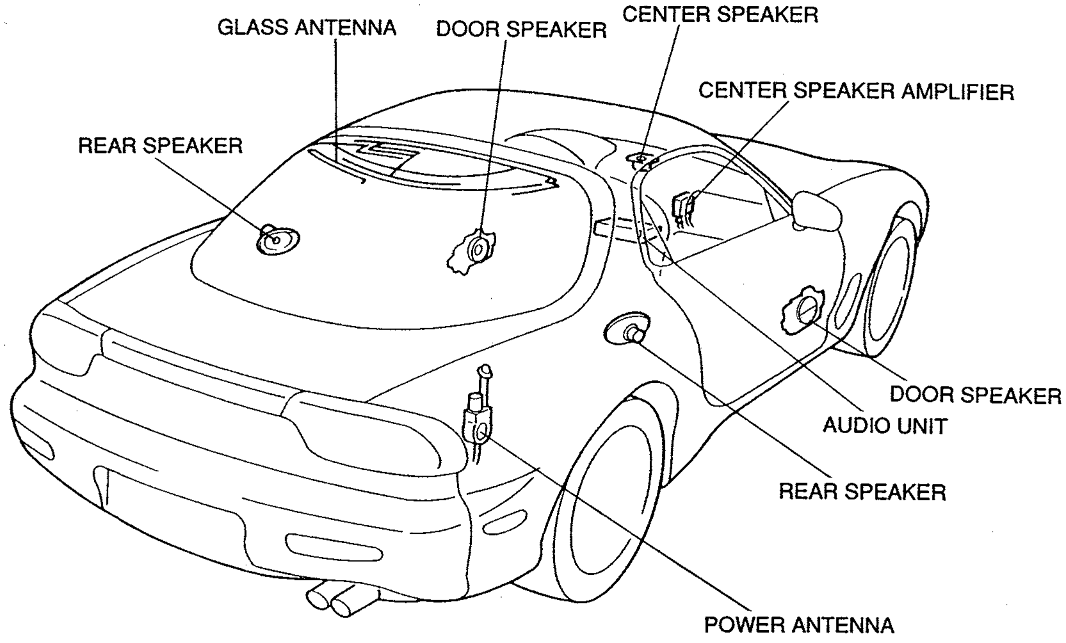

BOSE ACOUSTIC WAVE® MUSIC SYSTEM (TYPE 2)

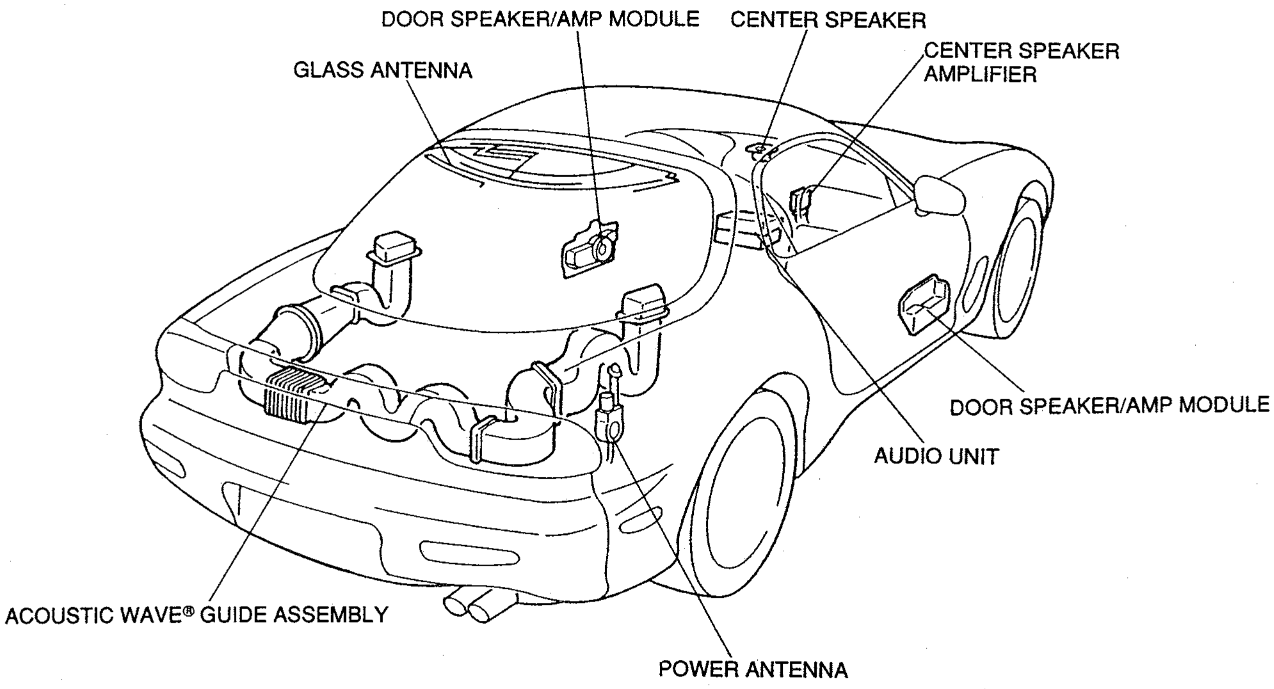

37U0TX-567

Two audio systems are available. With Type 2, the Bose Acoustic Wave® Music System, powerful bass reproduction with lower distortion than previous car audio systems and true fidelity are provided.

SYSTEM DIAGRAM

TYPE 1

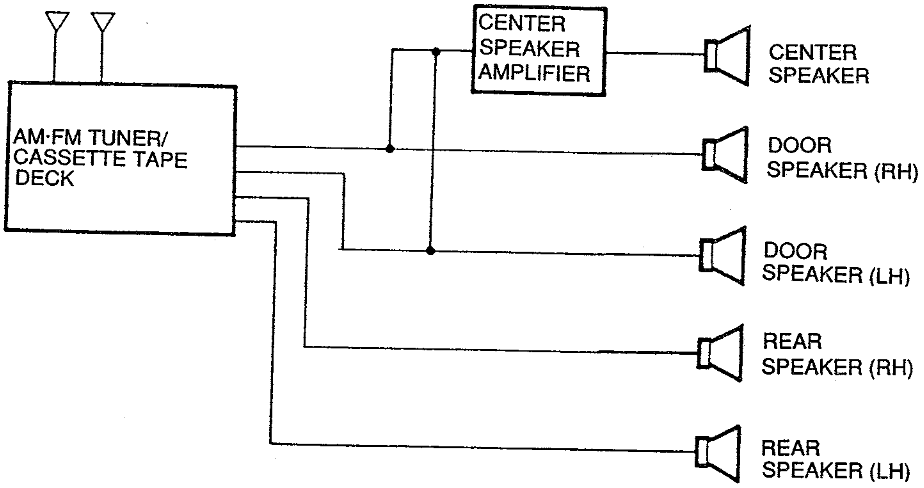

TYPE 2

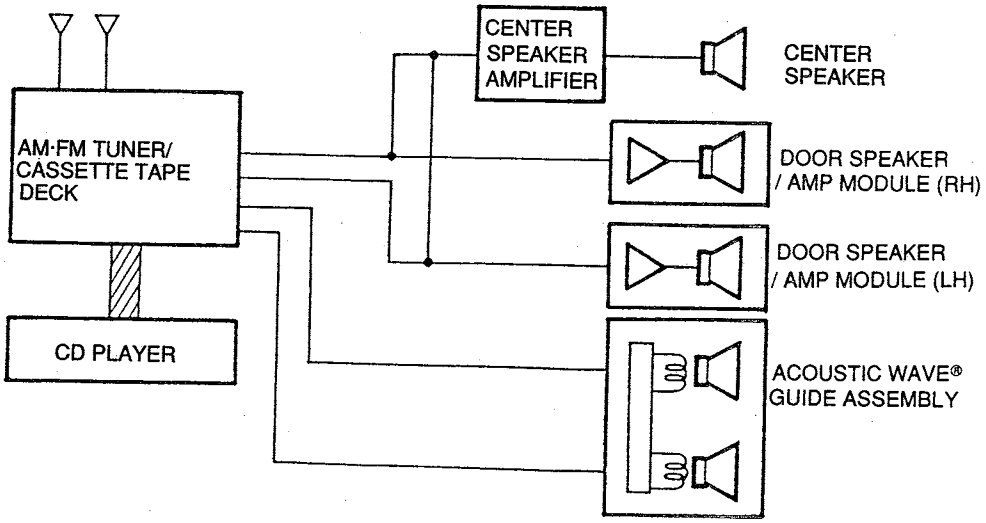

37U0TX-568

SPECIFICATION

AM·FM Tuner/Cassette Tape Deck (Type 1)

Rated Voltage	12V
Frequency band	AM 530—1,710 KHz FM 87.75—107.9 MHz
Max. output	25W × 4

37U0TX-569

AM·FM Tuner/Cassette Tape Deck (Type 2)

Rated Voltage	12V
Frequency band	AM 530—1,710 KHz FM 87.75—107.9 MHz

37U0TX-570

Compact Disc (CD) Player

Rated voltage	12V
CD type	8 cm (single size)/12 cm (regular size) CD

37U0TX-571

Center Speaker Amplifier

Max. output	Type 1	25W × 1
	Type 2	15W × 1

37U0TX-572

Speaker

(Type 1)

	Center speaker	Door speaker	Rear speaker
Structure	Single cone	Double cone	Double cone
Diameter cm {in}	8 {3.15}	16 {6.30}	14 × 19 {5.5 × 7.5}
Number equipped	1	2	2
Type	Mid- and high-range	Full-range	Full-range
Max. input {W}	25 × 1	25 (each)	25 (each)
Built-in amplifier	No	No	No
Impedance {Ω}	4	4	4

37U0TX-573

(Type 2)

	Center speaker	Door speaker/Amp module	Acoustic Wave® Guide Assembly
Structure	Single cone	Single cone	Single cone
Diameter cm {in}	6.4 {2.5}	11.4 {4.5}	16.5 {6.5}
Number equipped	1	2	2
Type	Mid- and high-range	Full-range	Woofer
Impedance {Ω}	4	1	1 (each)
Amplifier location	External (in console)	Internal	Internal
Amplifiers/Device	1	2	2
Max Amplifier input {V}	5.5	5.5 (each)	5.5
Amplifier output {W}	15	50 (each)	50 × 2

37U0TX-574

STANDARD SYSTEM (Type 1)

- The standard system drives five speakers (two door speakers, two rear speakers, and a center speaker) for powerful sound production.

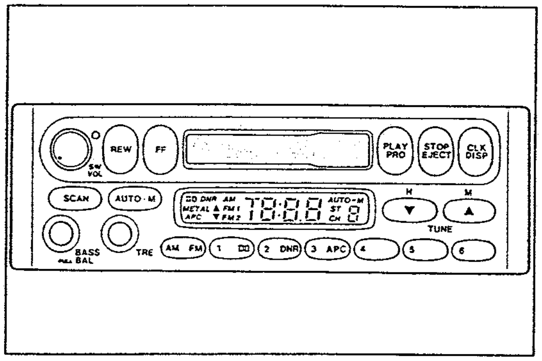

37U0TX-575

AM·FM Tuner/Cassette Tape Deck

- The preset function allows storing the frequencies of up to 15 stations (5 stations each for AM, FM1, and FM2).
- The automatic memory function searches for and memorizes the frequencies of up to 18 (6 stations each for AM, FM1, and FM2) of the strongest stations.
- The APC (automatic program control) function enables search of the beginning of the desired program during play of a cassette tape .
- The cassette tape automatic detection function detects the tape type and displays METAL when a metal or chromium tape is inserted.
- The display function displays the total time of playback, fast forward, and rewind of a tape.

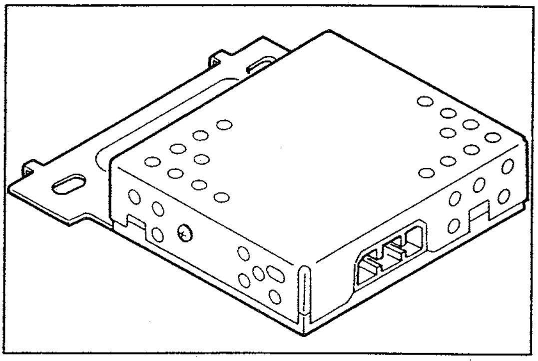

37U0TX-576

Center Speaker Amplifier

- The amplifier for the center speaker is mounted under the dashboard at the passenger side of center.

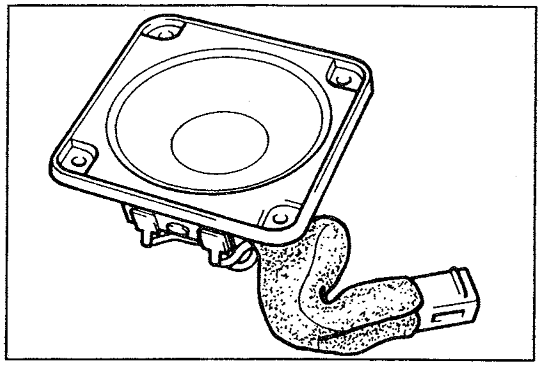

37U0TX-577

Center Speaker

- A center speaker is mounted in the middle of the dashboard. This speaker is exclusively for the mid- and high-range tones and provides improved stereophonic reproduction in the front of the passenger compartment.

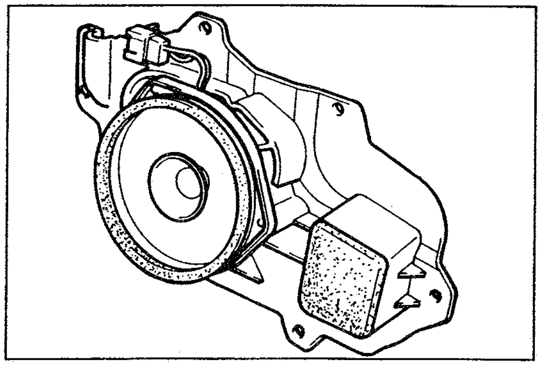

37U0TX-578

Door Speaker

A large-diameter speaker is mounted in each door.

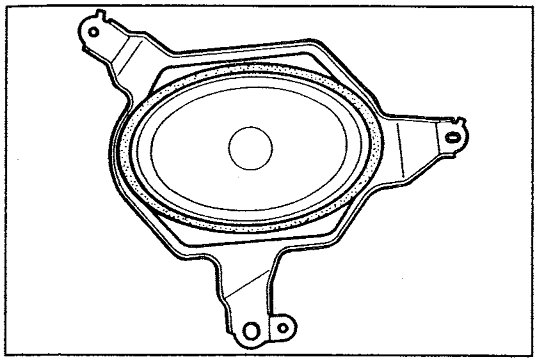

37U0TX-579

Rear Speaker

A full-range speaker is mounted in each rear seat quarter trim.

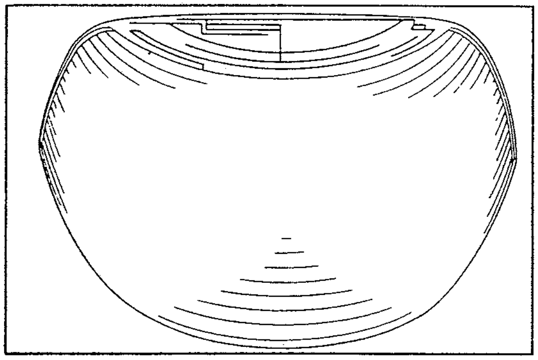

37U0TX-580

Glass Antenna (Type 1, Type 2)

A glass-mounted antenna is employed to pick up FM stations.
A diversity system is used to reduce the occurrence of multipath noise in FM reception.
The diversity in the audio unit selects the use of the glass-mounted antenna or the pole antenna.
Whichever gives the best reception is used.

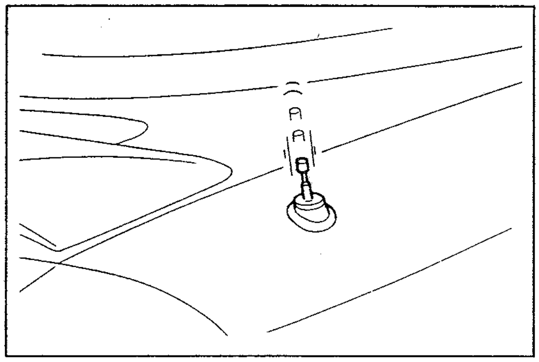

37U0TX-581

Power Antenna (Type 1, Type 2)

An electric pole antenna is fitted to the rear of the vehicle.
When the radio is turned ON or OFF the antenna extends or retracts.

BOSE ACOUSTIC WAVE® MUSIC SYSTEM (Type2)

- The Bose Acoustic Wave® Music System is custom designed for the vehicle to make the passenger compartment a veritable audio room. It consists of the Audio Unit, door speaker with built-in amplifier modules, center speaker with amplifier module, and the Acoustic Wave® Guide Assembly.

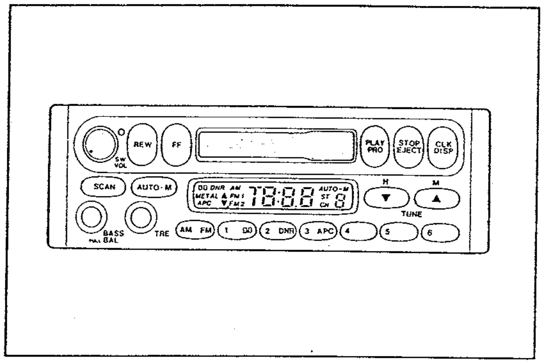

37U0TX-582

AM·FM Tuner/Cassette Tape Deck

- The preset function allows storing the frequencies of up to 15 stations (5 stations each for AM, FM1, and FM2).
- The automatic memory function searches for and memorizes the frequencies of up to 18 (6 stations each for AM, FM1, and FM2) of the strongest stations.
- The APC (automatic program control) function enables search of the beginning of the desired program during play of a cassette tape.
- The cassette tape automatic detection function detects the tape type and displays METAL when a metal or chromium tape is inserted.
- The display function displays the total time of playback fast forward, and rewind of a tape.
- The DNR (dynamic noise reduction) function reduces the high-range noise in the tone during play of a tape.
- A special audio unit for the Acoustic Wave® Music System is provided. This unit operates at pre-amp output levels because the amplifiers for the system are distributed. There is no fader control in this unit because there are no high frequencies produced in the Acoustic wave® Guide Assembly.

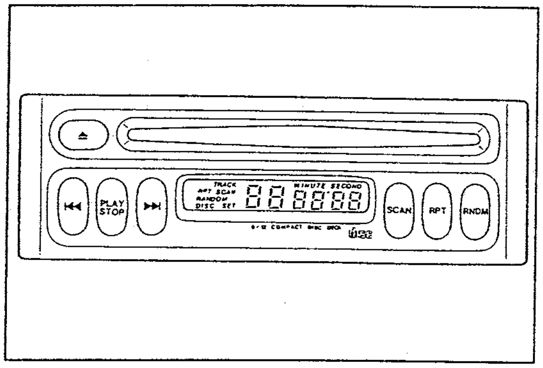

37U0TX-583

Compact Disc (CD) Player

- The thin-style CD player can play 8cm (single size) and 12cm (regular size) compact discs.
- The repeat function allows repeated playback of a selected tune.
- The random function provides playback of the tunes in a random order.

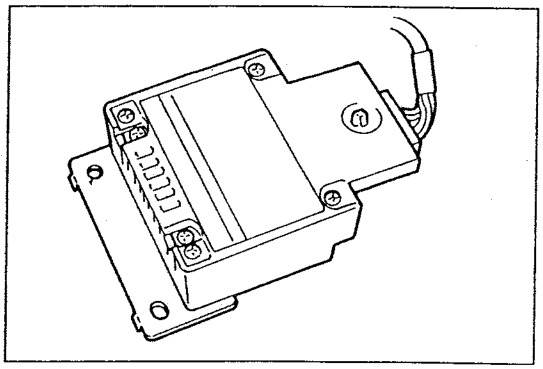

37U0TX-584

Center Speaker Amplifier

- The amplifier for the center speaker is mounted under the dashboard at the passenger side of center.
- The amplifier is a low power type which requires a small radiating surface and is lighter than larger units.

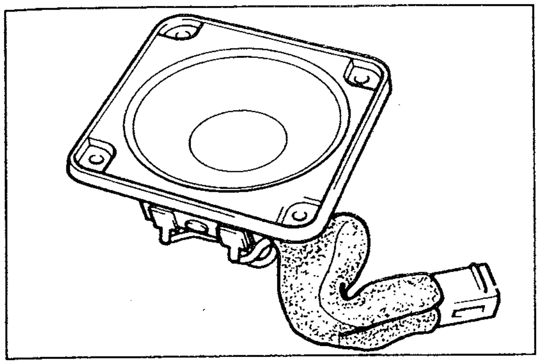

37U0TX-585

Center Speaker

- A center speaker is mounted in the middle of the dashboard. This speaker is exclusively for the mid- and high-range tones and provides improved stereophonic reproduction in the front of the passenger compartment.
- The tweeter/mid-range hybrid speakers provide undistorted sound in the high-frequency range, recreating sound close to a live performance.

Door Speaker

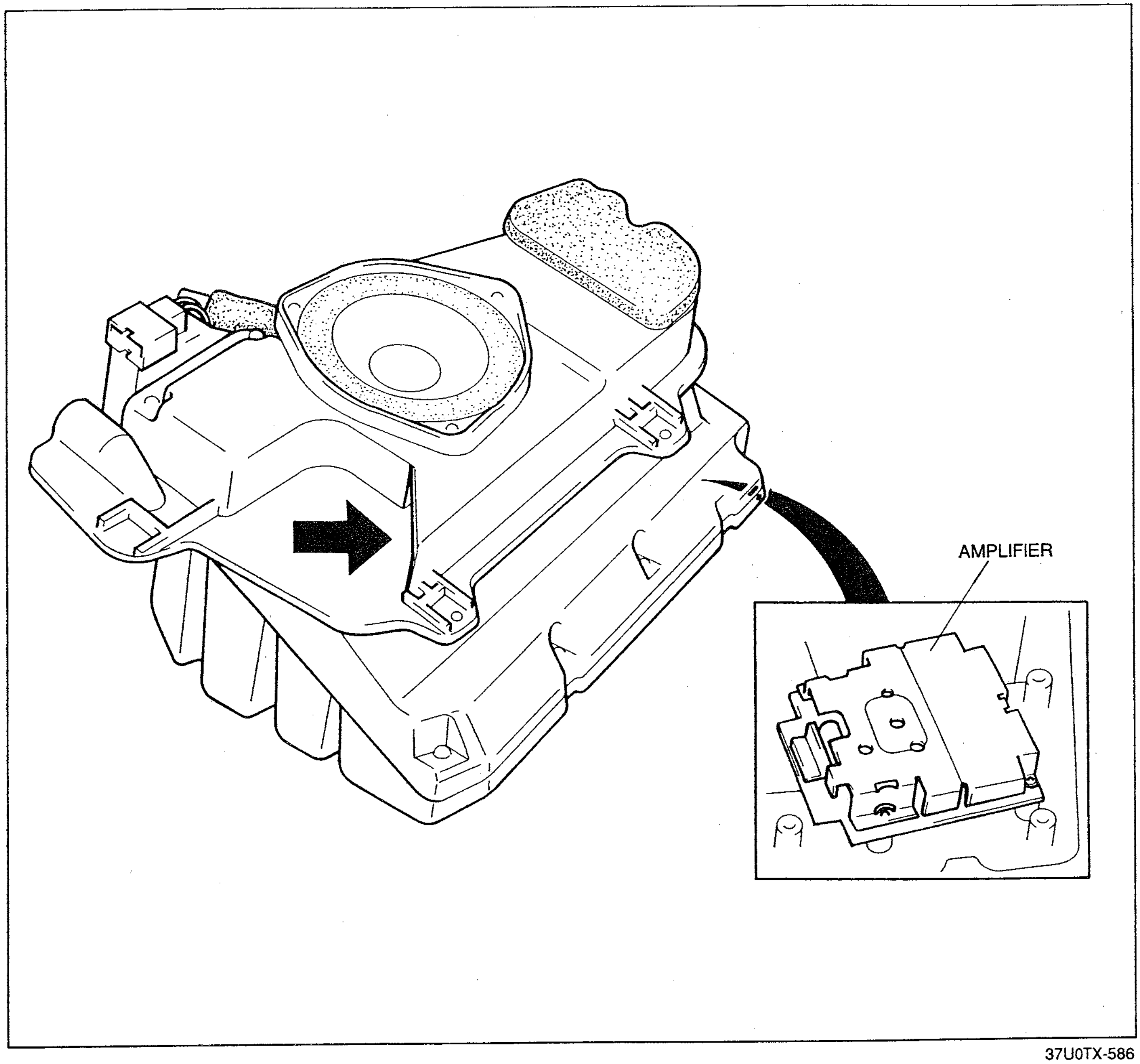

37U0TX-586

The door speakers consist of 4.5" Helical Voice Coil Full-Range Drivers mounted in a bass-reflex ported tuned enclosures custom designed for the doors.
These enclosures enable large output with low distortion from relatively small speakers. Powerful switch mode type amplifier modules in the enclosures tailor the input signal to the precise output characteristics desired.

Acoustic Wave® Guide Assembly

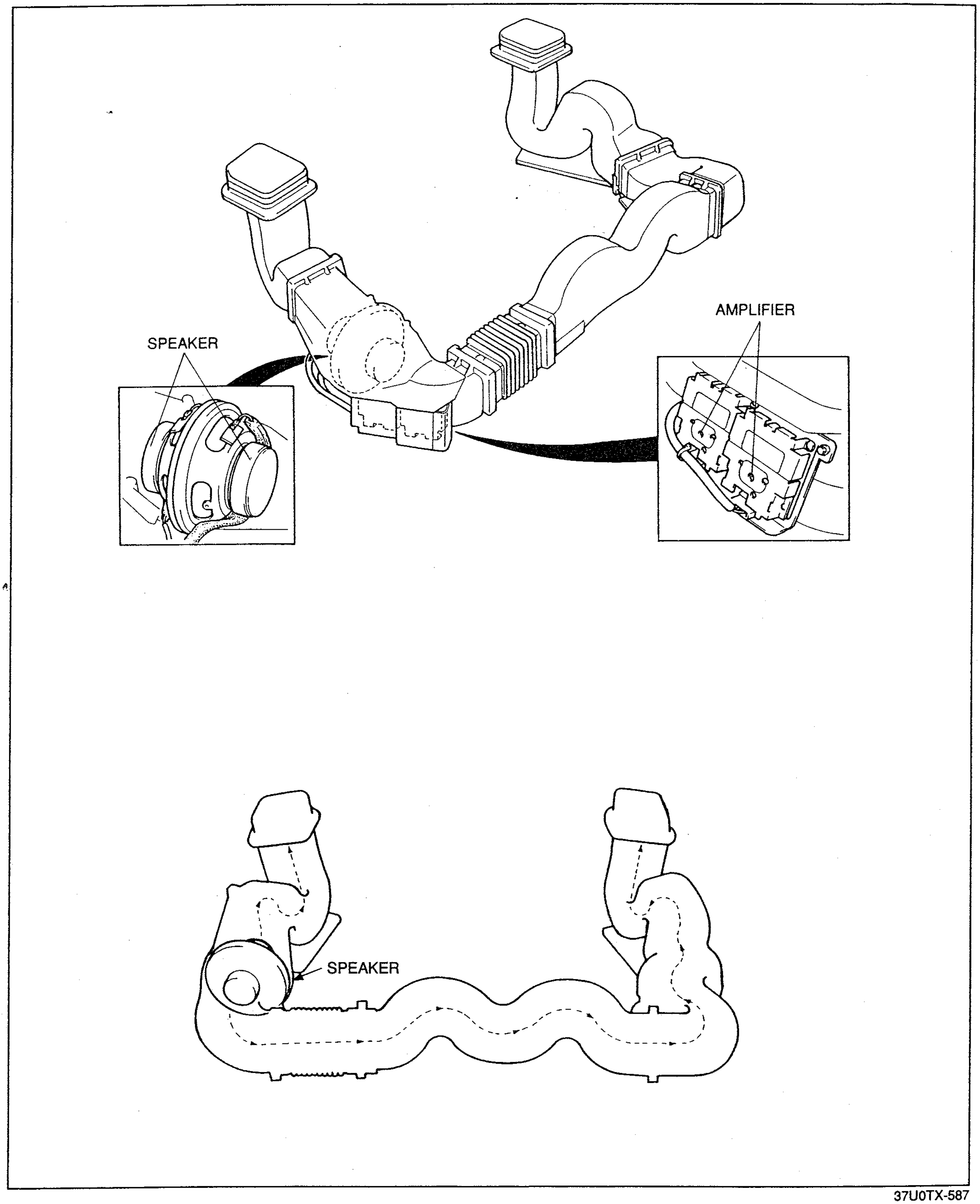

37U0TX-587

The main feature of the Acoustic Wave® Guide Assembly is its superior reproduction of bass with very low distortion. It provides large output with small input in much the same way that a flute can fill an entire concert hall. It covers a frequency range of approximately 40 Hz to 200 Hz. Through its unique design and the use of light-weight plastic, bass sound reproduction equivalent to a 30 kg (66 lb) sealed speaker cabinet is produced form a compact, 7 kg (17 lb) assembly.

THE WAVE GUIDE LENGTHS ARE IN THE PRECISE RATIO OF 1:3 WHICH PRODUCES A BROAD RANGE OF BASS FREQUENCIES EFFICIENTLY.

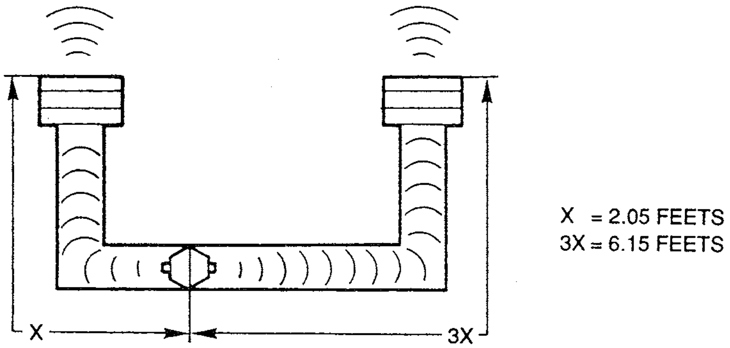

37U0TX-588

The Acoustic Wave® Guide Assembly includes two 6.5 inch {16.5 cm} speakers and two related amplifier modules. The two speakers are placed face-to-face in the left section of the ducting. The length of the Acoustic Wave® Guides are in a precise ratio of 1:3 which produces high efficiency, low distortion bass over a broad frequency range. This is determined so that each Acoustic Wave® Guides operates efficiently in a specific frequency range that is inversely proportional to its length, and produces large acoustic output.

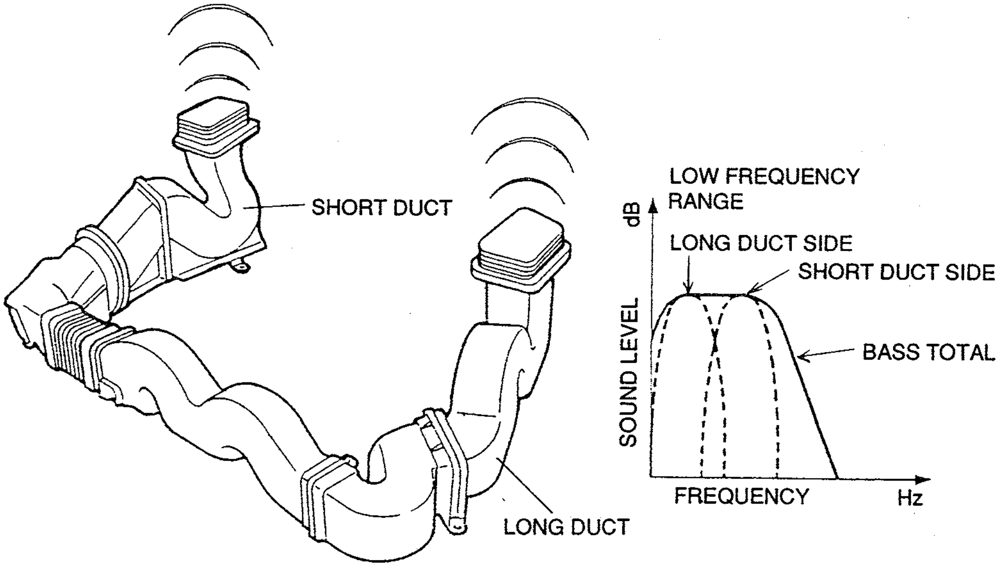

37U0TX-589

In the lowest frequency, the longer duct has higher resonance efficiency. When the frequency increases, the shorter duct becomes more efficient, and then the longer duct functions efficiently again. When combined, the ducts provides uninterrupted powerful low frequency output. And when integrated into the acoustic design of the rest of the audio system, the Acoustic Wave® Music System produces an extraordinarily lifelike sound.

OPERATION DESCRIPTION
AM·FM Tuner/Cassette Tape Deck

Name	Switch	Procedure
Radio ON / OFF and volume control knob	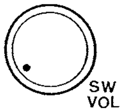	1. Press knob to turn radio ON / OFF 2. Turn knob clockwise to increase volume Turn knob counterclockwise to decrease volume
Bass / balance control knob	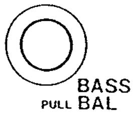	1. Press and release to set knob to first position Turn knob clockwise for more lows Turn knob counterclockwise for less lows 2. Pull to set knob to second position Turn knob clockwise to shift sound to left Turn knob counterclockwise to shift sound to right
Treble control knob	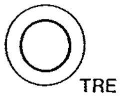	Press and release to set knob to first position Turn knob clockwise for more highs Turn knob counterclockwise for less highs
Band selector push button		1. Press button to change bands AM, FM1, and FM2 modes are alternatively selected as shown  When stereophonic broadcasting is received in FM1 or FM2 mode, ST is shown on display 2. During tape mode, press and hold this button and △ of the manual tuning push button simultaneously for more than 3 seconds and tape counter is reset to zero
Channel preset tuning push button	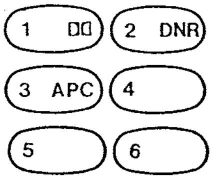	Six buttons are equipped to set frequencies of up to six stations each for AM, FM1, and FM2 1. Setting frequency Select frequency and press and hold preset button more than 1.5 seconds 2. Tuning to preset frequency Press desired preset button for less than 1.5 seconds
Auto memory tuning push button		1. Setting frequency Press and hold button more than 1.5 seconds Searching starts from lowest frequency within selected band and six strongest stations are selected and memorized 2. Tuning to preset frequency Press button for less than 1.5 seconds and memorized frequencies are tuned one by one with each press 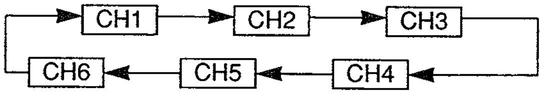 When preset frequencies are less than six, number of receivable frequencies is shown on display. When there are no receivable frequencies, A flashes twice on display. 3. During tape mode, press and hold this button more than 1.5 seconds to display total time of playback, fast forward, and rewind of a tape (unit: hours {H}), and to decide head replacement time

Name	Switch	Procedure
Scan tuning push button		Press button and searching of station starts from lowest frequency of selected band When receivable frequency is tuned, frequency flashes on display for 5 seconds; then searching starts again Press button again while frequency is flashing to memorize station
Manual tuning push button	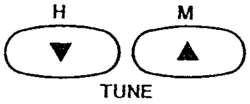	Press ▽ or △ less than 0.5 second to manually tune stations When pressed more than 0.5 second, first receivable frequency is tuned Press △ for higher frequency Press ▽ for lower frequency
Fast forward / rewind push button	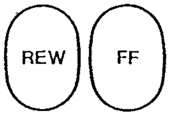	Press REW button to rewind tape Press FF button to fast forward tape
Play / reverse push button		Press button during tape playback to play reverse side of tape Press button during fast forward/rewind mode to play tape Press button during modes other than tape playback or tape player OFF to select tape mode and play tape
Stop / eject push button		Press button during fast forward/rewind mode to cancel mode; select tape playback mode, if desired Press button during tape playback to stop play Press again to eject tape
Tape slot	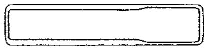	Insert a tape into tape slot and system automatically switches to tape operation Determines tape type by identification hole in cassette pack when it is inserted In case of metal or chromium tape, METAL shown on display
Clock display push button		Press button less than 1.5 seconds and clock, frequency, and tape play time are alternately shown on display with each press Press button more than 1.5 seconds to select clock adjustment mode; clock flashes on display Press manual tuning ▽ push button to adjust hours Press manual tuning △ push button to adjust minutes Press button again to start clock

37U0TX-591

Name	Switch	Procedure
APC (automatic program control) push button		Press button during tape playback and APC appears on display In this condition, press FF button to skip to beginning of next program Press REW button during tape playback to rewind tape to beginning of current tune APC detects silence of more than 15 seconds and automatically skips forward to next recorded section
Dolby noise reduction push button ✻1	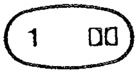	Press button when playing tape encoded with Dolby NR Dolby alternately turns ON / OFF with each press
DNR (dynamic noise reduction) push button ✻2	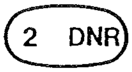	During tape mode, DNR alternately turns ON/OFF with each press of this button. While system is ON, DNR appears on display.
Anti-theft indicator	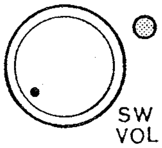	The anti theft illumination lamp flashes when anti theft function is working (Ignition switch OFF)

37U0TX-592

✻1 The Dolby noise reduction system is manufactured under license of the Dolby Laboratory Licensing Corporation. DOLBY and ᗡD are registered trade marks of Dolby Laboratory Licensing Corporation.

✻2 The dynamic noise reduction system is manufactured under license of National Semiconductor Co., Ltd. DNR is the registered trade mark of National Semiconductor Co., Ltd.
The dynamic noise reduction system changes the high-range frequency characteristics to reduce noise peculiar to high-pitched tone.
The effect is heard especially for low tones.
During tape playback, joint use with the Dolby noise reduction system is recommended for greater effect.

Name	Switch	Procedure
Disc slot	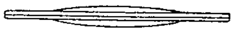	Lightly push disc, label-side up, into slot; auto loading mechanism will take over to set disc and begin play 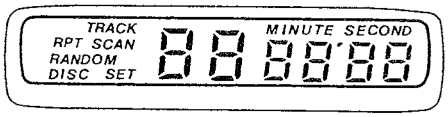 When disc is loaded, system reads data on disc and displays tune number and total play time for 5 seconds
Eject / reload push button	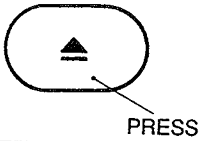	1. Press button to eject disc at any time 2. Single eject operation is possible after ignition switch is turned OFF 3. Repeat, random play, and scan functions are canceled 4. Press again and disc is reloaded and playback starts
Play / stop push button	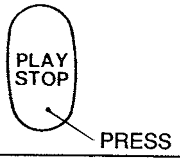	1. Press button while disc is being played and play will pause Press again and play will resume 2. Press button during tape or radio mode to play loaded disc from where playback is stopped
Track search push button	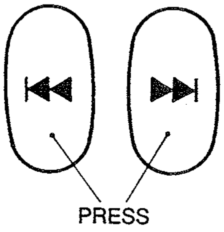	Press button to search for beginning of next or current program 1. Press ▶▶| (up) button for less than 0.5 second during disc play or searching and beginning of next tune is selected and played 2. Press |◀◀ (down) button for less than 0.5 second during disc play and current tune is replayed from beginning 3. Press |◀◀ (down) button for less than 0.5 second during searching and beginning of present tune is selected and played Tunes are changed one by one with each press of button When last (first) tune is reached, first (last) tune is then selected Repeat and random play functions are canceled
Fast forward / reverse push button		Press button to fast forward/reverse disc 1. Press and hold ▶▶| (up) button for more than 0.5 second during disc play and disc play position moves ahead at high speed while button pressed 2. Press and hold |◀◀ (down) button for opposite operation of FF button 3. When last part of last tune is reached during fast forward operation, disc stops at first tune 4. When first part of first tune is reached during reverse operation, disc stops When either button is pressed during repeat operation, repeat function is canceled after disc play position passes tune to be repeated
Repeat push button	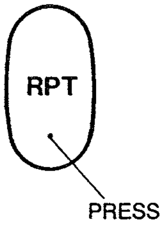	1. Press button during tune play or scanning to repeatedly play tune REPEAT shown on display 2. Press again to cancel repeat operation and resume normal operation 3. Repeat function will not be canceled when radio, tape, or pause mode is selected 4. Repeat function is canceled when: • Eject button is pressed • RANDOM button is pressed • REPEAT button is pressed • SCAN button is pressed • STOP button is pressed • Track search is made

37U0TX-593

Name	Switch	Procedure
Scan push button	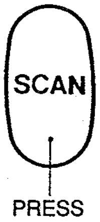	1. Press button during disc play and scanning starts from next tune SCAN shown on display 2. Press button during searching and scanning starts from present tune SCAN shown on display 3. Press button and first 10 seconds of each tune is played 4. Press button again during scanning and present tune is played 5. Scanning function is canceled when: • All programs on disc have been scanned • REPEAT button is pressed • RANDOM button is pressed • SCAN button is pressed • Track search is made • STOP button is pressed • Eject button is pressed • Operation mode is changed to radio, tape, or pause • Ignition switch is turned OFF
Random play push button		Press button to play tunes on disc in a random order 1. Press button during disc play or searching and disc play position moves at high speed RANDOM shown on display 2. When random searching is completed, playback starts Program No. and play time (0'00) are shown on display After first tune is played, next random tune is played 3. Random play function is canceled when: • REPEAT button is pressed • RANDOM button is pressed • SCAN button is pressed • Track search is made • STOP button is pressed • Eject button is pressed • Operation mode is changed to radio, tape, or pause • Ignition switch is turned OFF

37U0TX-594

CONNECTOR TERMINAL SPECIFICATIONS
AM·FM Tuner / Cassette Tape Deck (Type 1)

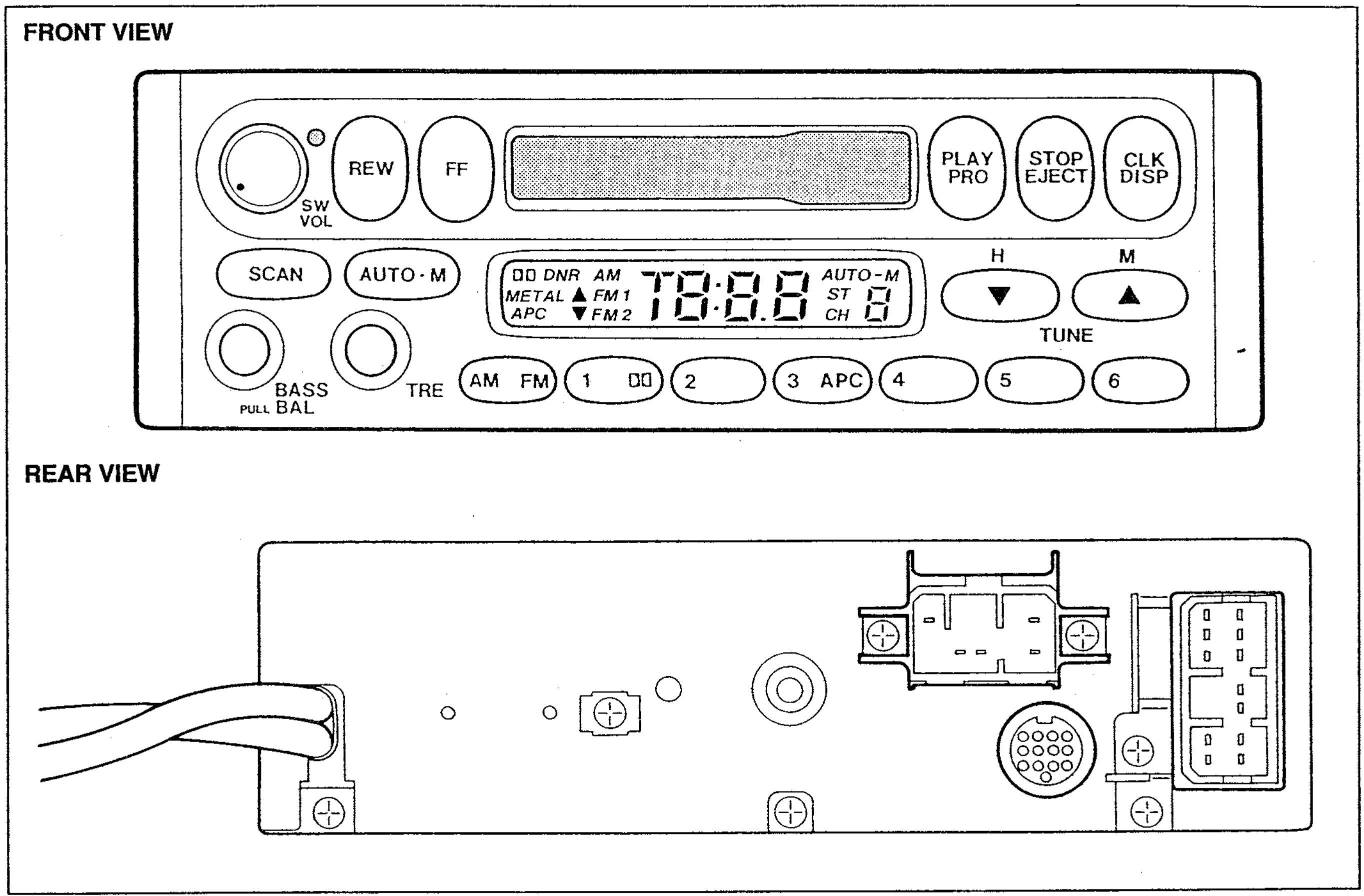

37U0TX-595

V$_B$: Battery voltage

8-pin connector

2A	Rear speaker (LH) ⊕
2B	Rear speaker (LH) ⊖
2C	
2D	
2F	Rear speaker (RH) ⊕
2H	Rear speaker (RH) ⊖
2I	System mute (Output)
2J	

V$_B$: Battery voltage

12-pin connector

1A	ACC
1B	
1C	Backup power (V$_B$)
1D	Ant. SW (13.2V)
1E	TNS
1F	Illumi. ⊖
1H	
1J	Amp. control (13.2V)
1K	Front speaker (LH) ⊕
1L	Front speaker (LH) ⊖
1M	Front speaker (RH) ⊕
1N	Front speaker (RH) ⊖

DIN connector
13-pin

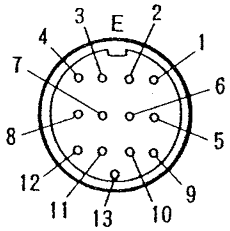

1	Output LH ⊕
2	Input LH ⊕
3	Output RH ⊕
4	Input RH ⊕
5	Signal ground
6	TNS
7	ACC
8	Backup power (V$_B$)
9	System control ON
10	Illumi. ⊖
11	System control OFF
12	System control (play)
13	Mute (input)
E	Shield earth

1-pin connector

A	Earth

AM·FM Tuner / Cassette Tape Deck (Type 2)

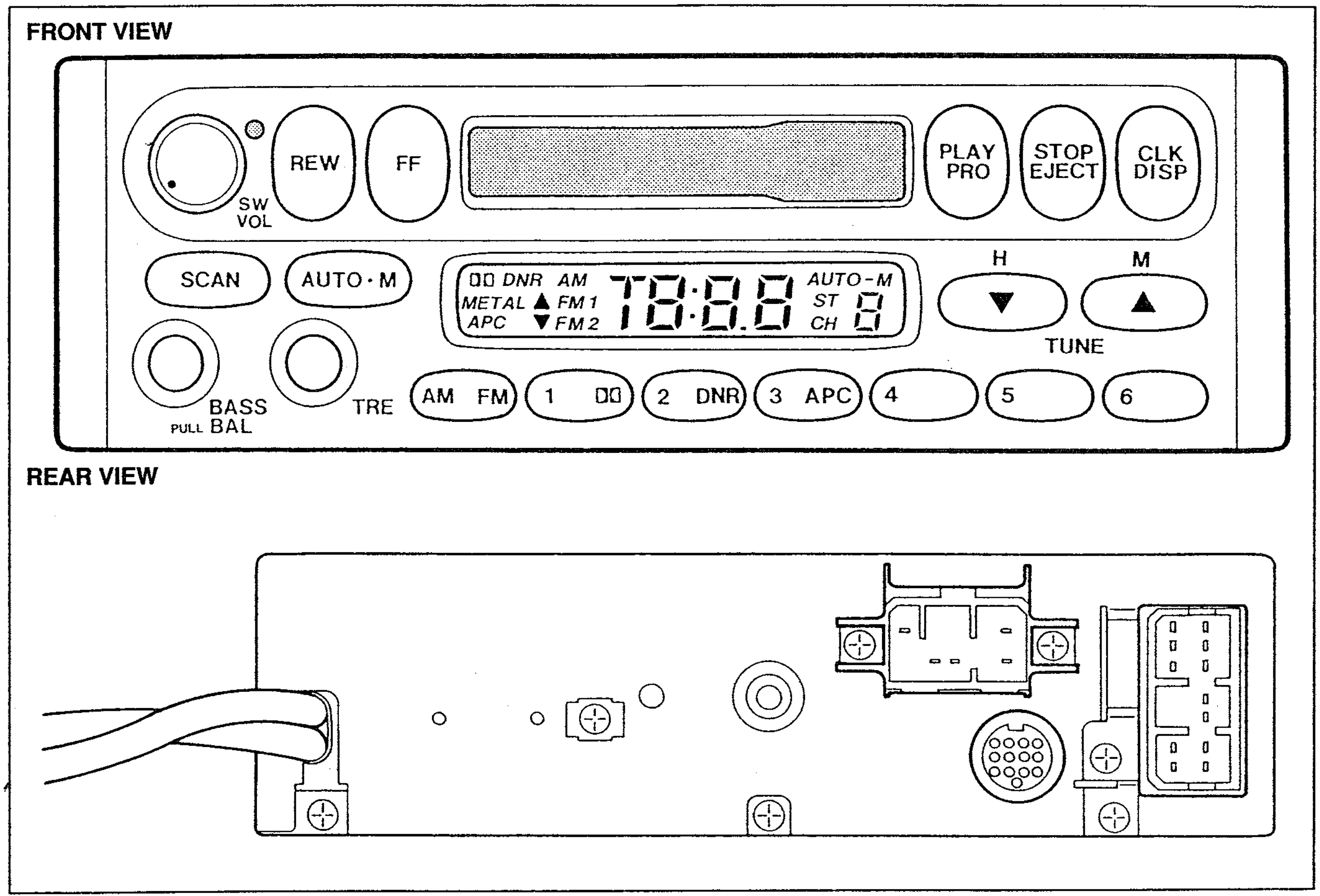

37U0TX-596

8-pin connector

2A	Output LH ⊕
2B	Output LH ⊖
2C	
2D	
2F	Output RH ⊕
2H	Output RH ⊖
2I	System mute (Output)
2J	

VB: Battery voltage

12-pin connector

1A	ACC
1B	
1C	Backup power (V_B)
1D	Ant. SW (13.2V)
1E	TNS
1F	Illumi. ⊖
1H	Ground
1J	Amp. control (13.2V)
1K	Output LH ⊕
1L	Output LH ⊖
1M	Output RH ⊕
1N	Output RH ⊖

DIN connector 13-pin

VB: Battery voltage

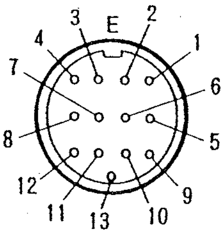

1	Output LH ⊕
2	Input LH ⊕
3	Output RH ⊕
4	Input RH ⊕
5	Signal ground
6	TNS
7	ACC
8	Backup power (V_B)
9	System control ON
10	Illumi. ⊖
11	System control OFF
12	System control (play)
13	Mute (input)
E	Shield earth

1-pin connector

A	Earth

Compact Disc (CD) Player

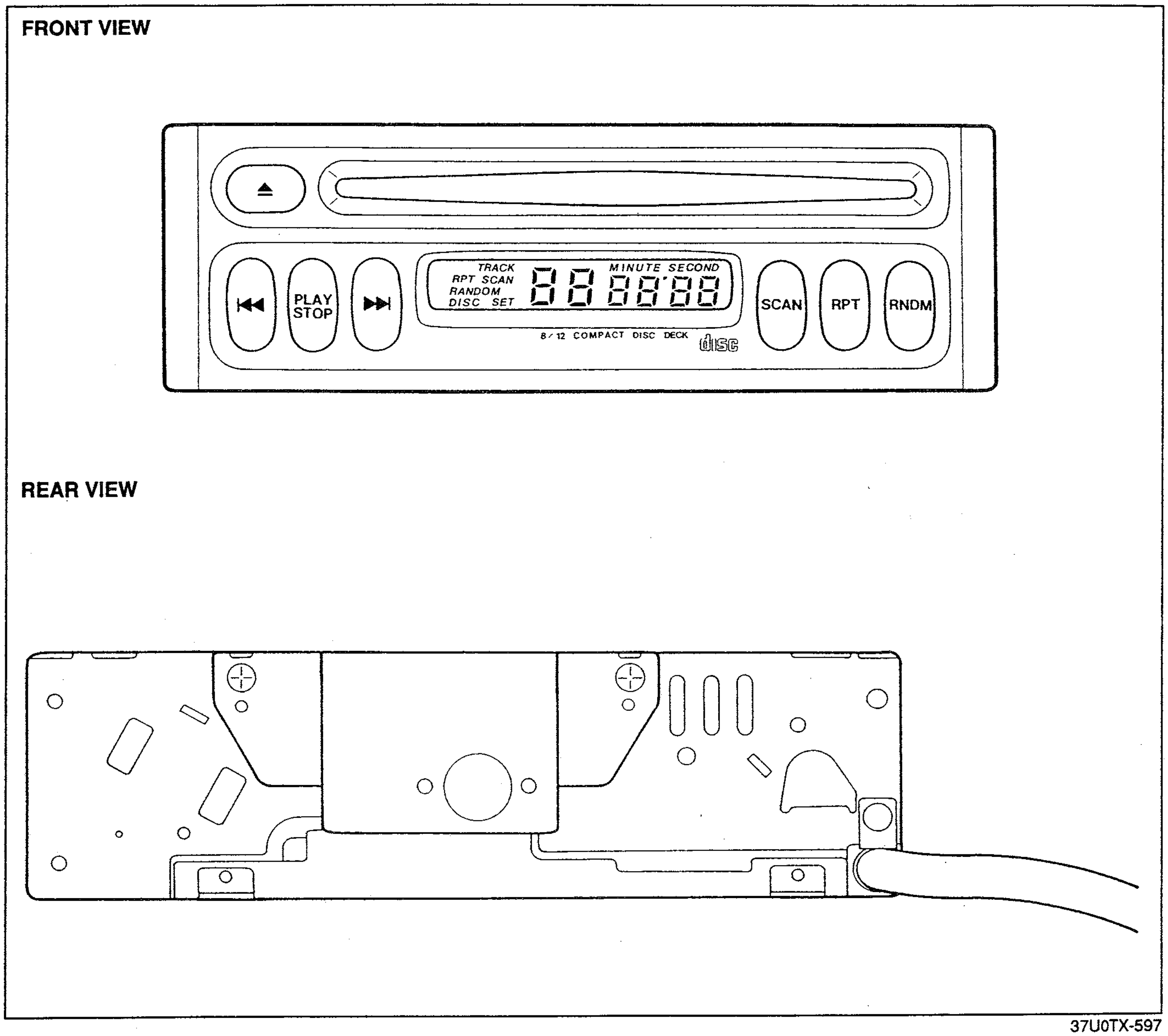
FRONT VIEW

REAR VIEW

37U0TX-597

DIN connector
13-pin

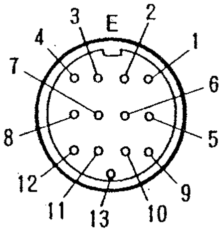

VB: Battery voltage

1	Input LH ⊕
2	Output LH ⊕
3	Input RH ⊕
4	Output RH ⊕
5	Signal ground
6	TNS
7	ACC
8	Backup power (VB)
9	System control OFF
10	Illumi. ⊖
11	System control ON (aux)
12	System control (play)
13	Mute (output)
E	Shield earth

Center Speaker Amplifier (Type 1)

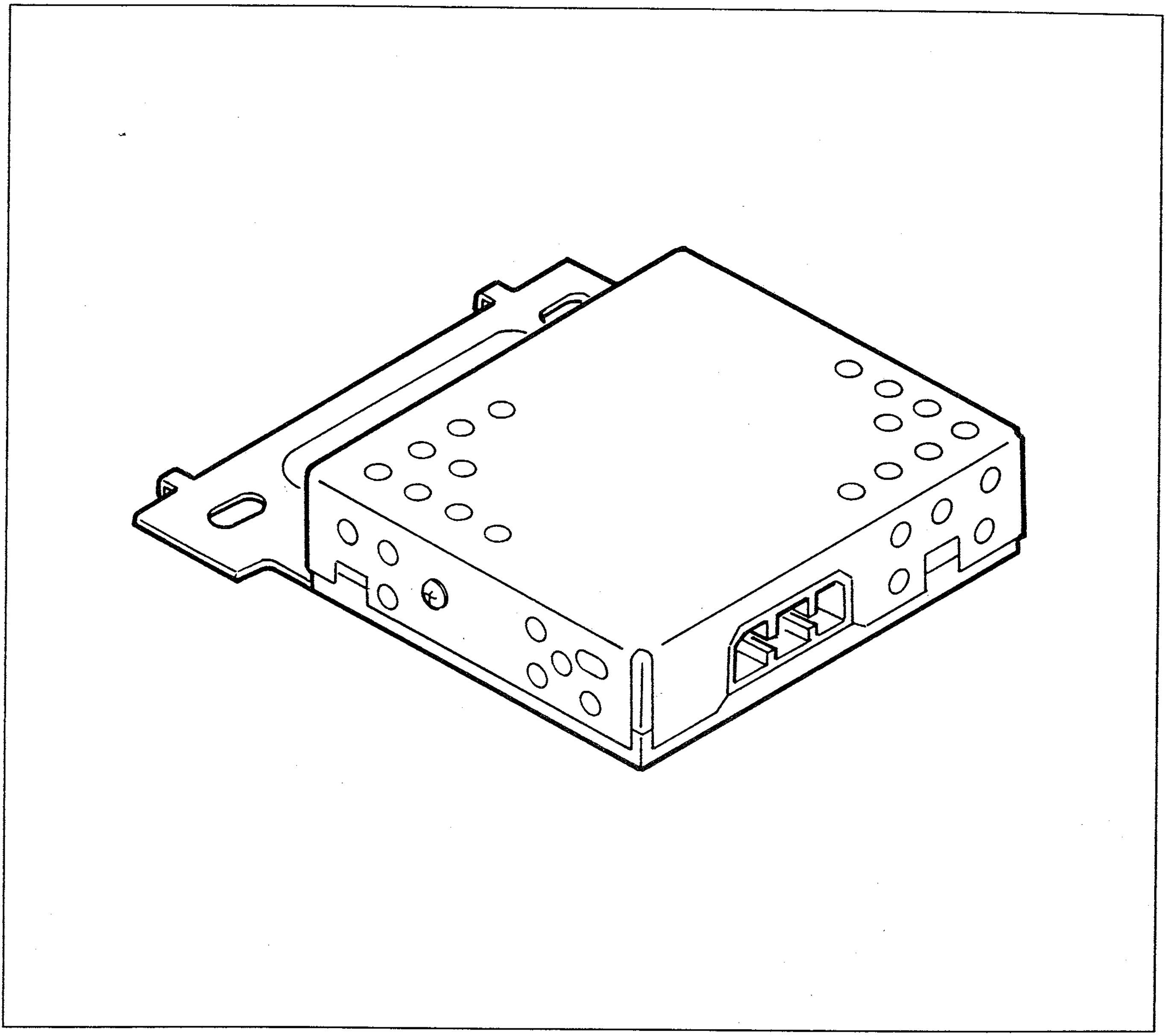

37U0TX-598

14-pin connector

O	M	K	☒		E	C	A
P	N	L	J	H	F	D	B

A	
B	Power ground
C	ACC
D	Amp. control (13.2V)
E	
F	Center speaker ⊕ (Output)
H	Center speaker ⊖ (Output)
J	System mute
K	
L	
M	Input LH ⊕
N	Input LH ⊖
O	Input RH ⊕
P	Input RH ⊖

Center Speaker Amplifier (Type 2)

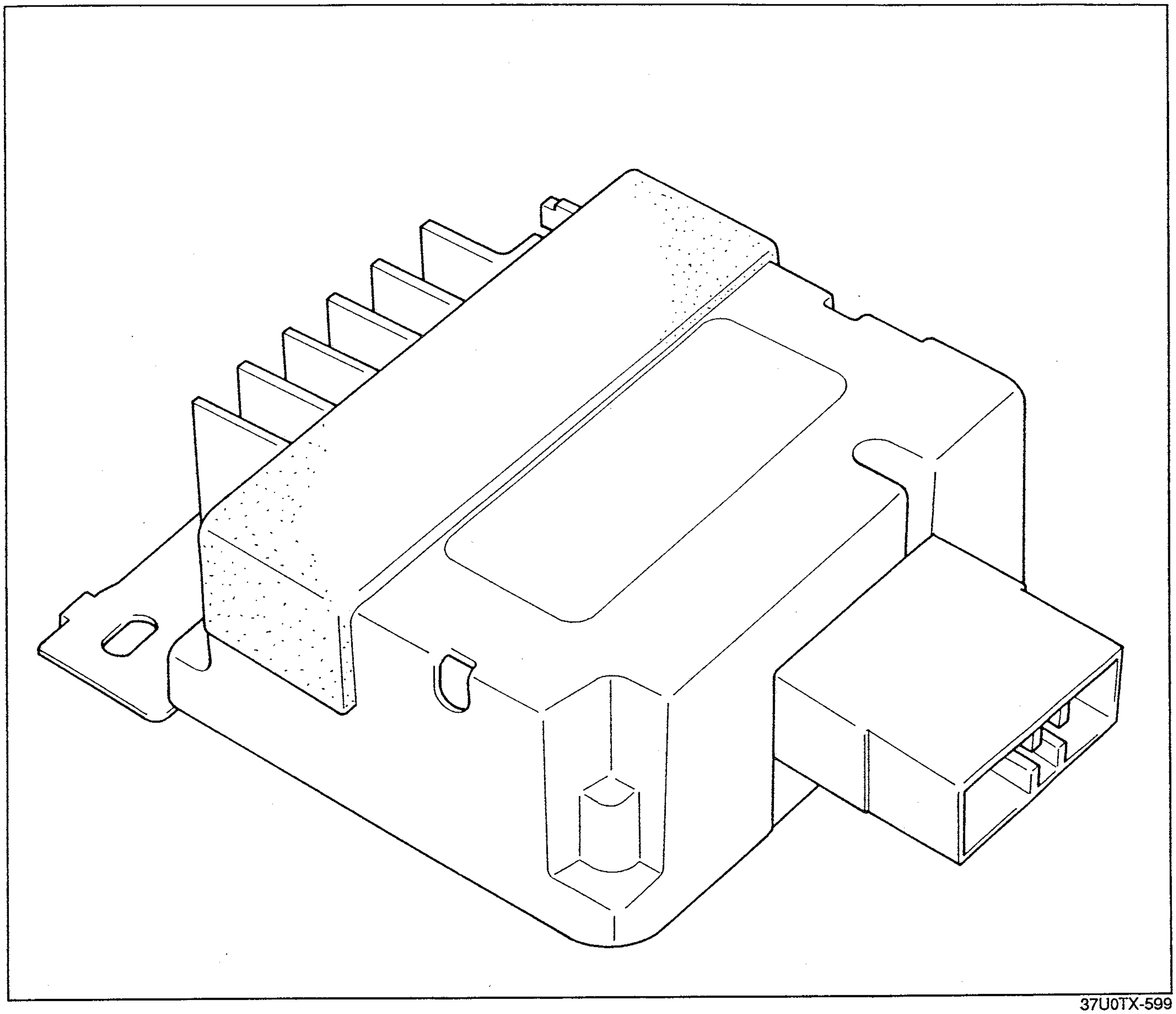

37U0TX-599

14-pin connector

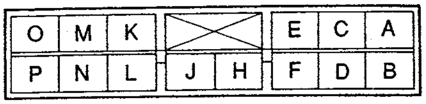

V_B: Battery voltage

A	
B	Power ground
C	
D	V_B
E	
F	Center speaker ⊕ (Output)
H	Center speaker ⊖ (Output)
J	
K	
L	
M	Input LH ⊕
N	Input LH ⊖
O	Input RH ⊕
P	Input RH ⊖

TERMINAL DESCRIPTIONS

VB: Battery voltage

Terminal	Description
ACC	Input power for audio unit
Backup power (VB)	Input power for backup power for preset frequencies and clock
TNS	Input power terminal for panel illumination
Illumi. ⊖	
Center speaker ⊕	For center speaker
Center speaker ⊖	
Amp. control (13.2V)	Control output power terminal to control amplifier operation input power terminal
Shield earth	To protect DIN cord and to shut out electrical noise
Front speaker RH ⊕	For RH front speaker
Front speaker RH ⊖	
Front speaker LH ⊕	For LH front speaker
Front speaker LH ⊖	
Rear speaker RH ⊕	For rear speaker
Rear speaker LH ⊕	
System mute	For noise cut signal to amplifiers when operation mode is changed
Beep	For production of beep sound during audio system operation

37U0TX-600

ANTI-THEFT SYSTEM

Note

- **When activated, the anti-theft system is triggered if the electrical power source is disconnected from the audio unit. If the system is triggered, the audio unit will be inoperative when reconnected to a power supply, and "code" will flash on the display until the preselected code number is input. If the anti-theft system is activated, reset the unit as described under "Canceling Anti-theft Operation".**
- **The anti-theft system is triggered under the following conditions if the system protection has been activated.**
  1. **A battery cable is disconnected.**
  2. **Battery is discharged.**
  3. **Audio unit connectors are disconnected.**

Operation	Reference page
Input code number to activate anti-theft system	T–61 Setting code number
Delete previous code number and set new number	T–63 Canceling code number
Resume audio unit operation after anti-theft system is triggered	T–65 Canceling anti-theft operation

37U0TX-601

Setting Code Number

Note

- **Input the code number within 10 seconds, or the display will be deleted. If deleted, repeat the procedure from Step 1.**

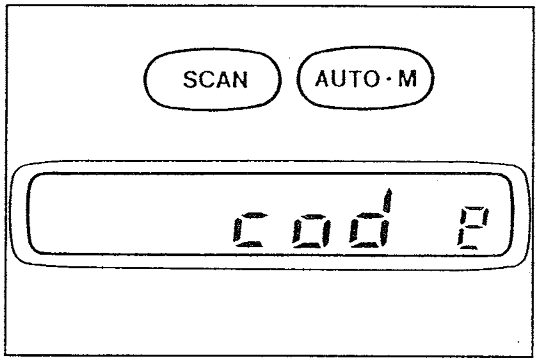

37U0TX-602

Step 1

With the ignition switch in the ACC position, turn OFF the audio unit.

Step 2

Press and hold the SCAN and AUTO-M buttons simultaneously unit "code" appears on the display (approx. 1.5 seconds).

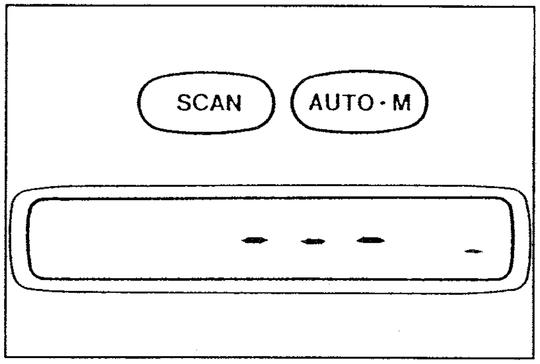

37U0TX-603

Step 3

Press the SCAN and AUTO-M buttons again until bars appear on the display.

Note

- **Input the code number within 10 seconds, or the display will be deleted. If deleted, repeat the procedure from Step 1.**
- **Complete steps 1-3 within 10 seconds, or the setting procedure will be canceled.**

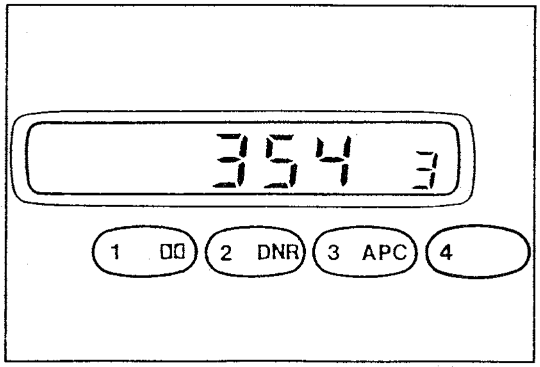

37U0TX-604

Step 4

Caution

- **Record the code number before attempting to input it. If the number is input and then forgotten, it cannot be canceled and the audio unit will be rendered inoperative if ever disconnected.**

Note

- **Input the code number within 10 seconds, or the display will be deleted. If deleted, repeat the procedure from Step 1.**

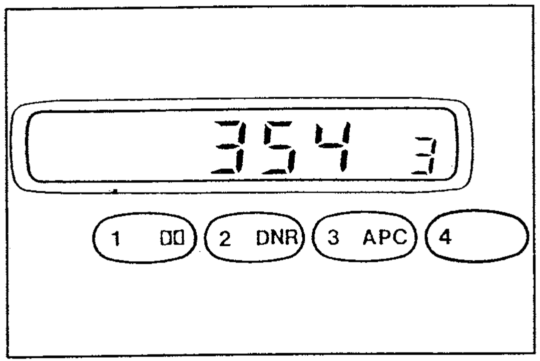

37U0TX-605

While the bars are displayed, input the personally selected code number by pressing preset channel buttons 1, 2, 3, and 4. Use 1 for the first digit, 2 for the second, 3 for the third, and 4 for the last digit.
Example: Inputting code number 3543
Press 1 four times, 2 six times, 3 five times, and 4 four times.

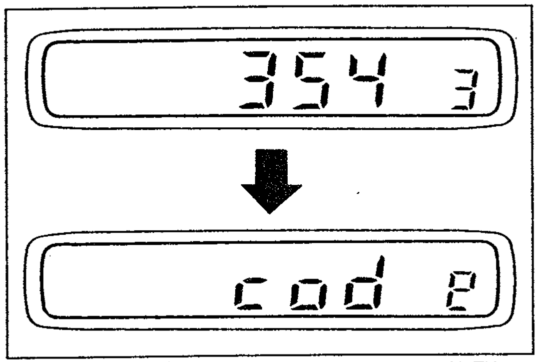

37U0TX-606

Step 5

With the code number displayed, press and hold the SCAN and AUTO-M buttons until a beep is heard (approx. 1.5 seconds).
"Code" will be displayed for approximately 5 seconds, and after it disappears, the number is set.

Note

- **If "Err" (error) appears on the display, repeat the procedure from Step 1.**
- **If input error is repeated three times, temporarily turn OFF the ignition switch and restart the procedure.**

Canceling Code Number

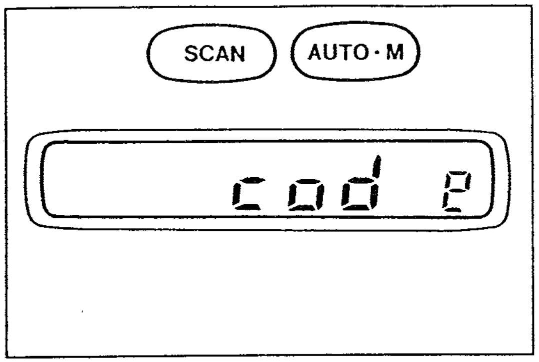

37U0TX-607

Step 1

With the ignition switch in the ACC position, turn OFF the audio unit.

Step 2

Press and hold the SCAN and AUTO-M buttons simultaneously until "code" flashes on the display.

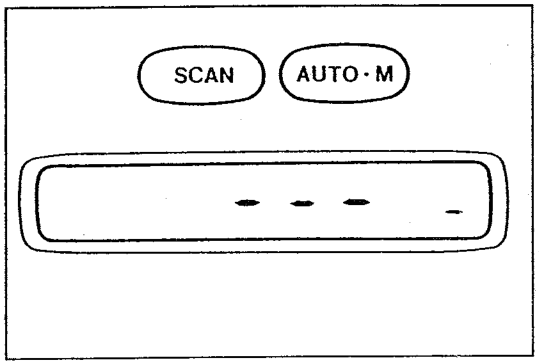

37U0TX-608

Step 3

Note

- **Complete Steps 1-3 within 10 seconds, or the canceling procedure will canceled.**

Press SCAN and AUTO-M buttons again until bars appear on the display.

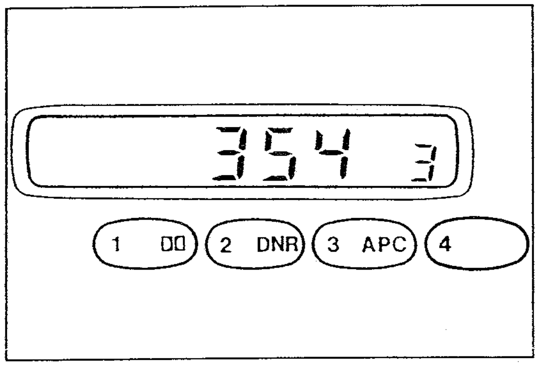

37U0TX-609

Step 4

While the bars are displayed, input the current code number as described in Setting Code Number, STep 4.

Step 5

With the code number on the display, press and hold the SCAN and AUTO-M until a beep is heard (approx. 1.5 seconds).

"Code" will be displayed for approximately 5 seconds and the code number is canceled. The display then resumes the code number setting condition.

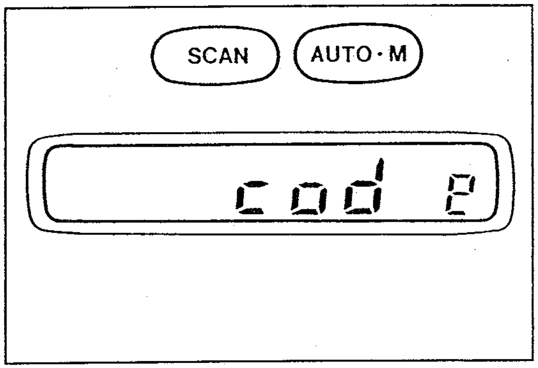

37U0TX-610

Note

- **Input the code number within 10 seconds, or the display will be deleted. If deleted, repeat the procedure from Step 1.**
- **If "Err" (error) appears on the display, repeat the procedure from Step 1.**
- **If "code" appears on the display, the code number is not canceled. Repeat the procedure from Step 3.**
- **Three consecutive errors will activate the anti-theft operation, and the audio unit will be rendered completely inoperative. In this case, consult Clarion Service Co.**
- **Error includes turning the ignition switch OFF and Disconnection of the audio unit connectors.**

Resetting Code Number

When the code number cancel operation is completed, set a new code number as follows.

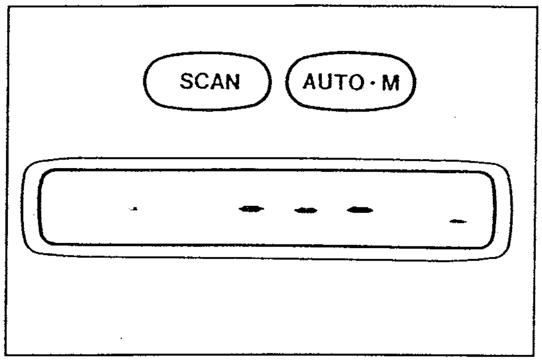

37U0TX-611

Step 1

Press and hold the SCAN and AUTO-M buttons until bars appear on the display.

Step 2

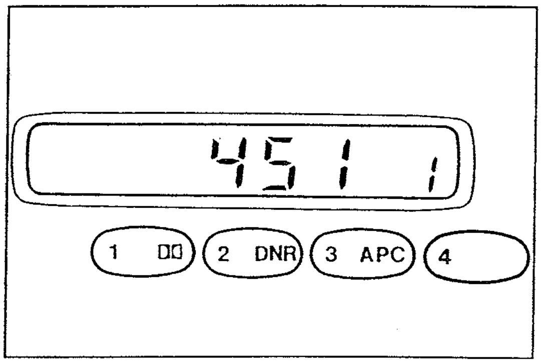

37U0TX-612

Caution

- **Record the code number before attempting to input it. If the number is input and then forgotten, it cannot be canceled and the audio unit will be rendered inoperative if ever disconnected.**

Note

- **Complete Steps 1-3 within 10 seconds, or the setting procedure will be canceled.**

While the bars are displayed, input the new code number as described under "Setting Code Number".

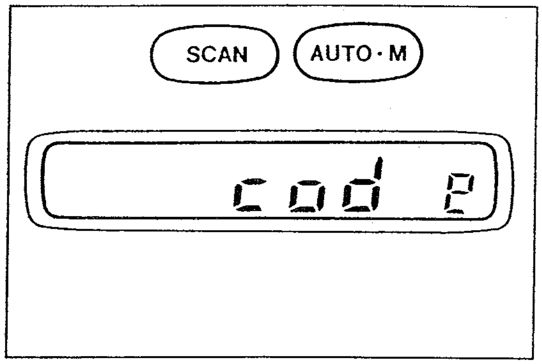

37U0TX-613

Step 3

Press and hold the SCAN and AUTO-M buttons simultaneously until a beep is heard and "code" appears on the display (approx. 1.5 seconds).
"Code" will flash for 5 seconds then disappears to indicate that the code number is set.

Step 4

If "Err" (error) appears on the display, repeat procedure from step 1.

Note

- **Error includes turning the ignition switch OFF and disconnection of the audio unit connectors.**
- **Three consecutive errors will activate the anti-theft operation, and the audio unit will be completely inoperative. In this case, consult Clarion Service Co.**

Canceling Anti-theft Operation

- **The audio system becomes inoperative under the following conditions if the code number has been input.**
  1. **A battery cable is disconnected.**
  2. **Battery is discharged.**
  3. **Audio unit connectors are disconnected.**
- **To resume audio system operation, the anti-theft operation must be deactivated.**

2PU0TX-541

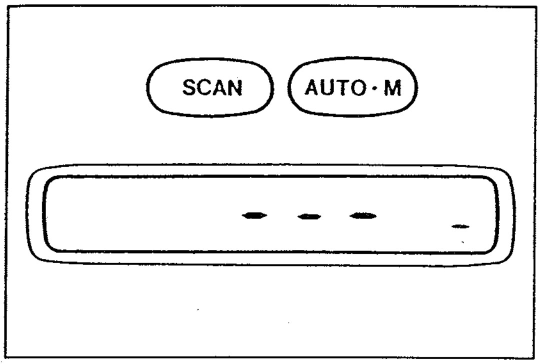

37U0TX-614

Step 1
Turn the ignition switch to the ACC position.
"Code" will flash on the display.

Step 2
Press the SCAN and AUTO-M buttons simultaneously until bars appear on the display.

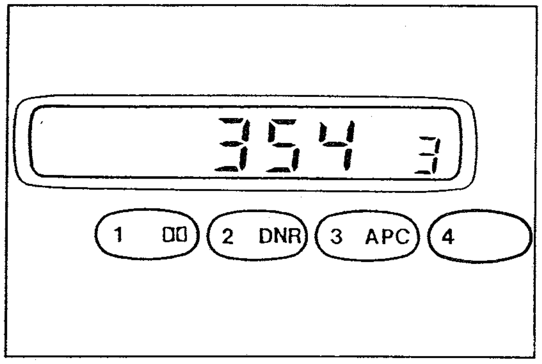

37U0TX-615

Step 3
While the bars are displayed, input the correct preselected code number as described in Setting Code Number, Step 4.

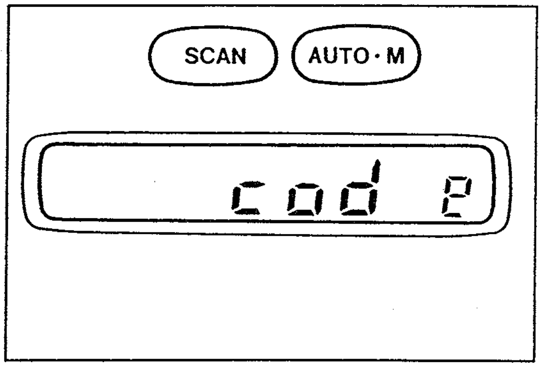

37U0TX-616

Step 4
Press and hold the SCAN and AUTO-M buttons until a beep is heard and "code" appears on the display (approx. 1.5 seconds).
"Code" will flash for 5 seconds, then disappear to indicate that the system is operable.

Step 5
If "Err" (error) appears on the display, repeat the procedure from Step 1.

Note

- **Error includes turning the ignition switch OFF and disconnection of the audio unit connectors.**
- **Three consecutive errors will activate the anti-theft operation and the audio unit will be completely inoperative. In this case, consult Clarion Service Co.**

THEFT-DETERRENT SYSTEM

OUTLINE

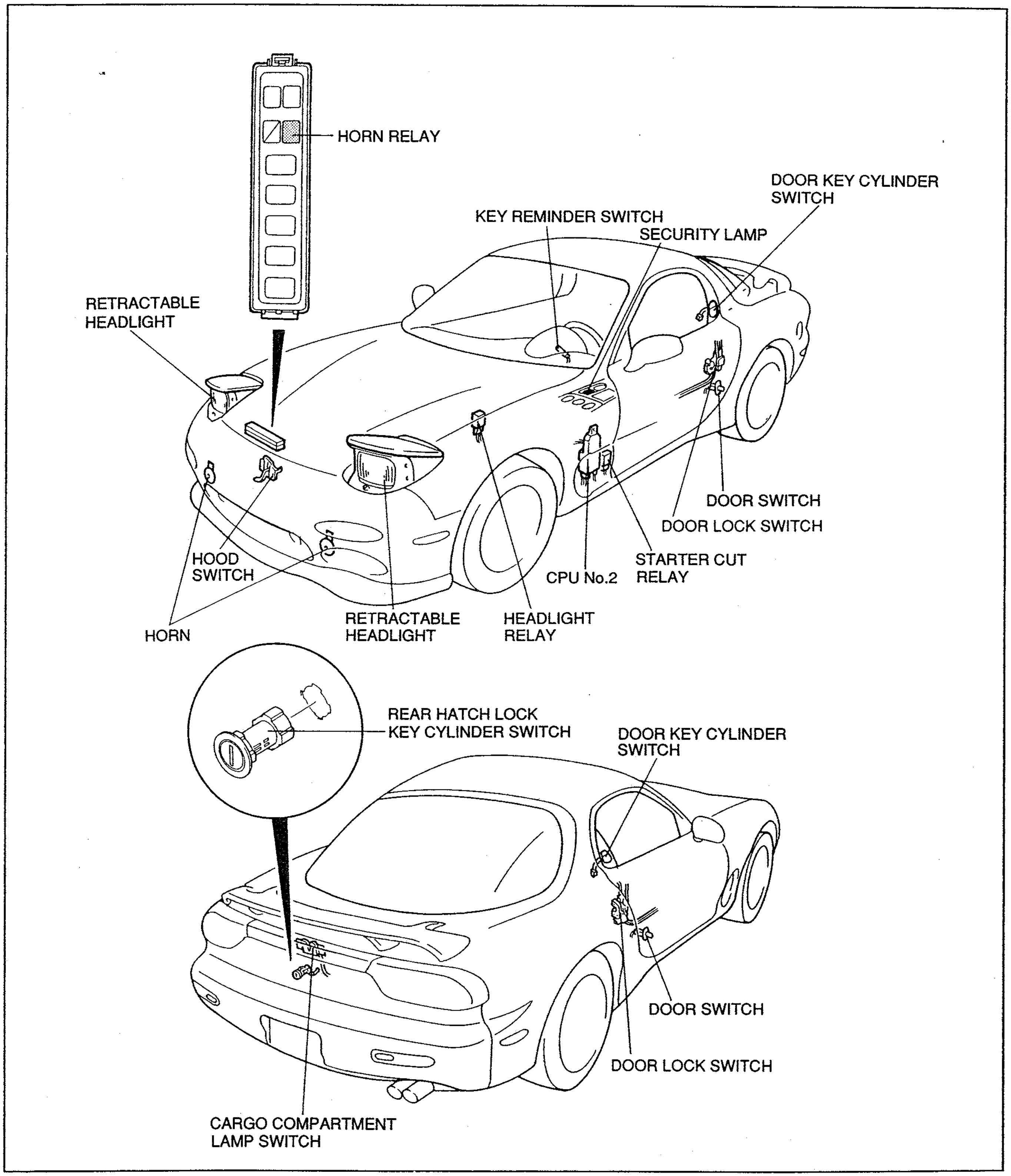

37U0TX-617

The theft-deterrent system includes sound and light alarms that activate when the hood, rear hatch, or door is opened by means other than the ignition key.
The headlights and hazard warning lights flash and the horn sounds if the alarm system is activated.
When the ignition key is inserted into the rear hatch lock key cylinder or either door key cylinder and is turned to UNLOCK, the alarm stops.

BASIC OPERATION

INITIAL PHASE

REMOVE THE KEY.

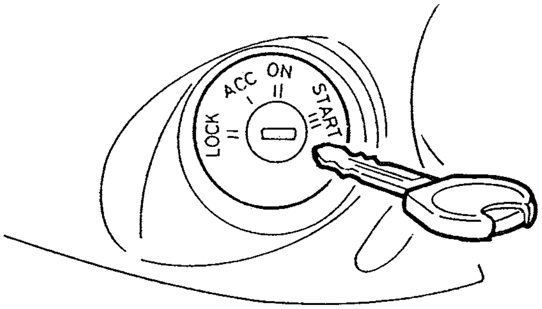

PREARMING PHASE 1

OPEN EITHER DOOR WHILE THE HOOD AND REAR HATCH ARE CLOSED; THE SECURITY LAMP WILL ILLUMINATE.

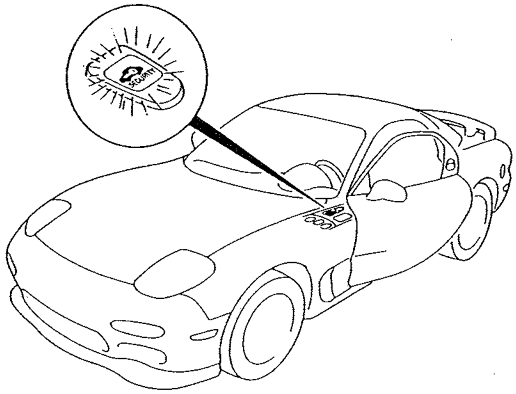

PREARMING PHASE 2

LOCK AND CLOSE ALL DOORS. AFTER THE SECURITY LAMP STAYS LIT FOR 10 SECONDS, THE SYSTEM PROCEEDS TO ARMING PHASE 1.

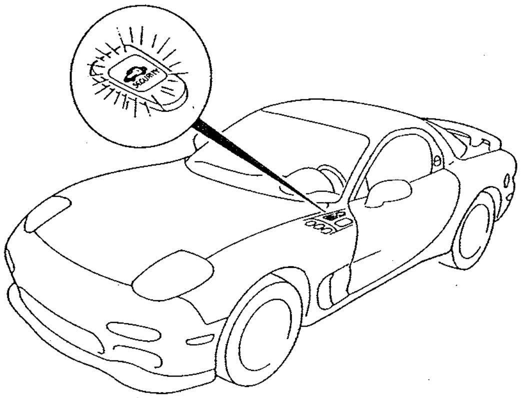

ARMING PHASE 1

THE SECURITY LAMP FLASHES EVERY 3 SECONDS, AND THE SYSTEM IS ARMED.

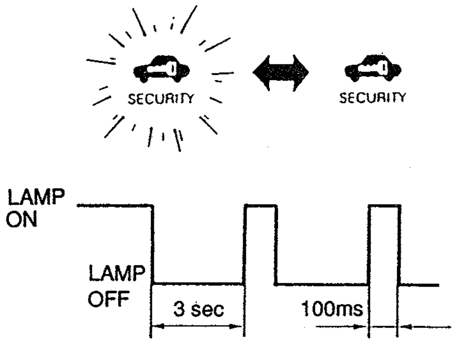

37U0TX-618

ARMING PHASE 2

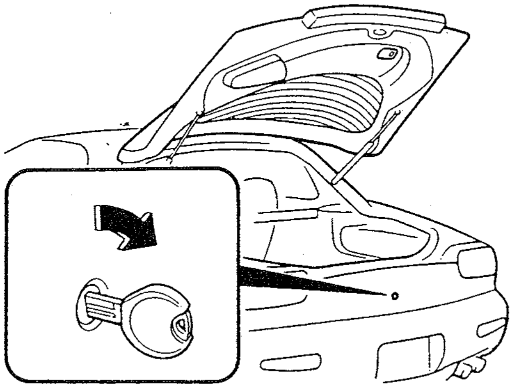

THE REAR HATCH MAY BE OPENED BY USING THE KEY DURING ARMING PHASE 1. THE SECURITY LAMP SHOULD KEEP FLASHING. THE PROCESS RETURNS TO ARMING PHASE 1 AFTER THE REAR HATCH IS CLOSED.

ALARM PHASE 1

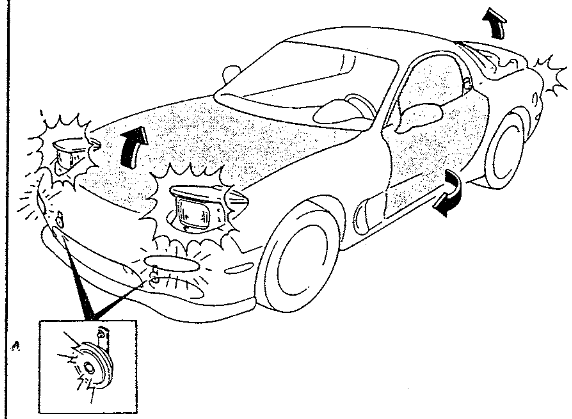

IF EITHER DOOR, THE HOOD, OR THE REAR HATCH IS OPENED WITHOUT A KEY OR THE IGNITION SWITCH IS FORCED ON, THE ALARM IS ACTIVATED.
THE HORN SOUNDS INTERMITTENTLY AND THE RETRACTABLE HEADLIGHTS AND HAZARD WARNING LIGHTS FLASH FOR 5 MINUTES.
THE STARTER DOES NOT WORK.

ALARM PHASE 2

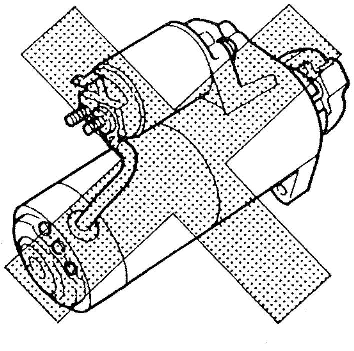

THE ALARM WARNINGS STOP.
THE STARTER DOES NOT WORK.

ALARM STOP PHASE

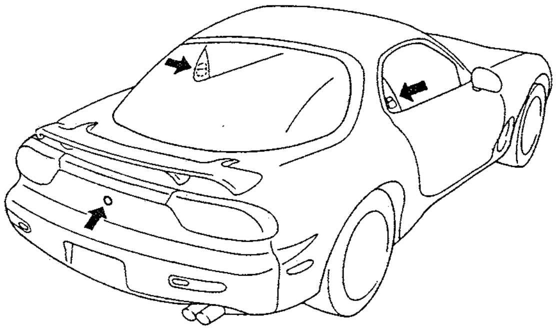

UNLOCK EITHER DOOR OR THE REAR HATCH WITH THE KEY.

37U0TX-619

SYSTEM DIAGRAM

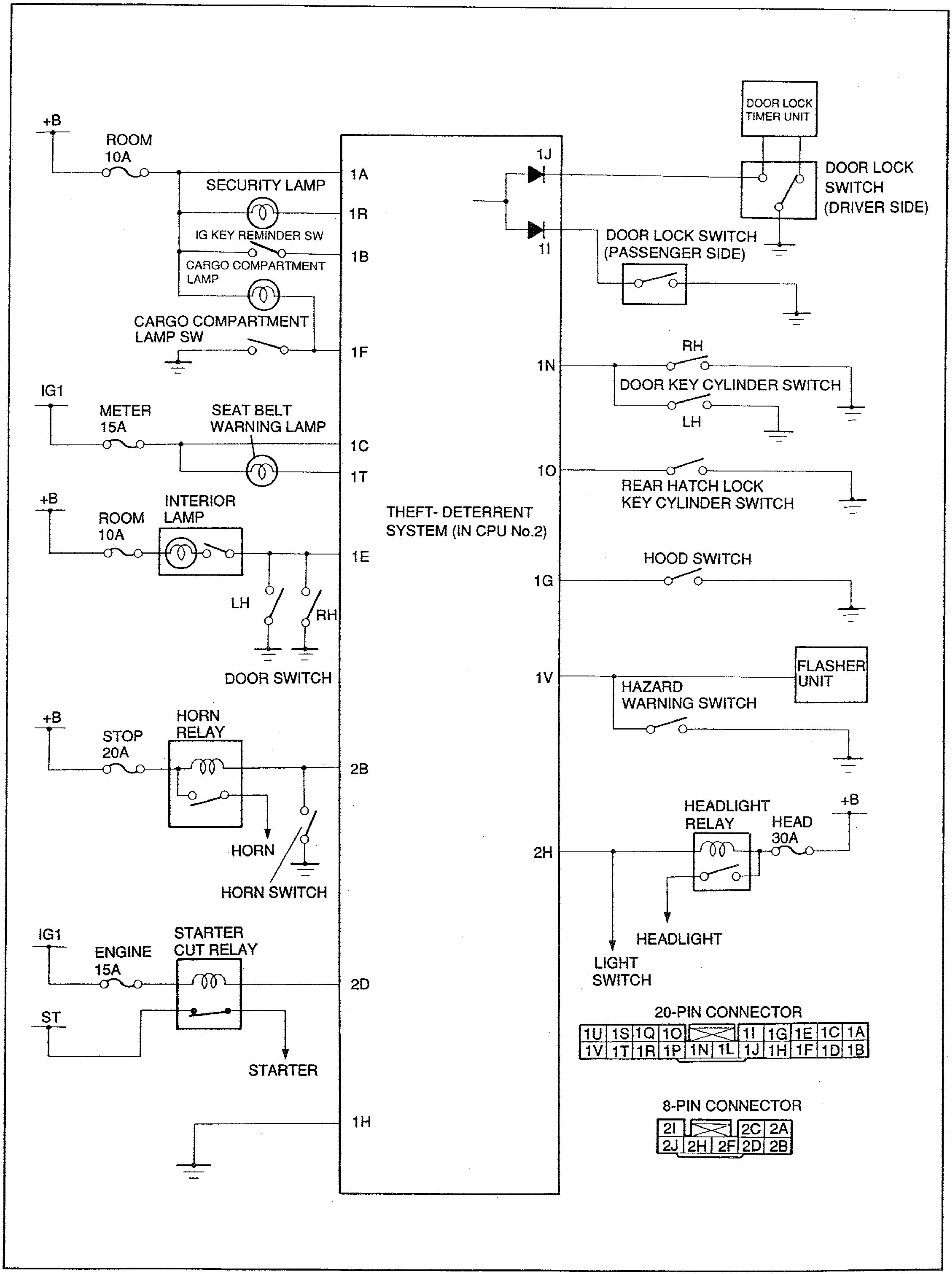

37U0TX-620

INPUT / OUTPUT

Phase	INPUT									OUTPUT	
	Time period	Key reminder switch	Ignition switch	Door switch	Hood switch	Rear hatch switch	Door lock switch	Door key cylinder switch	Rear hatch lock key cylinder switch	Warning	Security lamp
Off	—	ON (at least one is ON)		—	—	—	—	—	—	—	OFF
Initial	—	OFF	OFF	OFF	OFF	OFF	—	—	—	—	OFF
Prearming 1	—	OFF	OFF	ON (at least one)			—	—	—	—	ON
Prearming 2	10 sec	OFF	OFF	OFF	OFF	OFF	OFF	OFF	OFF	—	ON
Arming 1	—	OFF	OFF	OFF	OFF	OFF	OFF	OFF	OFF	—	Flashes
Arming 2	—	OFF	OFF	OFF	OFF	OFF	OFF	OFF	—	—	Flashes
Alarm 1	5 min	—	ON (at least one)					OFF	OFF	Horn, headlights, & hazard warning lights flash, starter won't operate	OFF
Alarm 2	—	—	Alarm 1 condition					OFF	OFF	Starter won't operate	OFF

37U0TX-621

Explanation of Phases

Off:
The condition before the key is removed from the ignition switch. (The key is at either ON, ACC, or LOCK.)
The SECURITY lamp is OFF.

Initial:
The condition after the key has been removed from the ignition switch (with the doors, hood, and rear hatch closed).
The SECURITY lamp is OFF.

Prearming 1:
The condition in which the key is removed from the ignition switch and a door is open.
The SECURITY lamp is ON.

Prearming 2:
The condition in which the hood, rear hatch, and doors are closed and locked.
The SECURITY lamp is ON for 10 seconds.

Arming 1:
The condition after the security lamp has been ON for 10 seconds in the "Prearming 2" phase.
The SECURITY lamp flashes at intervals of 3 seconds. The alarm system is fully set.

Arming 2:
The condition in which the rear hatch may be opened by using the key while in the "Arming 1" phase.
The SECURITY lamp flashes.

Alarm 1:
The condition in which, without using the key, a door, the hood, or the rear hatch is opened or the ignition circuit is short-circuited. The horn sounds intermittently and the retractable headlights and the hazard warning lights flash for 5 minutes.
The starter cannot be operated during this period unless the key is used to cancel the alarm operation.

Alarm 2:
The condition (5 minutes after Alarm 1 was activated) in which the warning system (horn and lights) is deactivated. The starter remains inoperative unless the key is used to cancel the alarm operation.

AIR BAG SYSTEM

OUTLINE

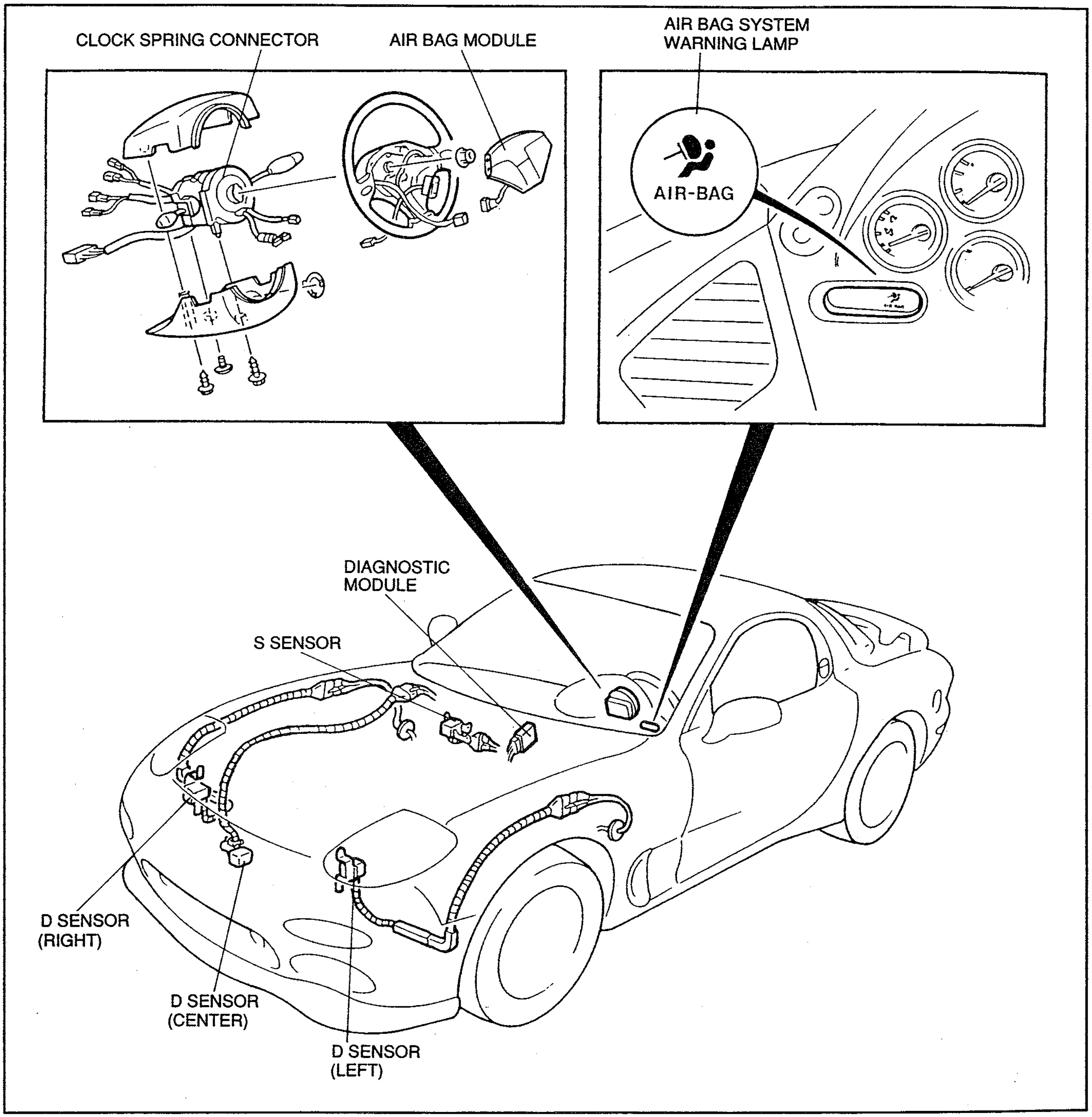

37U0TX-622

- The air bag system is included to provide increased protection for the driver in an accident when used in conjunction with the seat belts.
  When the vehicle suffers a frontal crash, the air bag in the steering wheel inflates to protect the driver's head and chest from injury.
- The air bag system consists of:
  - Air bag module
  - Clock spring connector
  - Diagnostic module
  - Crash sensors (D-sensors and S-sensor)
  - AIR BAG warning lamp
  - Air bag wiring harness

COMPONENT DESCRIPTION

Component		Function	Remark
AIR BAG system warning lamp		Lamp illuminates or flashes if malfunction occurs in air bag system	Located in instrument cluster
Air bag module		Deploys air bag when current flows to integrated igniter	Located in steering wheel hub
Clock spring connecter		Ensures uninterrupted electrical connection to air bag module while allowing turning of steering wheel	Part of combination switch
Crash sensor	D-sensor	Activated (closed) when crash impact detected With S-sensor, completes circuit to inflator	Located in front part of vehicle (left, right, and center)
	S-sensor	Activated (closed) when crash impact detected With D-sensor, completes circuit to inflator	Located on side of heater unit in passenger compartment
Diagnostic module		Monitors components and wiring harnesses in air bag system Indicates system malfunction by flashing or illuminating AIR BAG waring lamp If warning lamp is burnt, sounds warning buzzer Detects short circuit between air bag module and ground or crash sensor malfunction and melts system down fuse to prevent unintended air bag deployment	Contains backup battery

37U0TX-623

SYSTEM DIAGRAM

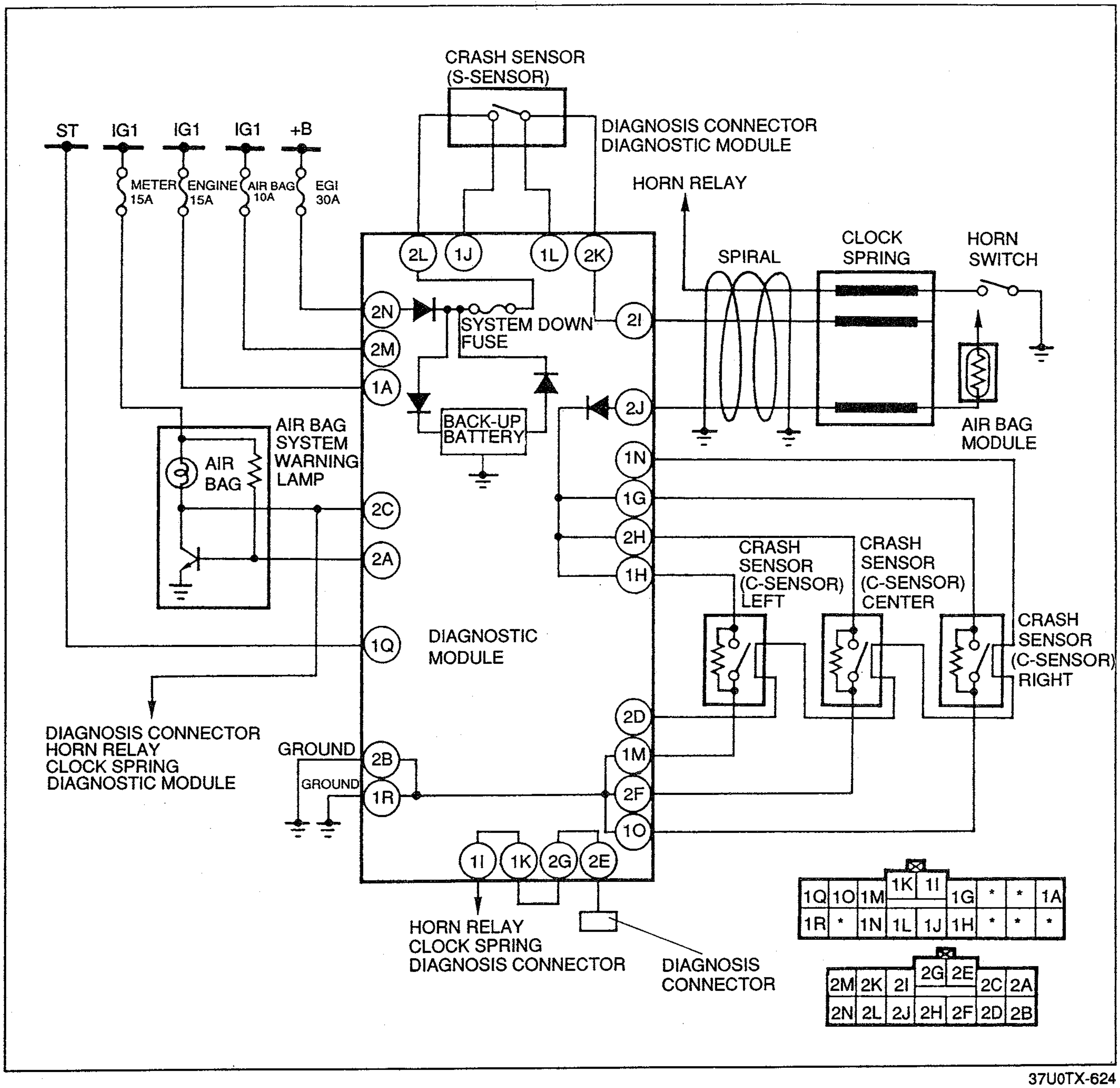

37U0TX-624

SYSTEM OPERATION

During Collision

- When either of the D-sensors and the S-sensor are activated (closed) simultaneously by the shock of a collision, the circuit to the inflator is completed.
- The inflator creates nitrogen gas and the air bag is deployed.
- The air bags vent the nitrogen gas from the vent holes on the back side of the bag to reduce shock to the driver and to allow easier exit from the vehicle.

During Normal Condition and Malfunction

- The diagnostic module constantly monitors the components and wiring of the air bag system for malfunction and open and short circuits.
- If a malfunction is detected, the diagnostic module illuminates or flashes the AIR BAG system warning lamp.
- In the case of a short circuit in the sensors or sensor wiring, the diagnostic module activates the AIR BAG system warning lamp and shuts down the system to prevent accidental deployment of the air bag.

AIR BAG MODULE

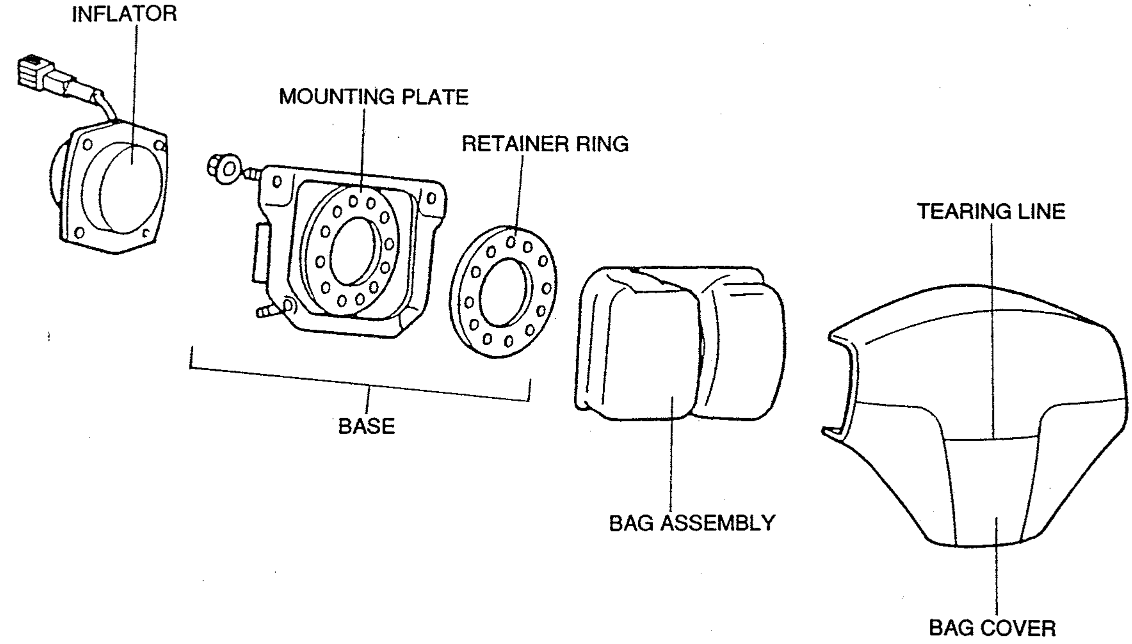

37U0TX-625

- The air bag module consists of the bag assembly, inflator, bag cover, and base.
- When the air bag module is activated, the inflator generates nitrogen gas. By this gas, the air bag is inflated and pops out from the bag cover, which opens at the tear line.
- The air bag vents the nitrogen gas from the vent holes at the back side of the bag to reduce shock to the driver.
- The air bag module is replaced as an assembly if it malfunctions or if deployed.

INFLATOR

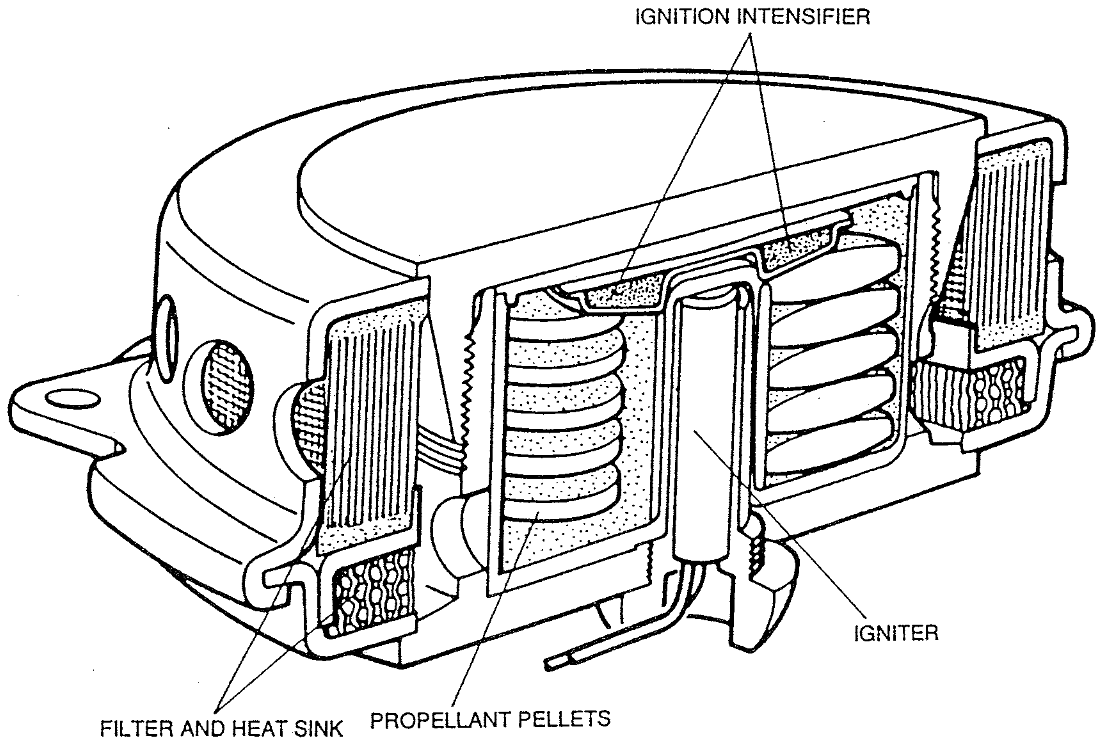

37U0TX-626

- The inflator is contained in the air bag module.
- When the inflator receives an electric signal from the sensor, the igniter ignites, combusts the ignition intensifier, then the propellant pellets, generating the nitrogen gas.
- The filter and heat sink cools and filters the gas as it inflates the air bag.
- To prevent the inflator from being damaged, and possibly not working when necessary, it is designed to self-ignite if its temperature exceeds 190°C {374°F}. The self-igniting agent is mixed in the ignition intensifier to trigger the activation.

D-SENSOR

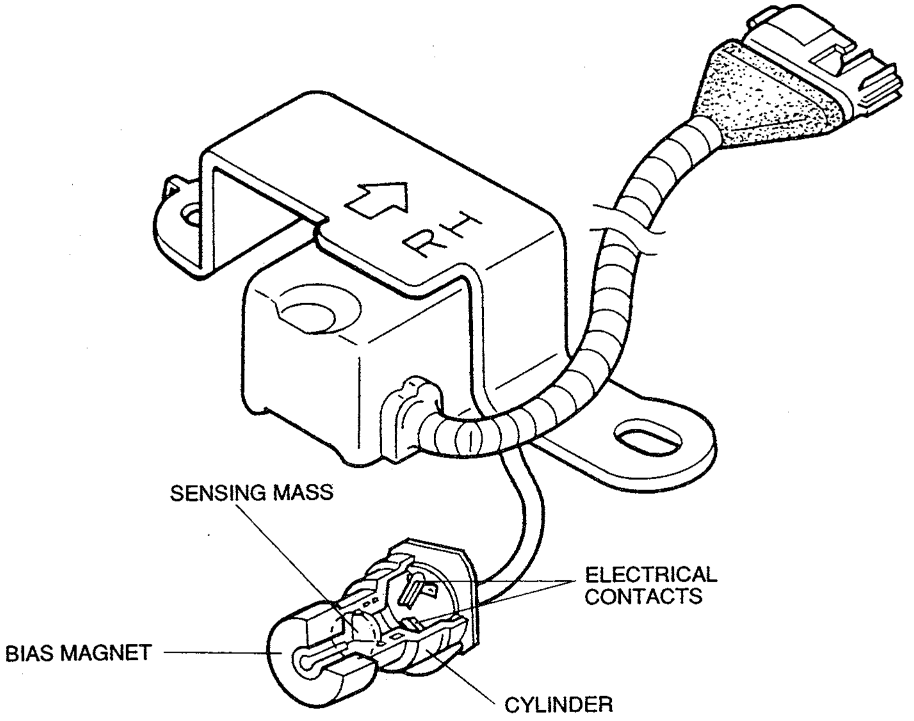

37U0TX-627

- Three D-sensors are equipped at the front of the vehicle for accurate detection of the vehicle speed change during a collision.
- The D-sensor consists of:
  Sensing mass (Detects deceleration ratio)
  Bias magnet (Holds sensing mass operation until set deceleration ratio is obtained)
  Cylinder (Contains air damper to control movement of sensing mass.)
  Two electrical contacts

D-SENSOR (Cont'd)

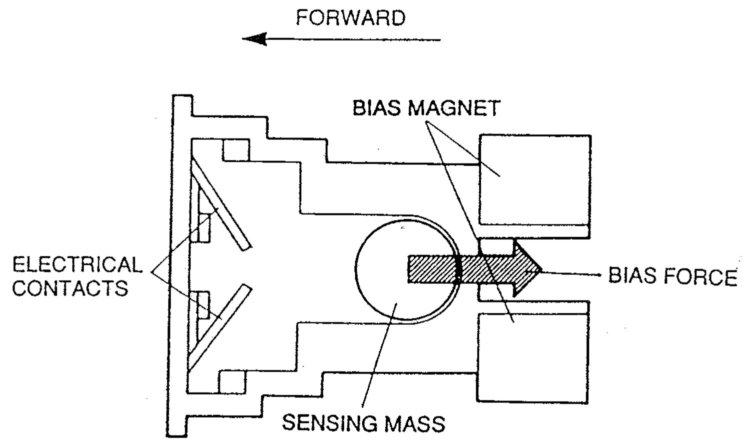

NORMAL CONDITION (OPEN)

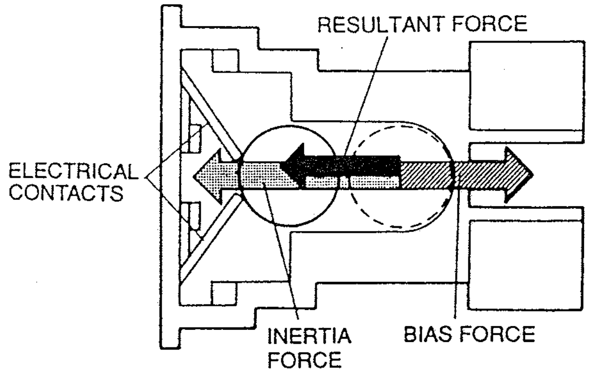

WHEN IMPACT OCCURS (CLOSED)

37U0TX-628

Operation

Normal Condition

The magnetic attraction of the bias magnet holds the sensing mass, causing the electrical circuit to remain open.

When Impact Occurs

If the forward inertia force that is generated is strong enough when an impact occurs, the sensing mass is pulled away from the bias magnet and rolls forward. As the sensing mass overcomes the force of the magnet, it touches the electrical contacts, completing a part of the air bag deployment electrical circuit.

S-SENSOR

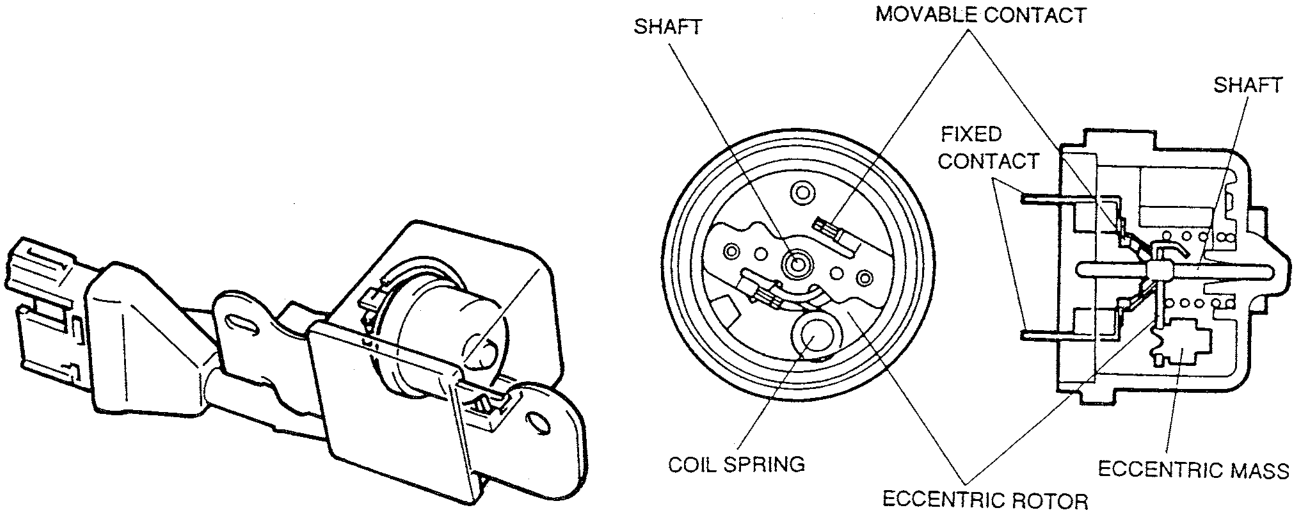

37U0TX-629

- The S-sensor is mounted on the side of heater unit in the passenger compartment to detect the vehicle's deceleration ratio in a collision.
- The S-sensor consists of:
  Eccentric mass (Detects deceleration ratio)
  Coil spring (Resists eccentric mass movement until set deceleration ratio is obtained)
  Eccentric rotor (Rotates according to deceleration ratio)
  Shaft (Supports eccentric rotor)
  Movable contact (Integrated with eccentric rotor)
  Fixed contact

S-SENSOR (Cont'd)

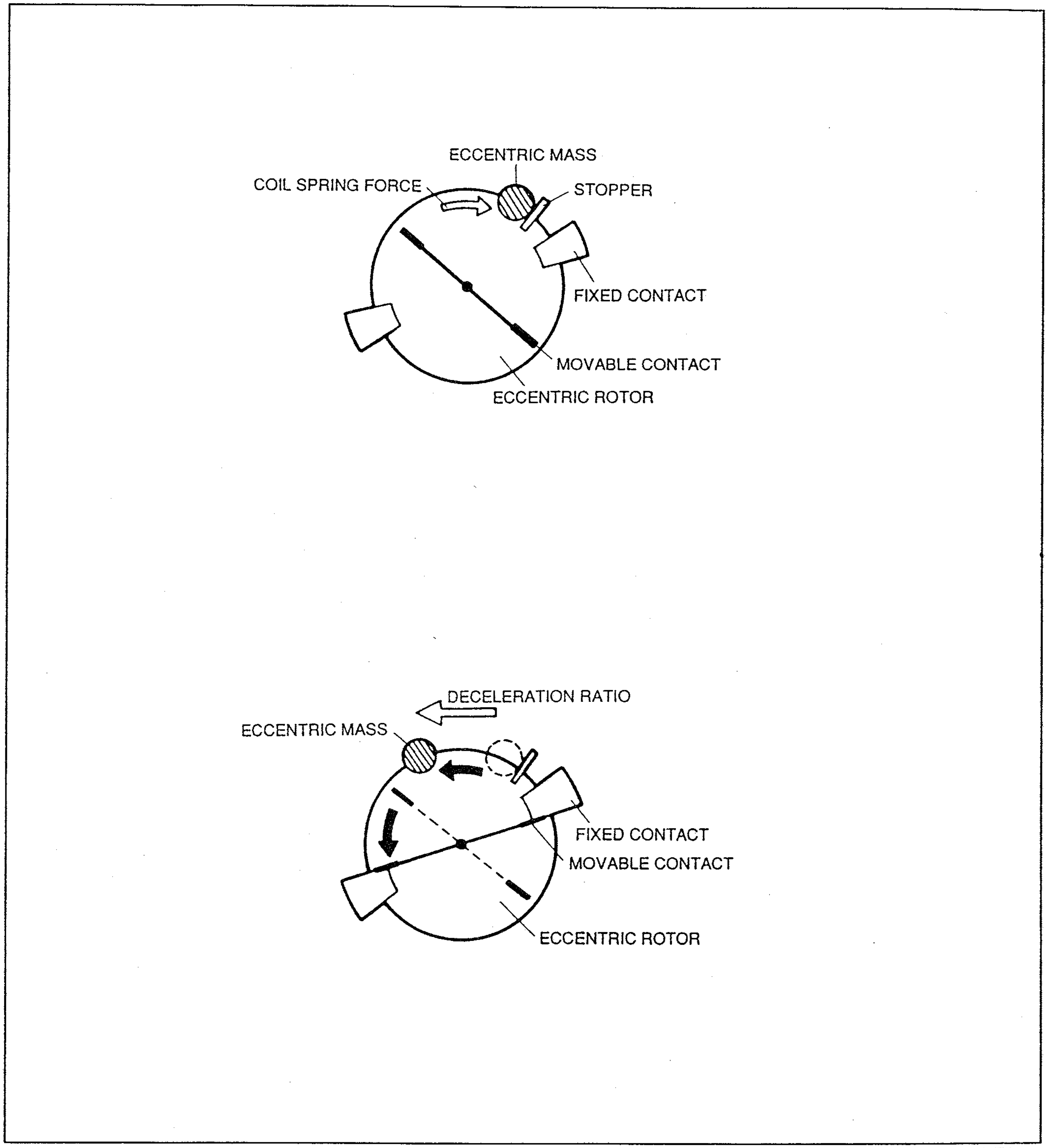

37U0TX-630

Operation

Normal Condition

The eccentric mass on the eccentric rotor is pressed against the stopper by the coil spring.

When Impact Occurs

The eccentric mass on the eccentric rotor receives the deceleration impact and the rotor (with movable contact) rotates.

The movable contact contacts the fixed contact, completing a part of the air bag deployment electrical circuit.

CLOCK SPRING CONNECTOR

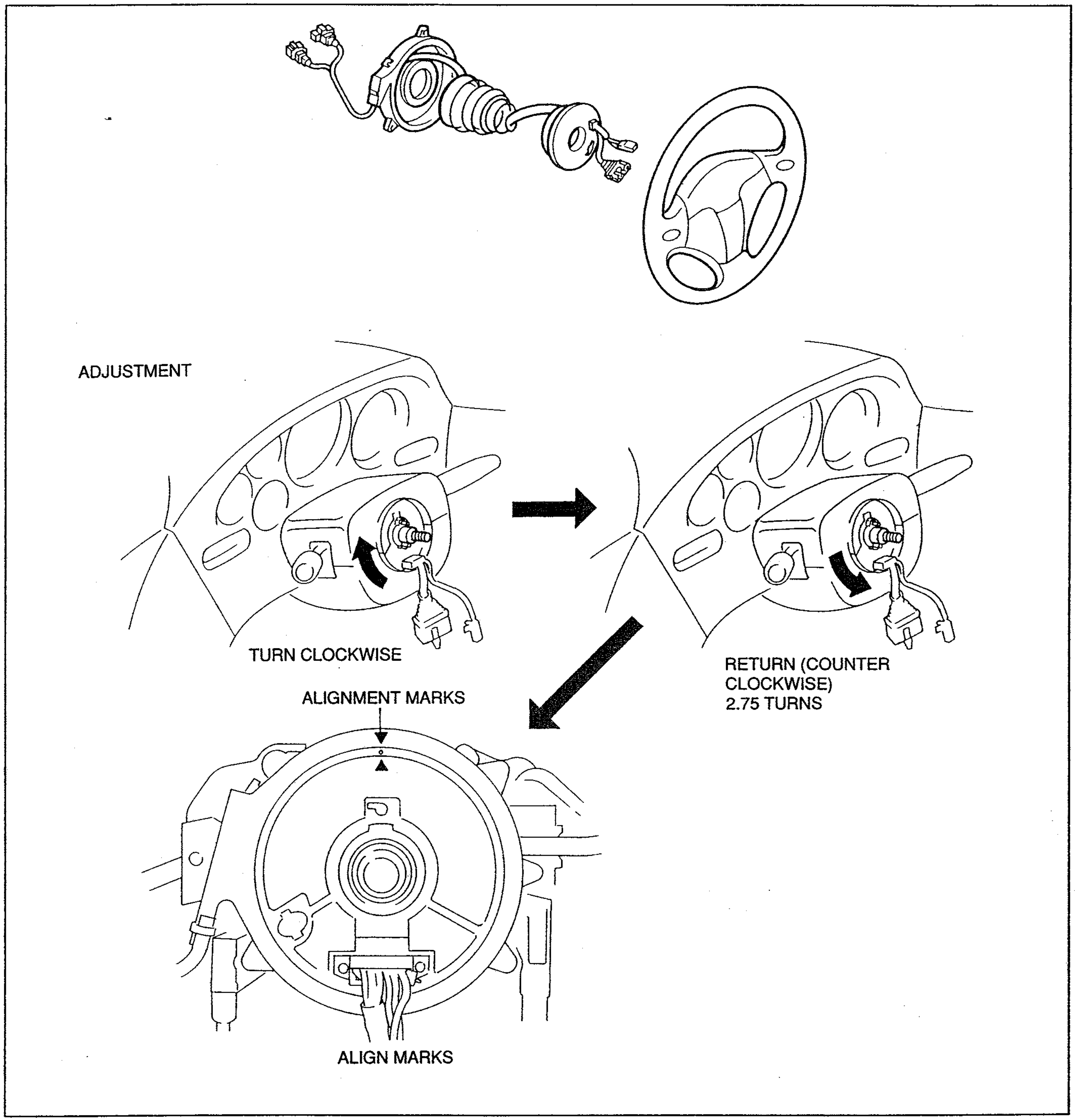

37U0TX-631

The clock spring connector is part of the combination switch.
This connector ensures uninterrupted electrical contact of the air bag module while allowing rotation of the steering wheel.
The clock spring connector and combination switch are serviced as an assembly.

Caution

- **Before reinstallation of the steering wheel after removal, set the clock spring connector as follows:**
  1. **Set the front wheels straight ahead.**
  2. **Turn the clock spring connector clockwise until it stops. (Do not force it.)**
  3. **Return the connector 2.75 turns.**
  4. **Align the marks on the clock spring connector to the outer housing.**

DIAGNOSTIC MODULE

- The diagnostic module contains a microcomputer that monitors the air bag system components and wiring harnesses.
- If a malfunction is detected in the system, the diagnostic module flashes or illuminates the AIR BAG system warning lamp.
- System faults can be determined by the coded warning lamp display.
- If a malfunction occurs in the system and the warning lamp is burnt, an audible alarm in the diagnostic module sounds.
- If a short circuit is detected between the air bag module and a ground or there is a malfunction of a crash sensor, the system down fuse in the diagnostic module melts to prevent unintended deployment of the air bag.
- The diagnostic module contains a backup battery to power the system and deploy the air bag in the event the vehicle's battery becomes disconnected in a collision.

37U0TX-632

AIR BAG SYSTEM WARNING LAMP

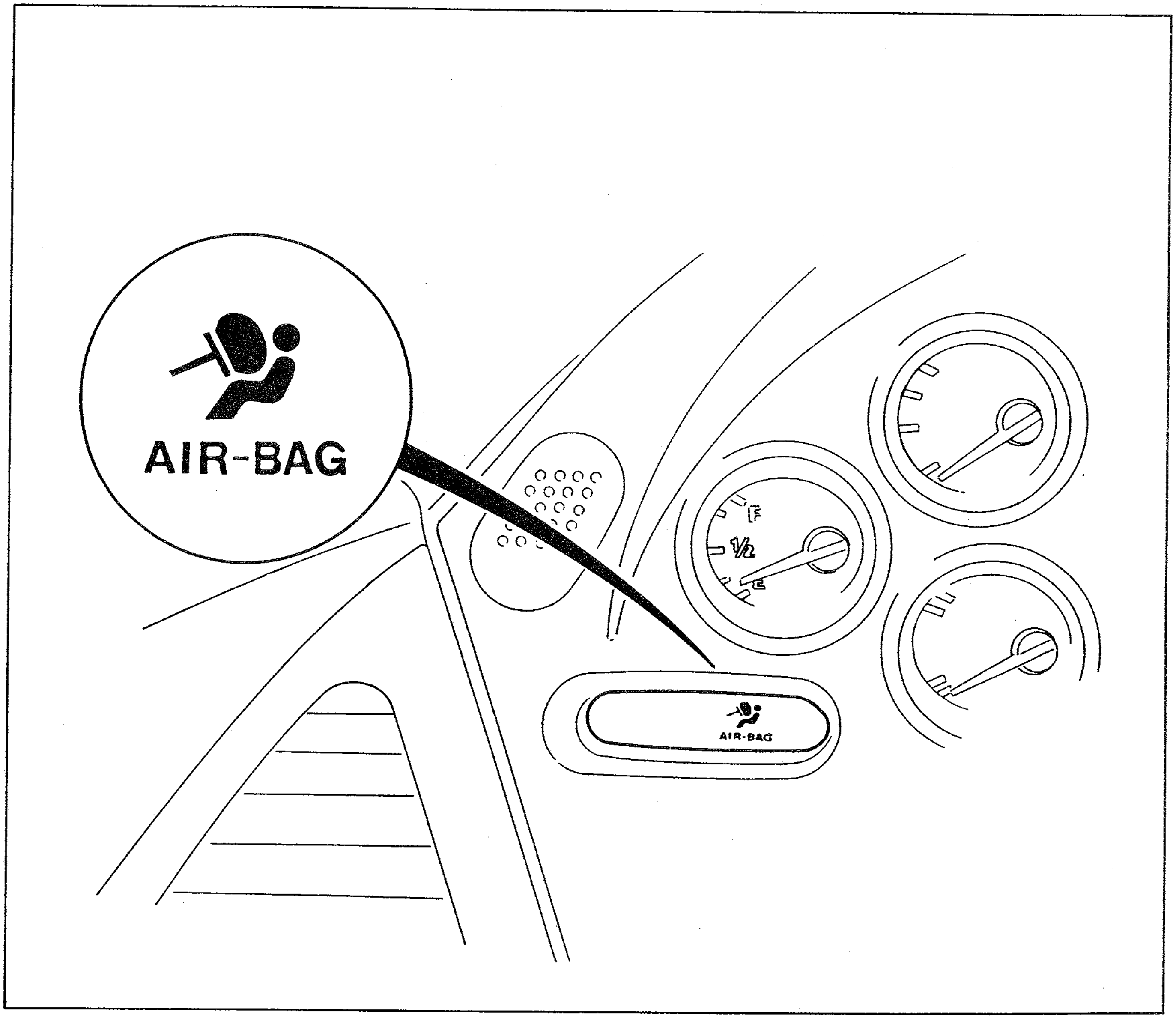

37U0TX-633

- The AIR BAG system warning lamp is located in the instrument cluster.
- The lamp flashes or illuminates to indicate malfunction of the air bag system.
- In normal conditions, when the ignition switch is turned ON, the warning lamp illuminates for 4-6 seconds, then goes off.
- If the warning lamp remains ON, does not illuminate, or flashes, a problem exists in the air bag system. Check the system following the troubleshooting procedure on the next page.

TROUBLESHOOTING PROCEDURE

- The air bag diagnostic module contains a self-diagnosis function.
- This self-diagnosis function flashes or illuminates the AIR BAG system warning lamp in the instrument cluster to indicate trouble in the air bag system.
- The malfunctioning system can be determined by the warning lamp illumination or coded flashing pattern.

Flowchart

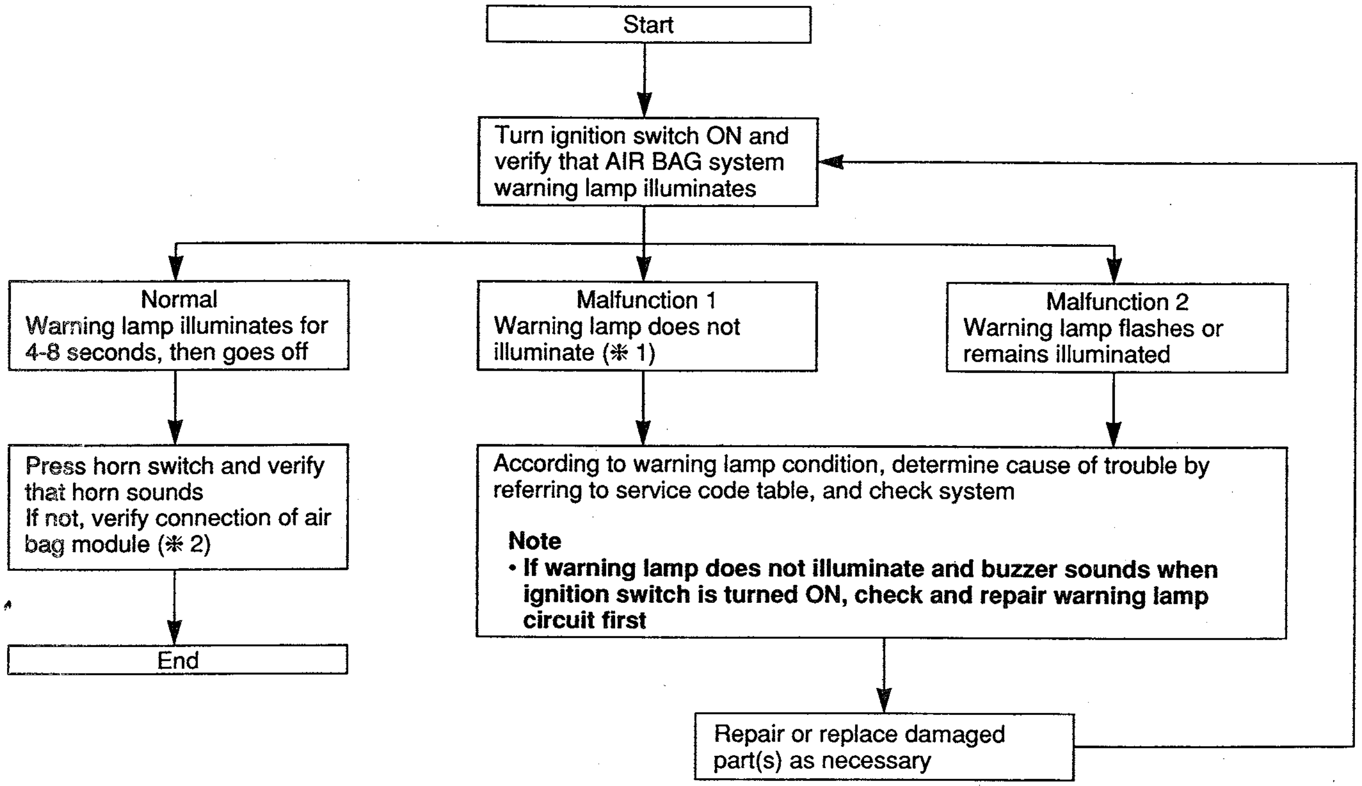

37U0TX-634

✻1: If a malfunction occurs in the air bag system and the warning lamp is burnt, the warning buzzer in the diagnostic module sounds 5 cycles of 5 times each.

✻2: The air bag module and horn switch are connected to the clock spring connector.
If the horns do not sound, check the air bag module connector connections.

Service code table

Priority	Service code (warning lamp)	Possible cause
1	Remains ON	Damaged diagnostic module or poor connection of diagnostic module connector
2	Flashes three times	Open circuit or poor connection of power source circuit
3	Flashes five times	Damaged D-sensor (D-sensor ON)
4	Flashes ten times	Damaged diagnostic module (system-down fuse burnt)
5	Flashes four times	Damaged S-sensor
6	Flashes six times	Damaged air bag module or poor connection of clock spring connector
7	Flashes nine times	Open circuit between diagnostic module and D-sensor

37U0TX-635

Note

- **If two or more troubles exist in the air bag system, the warning lamp indicates the cause of the trouble with the highest priority.**

SERVICE PRECAUTION

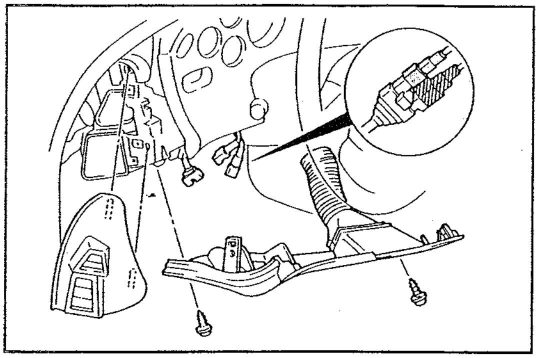
37U0TX-636

1. Before Component Replacement

- Before replacement of any air bag system component or before disconnecting any connector of the system, carry out the following preparations.
  (1) Disconnect the negative battery cable.
  (2) Remove the lower panel and the lap duct.
  (3) Disconnect the clock spring connector (orange and blue).

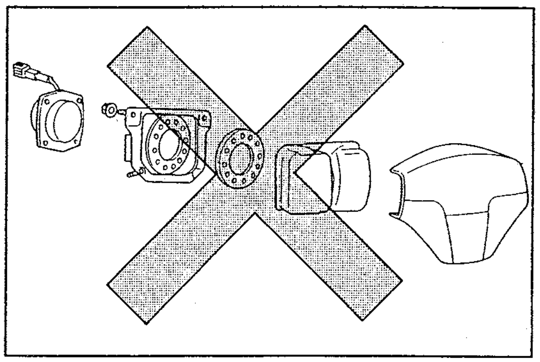
37U0TX-637

2. Prohibitation of Component Disassembly

- The components of the air bag system are not intended to be disassembled for service.
  If a component malfunction is indicated by the diagnostic module, replace the suspected component after checking the connections and the wiring harness.
  Do not disassemble any component.

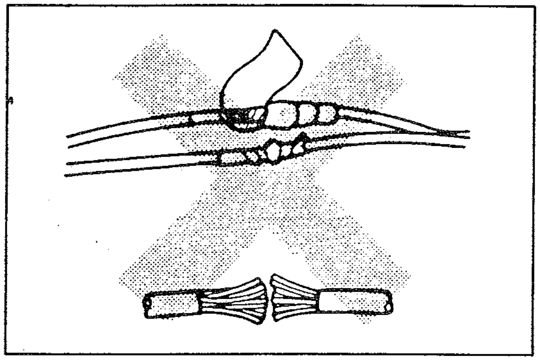
37U0TX-638

3. Prohibitation of Wire Harness Repair

- If an open circuit is found by a continuity test, replace the wiring harness. Do not try to repair the wiring.

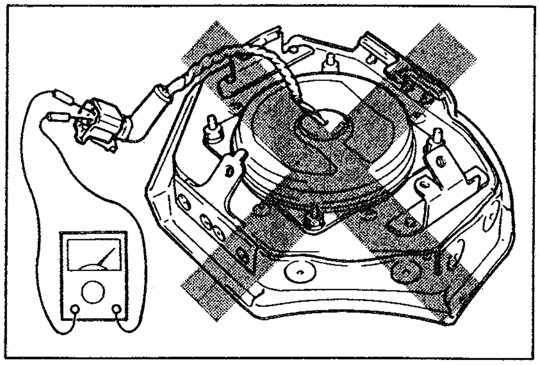
37U0TX-639

4. Handling of Air Bag Module

- Do not use an ohmmeter for inspection of the air bag module. It may cause accidental deployment of the air bag.

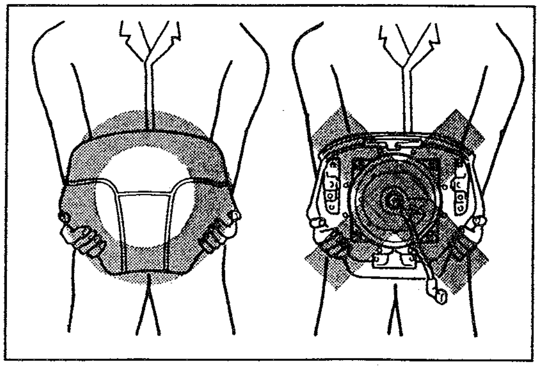
37U0TX-640

- When carrying a live (unactivated) air bag module, make sure the trim cover is pointed away from your body to prevent personal injury in the event of an accidental deployment.

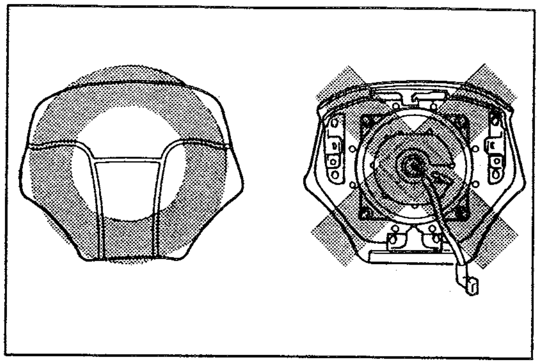

37U0TX-641

- When placing a live air bag module on any surface, always face the trim cover upward to reduce the motion of the module if it is accidentally deployed.

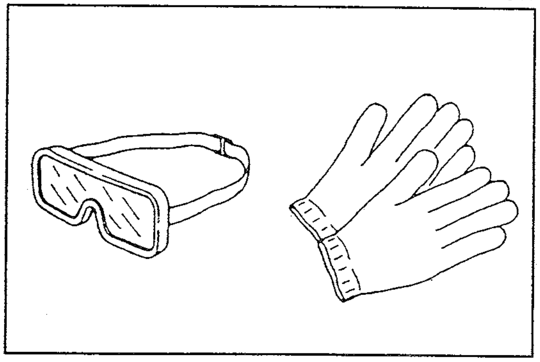

37U0TX-642

- When handling a deployed air bag module, wear gloves and safety glasses, because the deployed air bag module may contain deposits of sodium hydroxide, a caustic by-product of the gas generant combustion.
- When an air bag module is to be disposed, follow the procedure recommended for the specific situation.

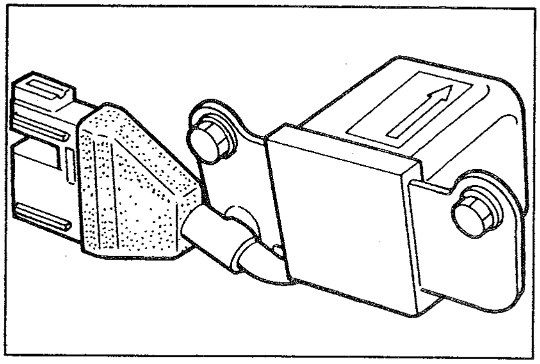

37U0TX-643

5. Crash Sensor Installation
   - Crash sensor orientation is very important for proper operation. If a vehicle is involved in a collision where its front sheet metal is damaged, inspect the body structure at the sensor mounting area for deformation. If damaged, restore it to its original shape.

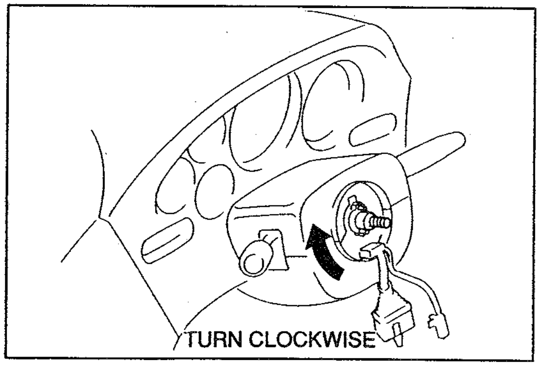

37U0TX-644

6. Adjustment of Clock Spring Connector
   - Whenever the steering wheel is removed, before reinstalling it, set the clock spring connector as follows:

     (1) Set the front wheels straight ahead.

     (2) Turn the clock spring connector clockwise until it stops. (Do not force it.)

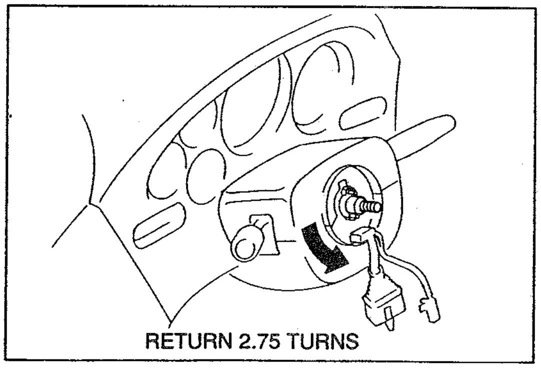

37U0TX-645

     (3) Return the connector 2.75 turns.

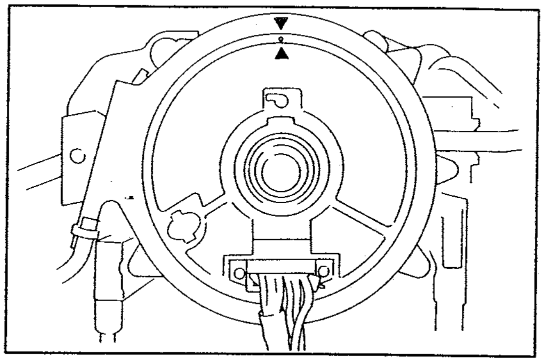

37U0TX-646

(4) Align the marks on the clock spring connector and the outer housing.

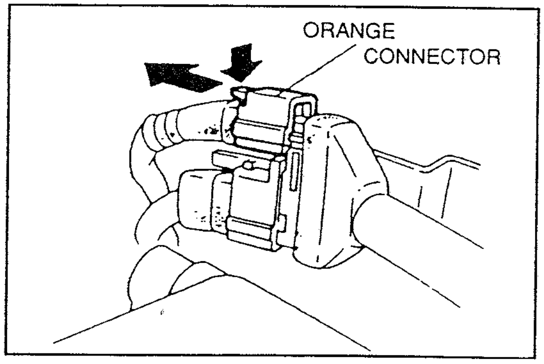

37U0TX-647

7. When Using Test Lead
- When using a test lead for testing, use a fine wire to prevent damage to the terminals.

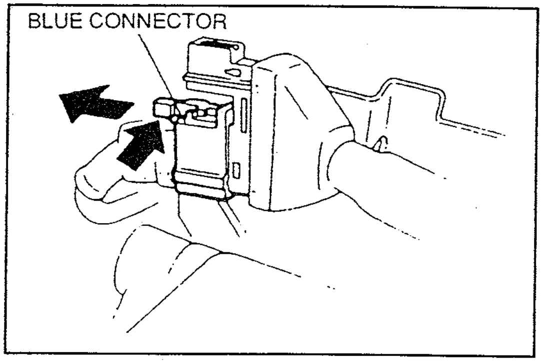

37U0TX-648

8. Disconnecting Double-Lock Type Connector
- The connectors in the air bag system use a double-lock type connector.
- These connectors are disconnected as follows.
  (1) Press the orange knob and disconnect the orange connector.

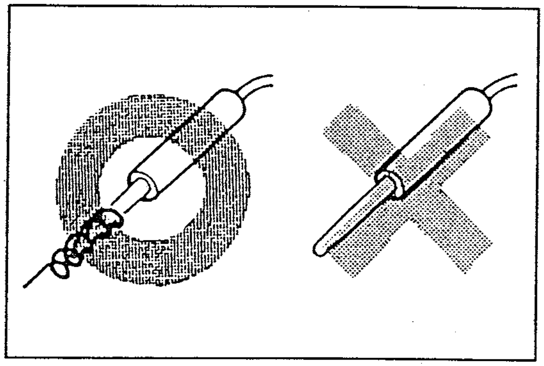

37U0TX-649

(2) Press the blue knob and disconnect the blue connector.
(3) Connect the connectors in the reverse order of disconnecting.

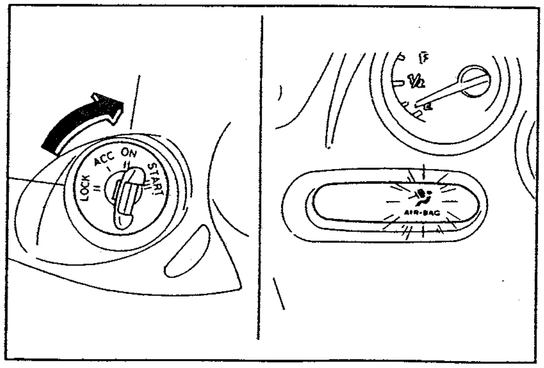

37U0TX-650

9. After System Service
- Verify correct system operation by checking with the AIR BAG system warning lamp. If the system is operating normally, the warning lamp will come on when the ignition switch is turned ON, then go off after approximately 6 seconds.
- Check if the horn sounds. If the horn does not sound, remove the air bag module and check the connections of the air bag module and horn switch connectors.

AIR BAG MODULE DISPOSAL PROCEDURE

- Before a vehicle with an undeployed air bag module is scrapped, the air bag **must be deployed** following the procedure shown below.
- If the **SST** (deployment tool) for deployment of the air bag module is not available, consult the nearest Mazda representative for assistance.
- Never dispose of a live air bag module.
- When disposing of a previously deployed or self-deployed air bag module, observe the following procedures.

37U0TX-623

Cautions on air bag module disposal

1. **Before disposal of an undeployed air bag module, be sure to deploy it following "Procedure" shown below.**
2. **Deployment must be done in a safe, open space, avoiding strong winds.**
3. **Use the SST (deployment tool) for deployment and stand at least 6 m (20 ft) away from the air bag module during deployment as it deploys with a loud sound.**
4. **Do not touch the air bag module for at least 15 minutes after deployment; it is very hot.**
5. **Do not pour water on the deployed air bag module.**
6. **When handling a deployed air bag module, wear gloves and safety glasses.**
7. **Place the deployed air bag module in a vinyl bag and seal it for disposal.**
8. **Wash your hands after the disposal operation is finished.**

29U0TX-895

Procedure

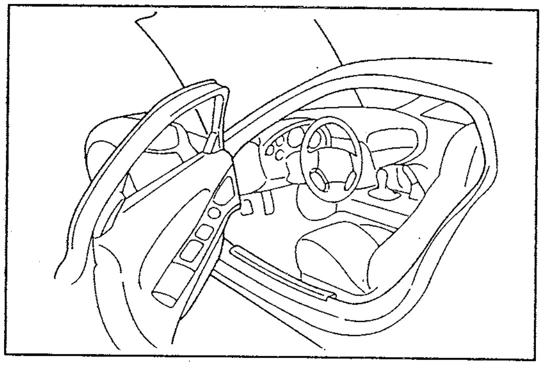

37U0TX-651

1. Locate the vehicle in a safe, open space, and open all of the vehicle's doors.
2. Disconnect the negative battery cable.

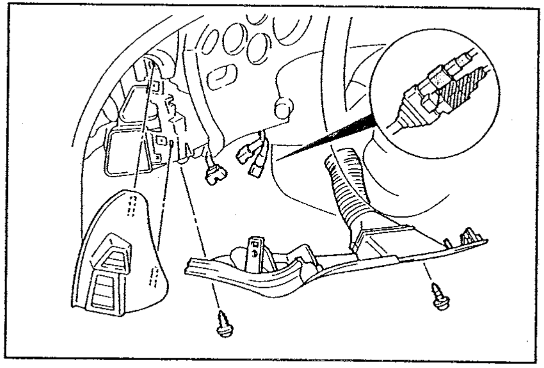

37U0TX-652

3. Verify that the air bag module is firmly mounted to the steering wheel.
4. Remove the lower panel and the lap duct.
5. Disconnect the clock spring connector.

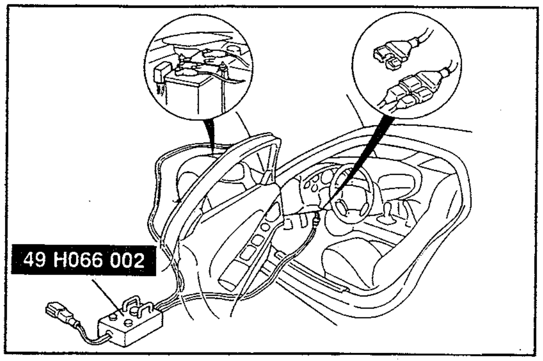

37U0TX-653

Caution
- **Before connecting the SST (deployment tool), be sure to inspect it for proper operation. (Refer to page T–89.)**

6. Connect the **SST** to the clock spring connector as shown in the figure.

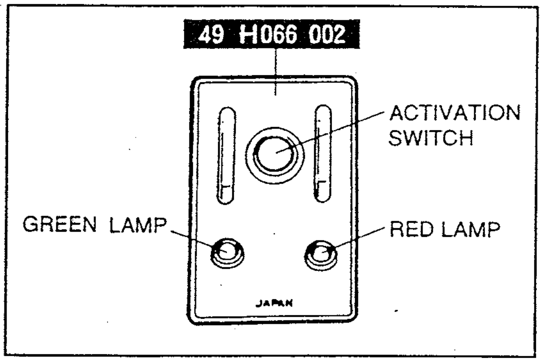

37U0TX-654

7. Connect the red clip of the **SST** to the positive battery terminal and the black clip to the negative terminal.
8. Verify that the red lamp of the **SST** illuminates.

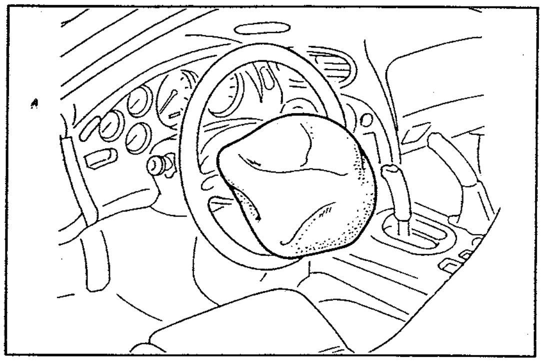

37U0TX-655

Warning
- **Before pressing the switch of the SST, verify that all persons are clear of the vehicle.**
- **Stand at least 6 m (20 ft) away from the air bag module during deployment as it deploys with a loud sound.**

9. Press the switch of the **SST** and deploy the air bag.

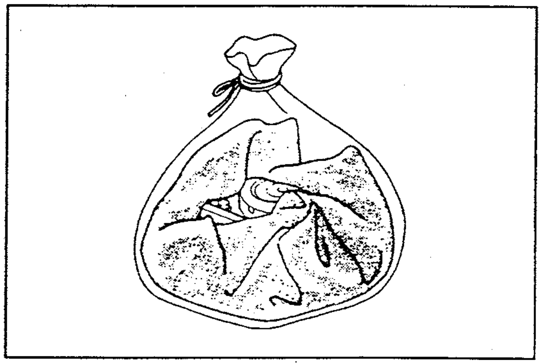

37U0TX-656

Disposal of Deployed Air Bag Module

Place the deployed air bag module in a vinyl bag, seal it, then dispose of it.

Caution
- **Do not touch the deployed air bag module for at least 15 minutes; it is very hot.**
- **Do not pour water on the deployed air bag module.**
- **When handling the deployed air bag module, wear gloves and safety glasses.**
- **Wash your hands after the disposal operation is finished.**

INSPECTION OF SST (DEPLOYMENT TOOL)

- Use the **SST** (deployment tool) to deploy a live air bag module before disposing of it.
- Before connecting the **SST** to the clock spring connector, inspect its operation.

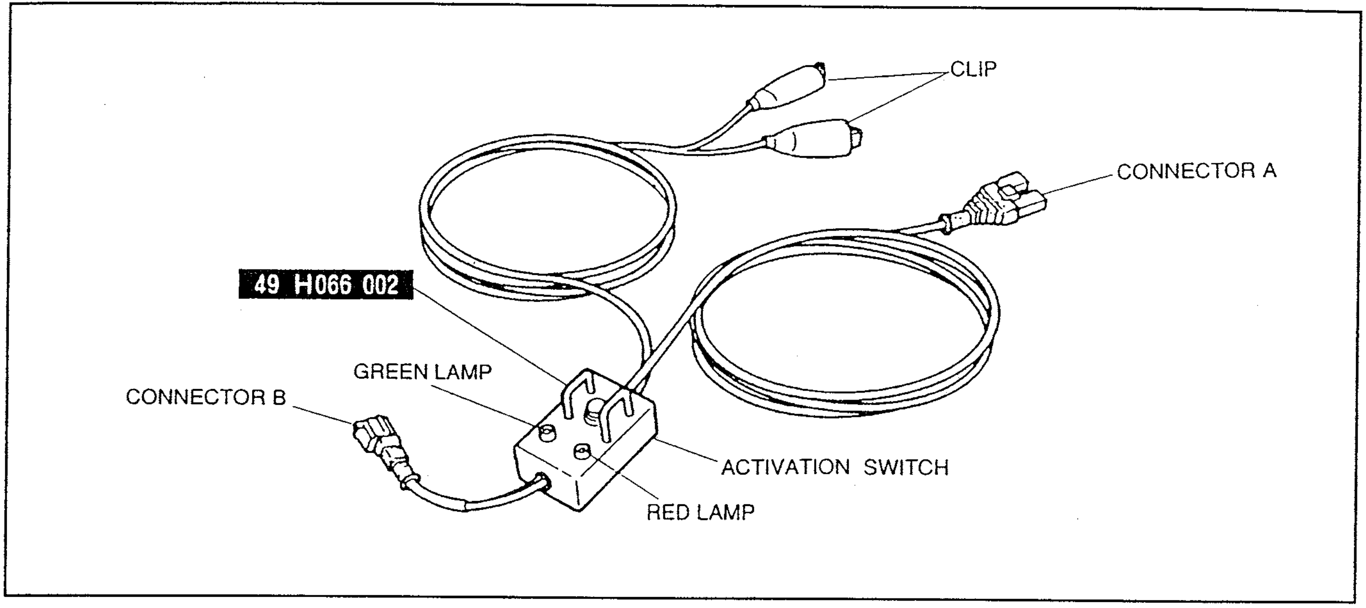

37U0TX-657

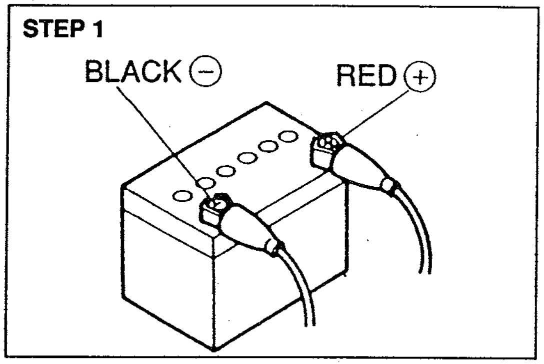

37U0TX-658

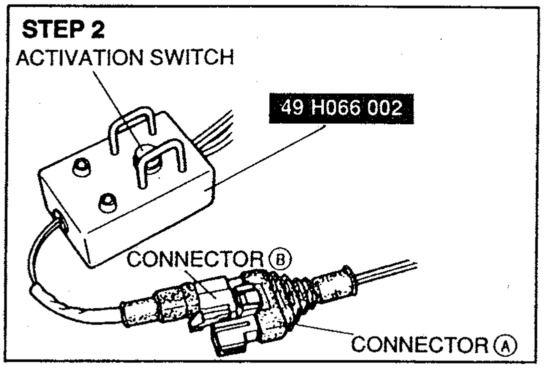

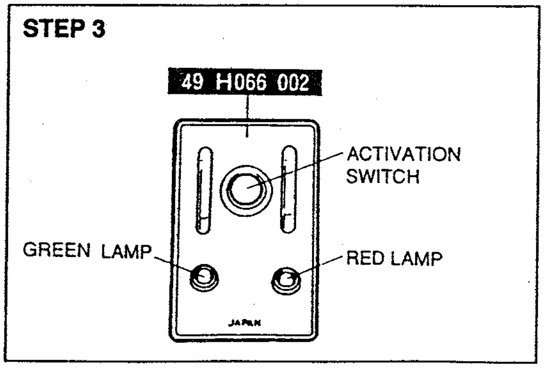

Inspection Procedure

1. Inspect operation of the **SST** by following the steps below.

Step	Inspection procedure	SST lamp	
		Green	Red
1	Connect red clip to positive battery terminal and black clip to negative battery terminal	ON	OFF
2	Interconnect connectors A and B of **SST**	OFF	ON
3	Press activation switch	ON	OFF

2. If not as specified, do not use the **SST** because it may cause the air bag to unexpectedly deploy upon connection to the clock spring connector.

HEATER AND AIR CONDITIONER SYSTEMS

37U0UX-501

OUTLINE

OUTLINE

- The air conditioner is normally equipped to all Canada models and U.S. models with the sun roof. The MANA air conditioner is optionally available to U.S. models with the normal roof.
- The MANA air conditioner is optionally available to some U.S. model.
- Permeation permeance-resistant hoses and a high-efficiency heat exchanger minimize the refrigerant consumption and leakage.

37U0UX-502

FEATURES

To improve air-conditioning efficiency —— Adoption of high-efficiency heat exchanger.

37U0UX-503

SPECIFICATIONS

Item			Specification
Heater	Heating capacity {kcal/h}		3,150
	Blower motor	High setting {m³/h}	420
		Energy consumption {W}	210
Refrigerant system	Cooling capacity {kcal/h}		3,900
	Compressor	Type	Rotary compressor
		Capacity cm³/rev {cu in/rev}	138 {8.42}
	Condenser	Type	Multiflow
	Receiver/ Drier	Capacity cm³ {cu in}	NIPPON DENSO 274 {16.72} MANA 340 {20.75}
		Desiccant	Desiccant
	Evaporator	Type	Drawn cup
	Expansion valve	Type	External pressure equalizer
	Control device		Pressure switch 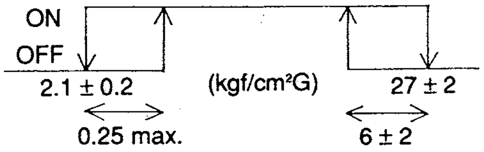

37U0UX-504

HEATER AND REFRIGERANT SYSTEMS

STRUCTURAL VIEW

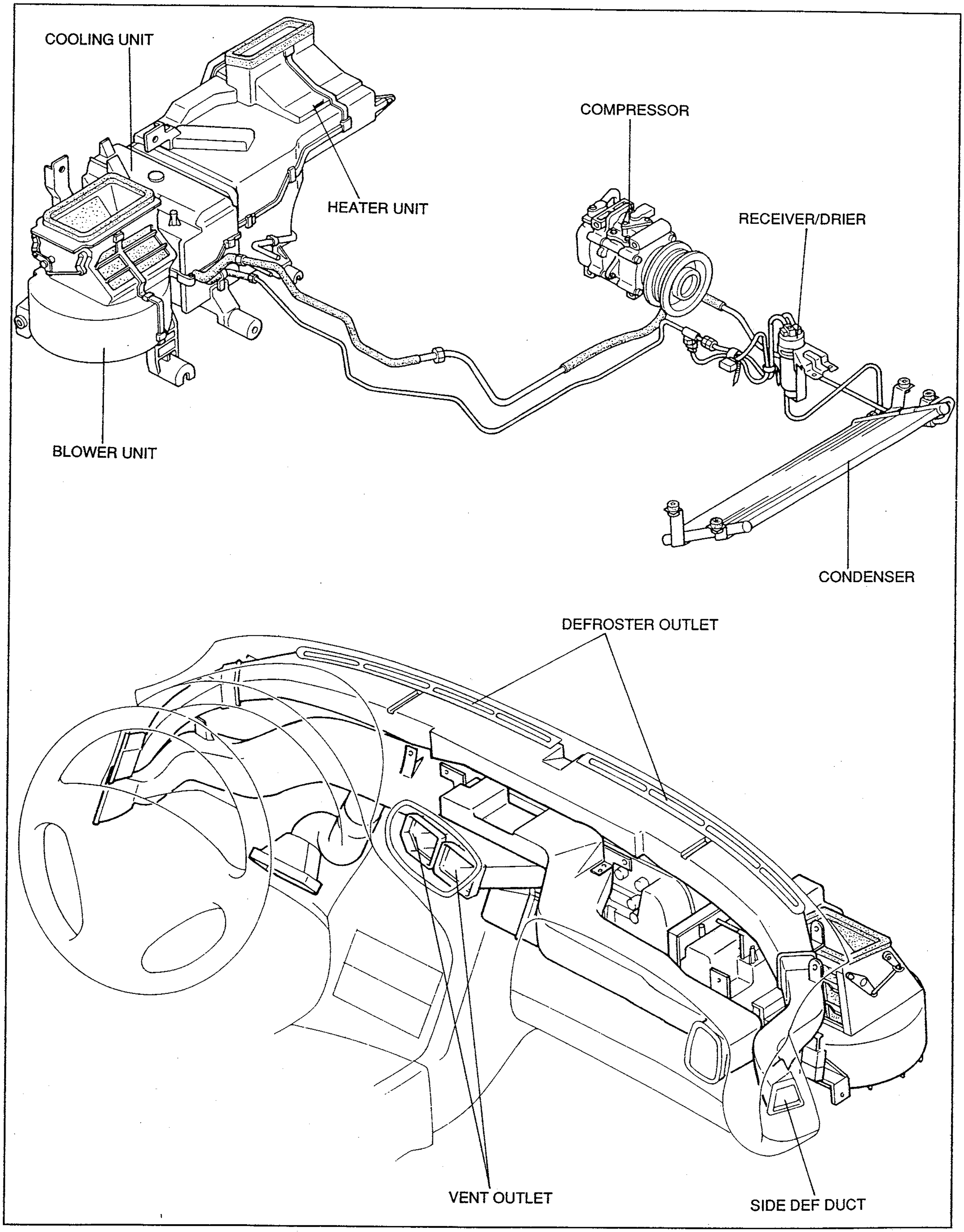

37U0UX-505

HEATER UNIT

The heater unit consists of the heater core, mix doors, airflow mode doors, control actuators, and water thermosensor.

Heater Core

The heater core warms the intake air with the engine coolant for heating in the passenger compartment. The output air temperature is adjusted by regulating the air passing over the heater core by adjusting the mix door opening angle.

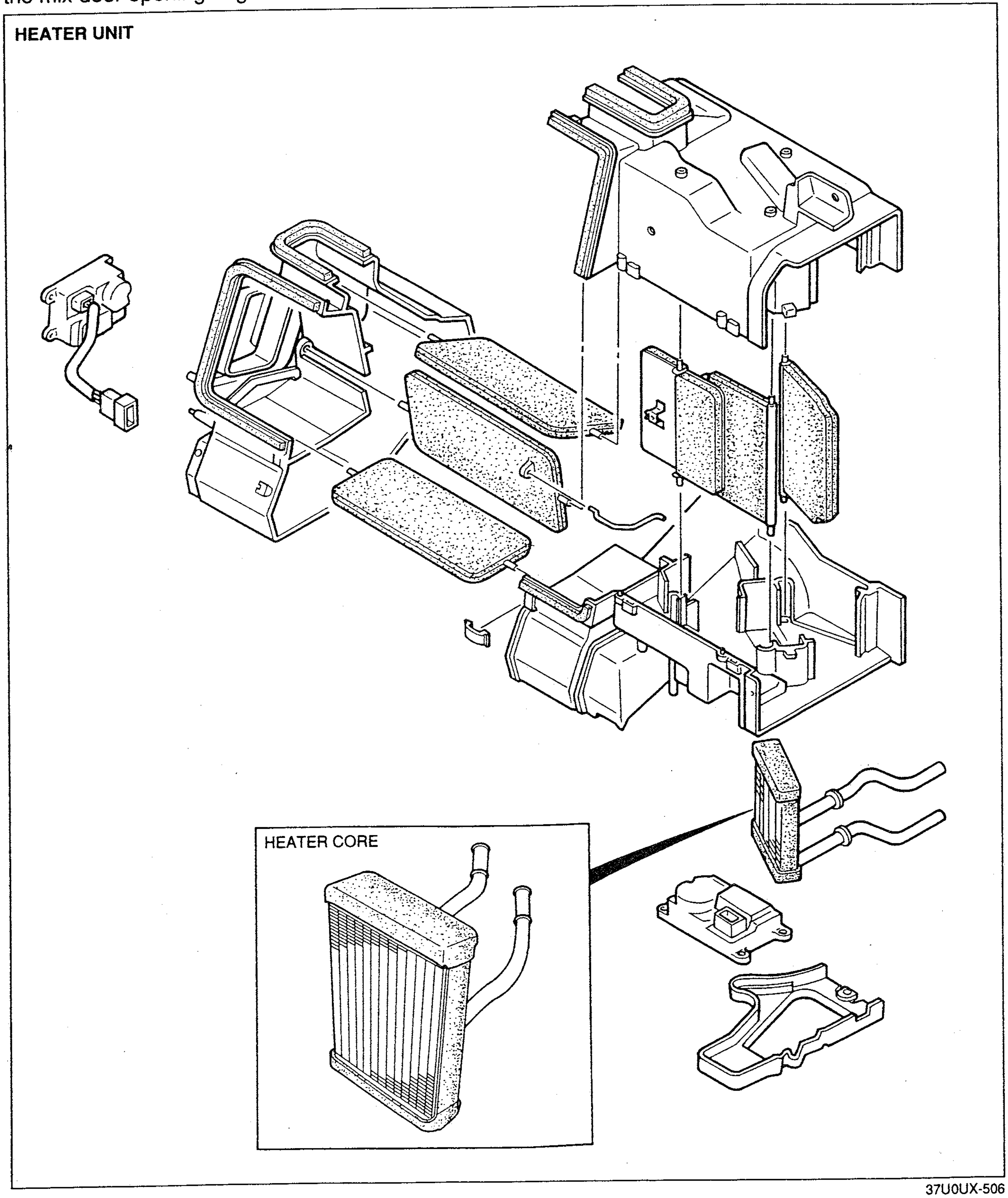

37U0UX-506

Mix Door, Airflow Mode Door, and Cool Air Bypass Door

The output air from the blower unit is adjusted by regulating the mix, airflow mode, and cool air bypass doors' opening angle.

Door operation

Door	Operation
Mix	Adjusts output air temperature
Airflow mode	Changes air outlet
Cool air bypass	Adjusts output air temperature from vent outlets

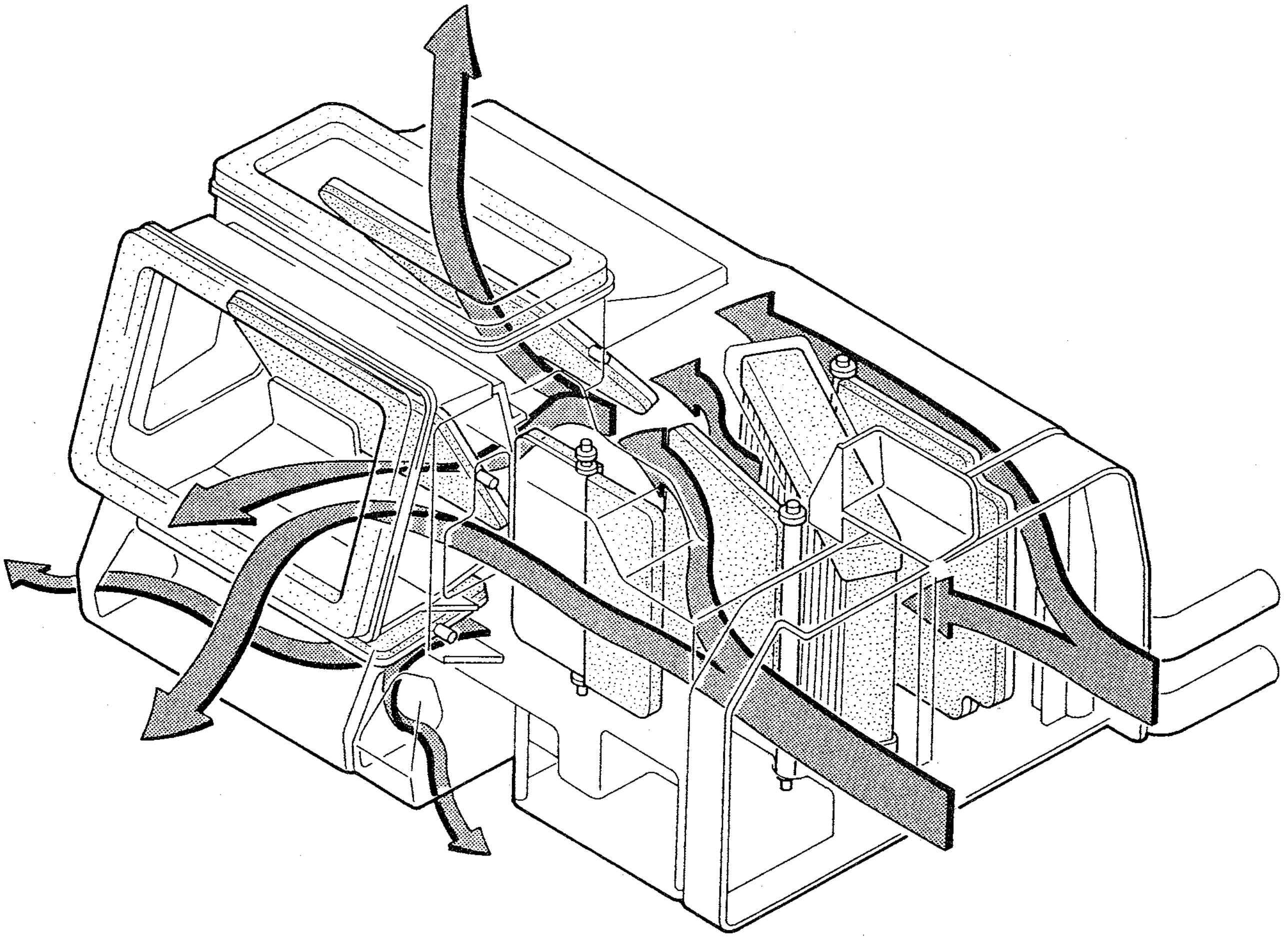

37U0UX-507

BLOWER UNIT

The blower unit consists of the blower motor, resistor assembly, intake door, and intake actuator. The blower unit is used to select the fresh air intake mode and the air recirculation mode, and to produce forced air for the systems operation.

Blower Motor

The blower motor produces forced air flow for the system's operation. The blower motor fan is a sirocco fan.

Resistor Assembly

The resistor assembly changes the blower motor load voltage in four stages according to the blower switch operation, controlling the blower motor operation speed.

Intake Door

The intake door is opened/closed by the intake actuator, and changes the air inlet to the blower unit.

BLOWER UNIT

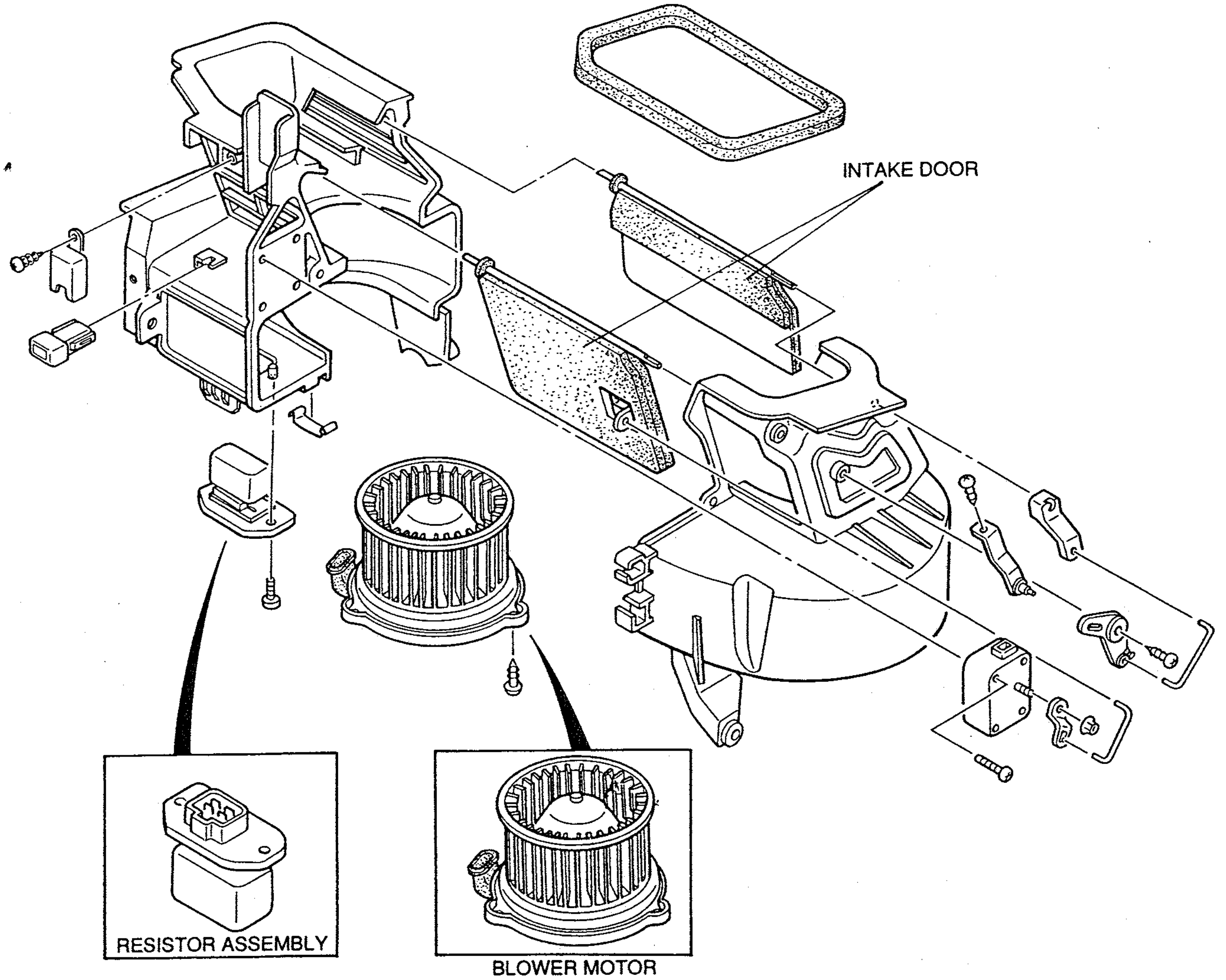

37U0UX-508

COOLING UNIT

The cooling unit consists of the evaporator, expansion valve, and thermistor. The cooling unit cools and dehumidifies the air expelled from the blower unit.
The MANA cooling unit functions identically as the Mazda-provided unit while the configuration is different.

Evaporator

The evaporator vaporizes the refrigerant and cools the air within the cooling unit by the absorption of surrounding heat during the vaporization. The evaporator also dehumidifies the air and condensing it by collecting and removing moisture in the air into dew. The system uses the drawn cup type evaporator for improved heat exchanging efficiency and cooling effect.

Expansion Valve

The expansion valve quickly depressurizes the liquid refrigerant to turn it into mist for easy vaporization in the evaporator. **Type: External equalization**

Frost Switch

The frost switch opens the magnetic clutch circuit and stops compressor operation to prevent the refrigerant system from freezing when the evaporator fin temperature measured at the evaporator fin(s) is excessively low. The frost switch resumes its circuit and turns the magnetic closes to resume compressor operation when the temperature increases to specification.

COOLING UNIT

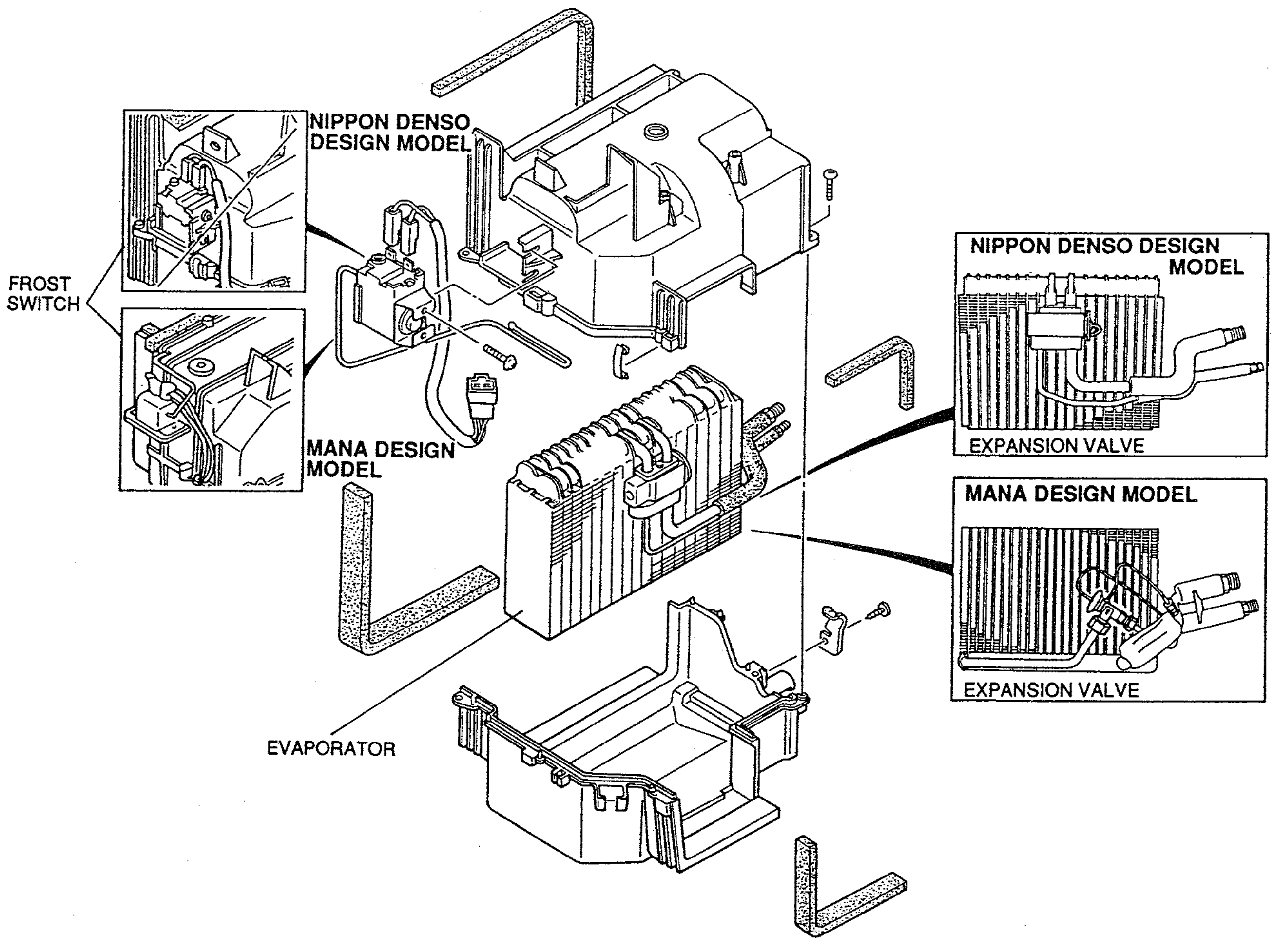

37U0UX-509

ACTUATORS
System Components

Mix actuator
The mix actuator adjusts the mix door opening angle via the link and rod.

Airflow mode actuator
The mode actuator opens/closes the mode door via the link, crank, and rod.

Intake actuator
The intake actuator rotates clockwise by electrical signal from the heater control unit, opening/closing the intake door via the link and rod. The combination of the sliding and common contact positions in the actuator determines the actuator stopping position.

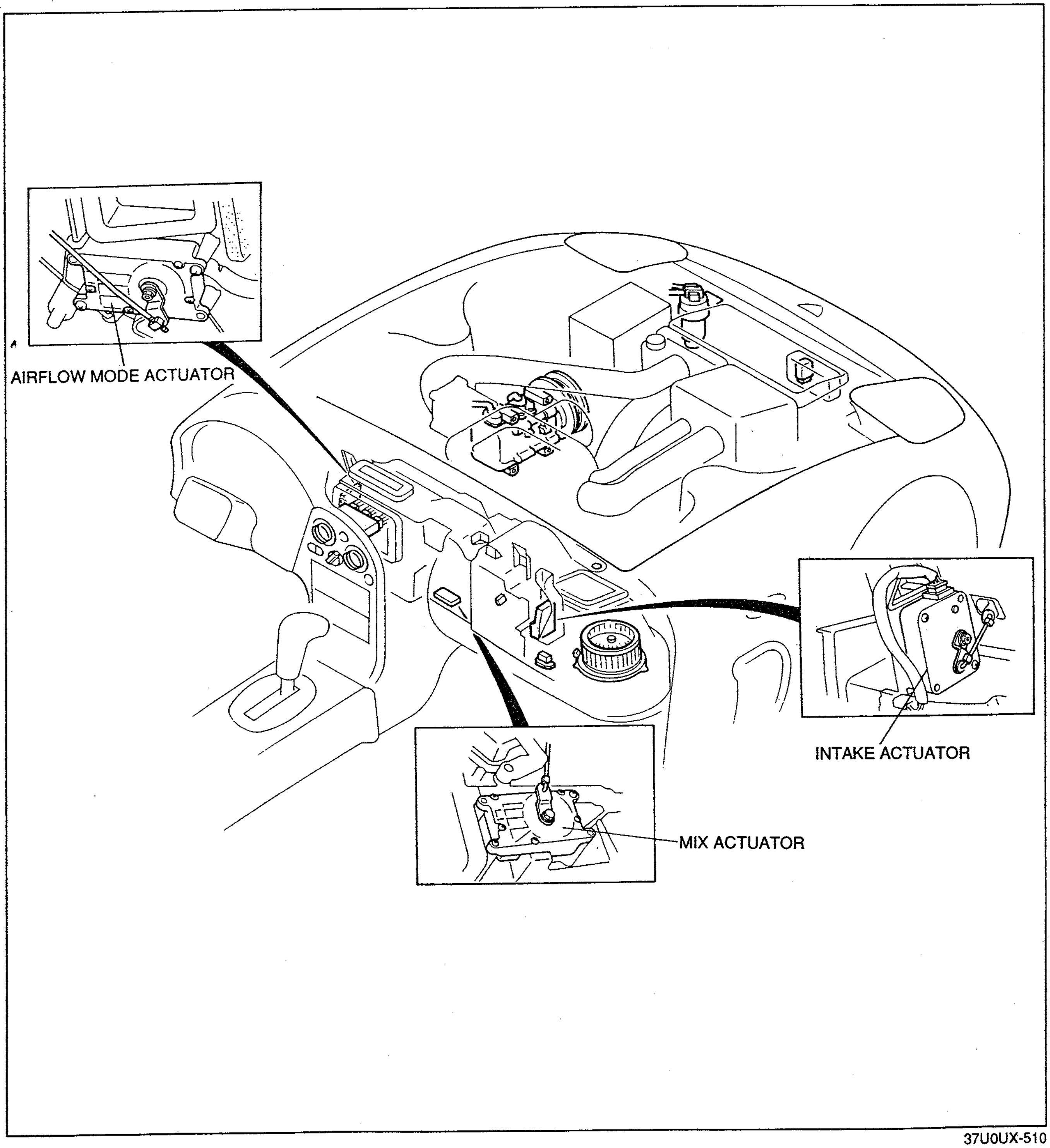

37U0UX-510

Actuator Internal Circuits

Mix actuator

Internal circuit	Applied voltage		Operation	
	(+)	(–)	Rotation	Door movement
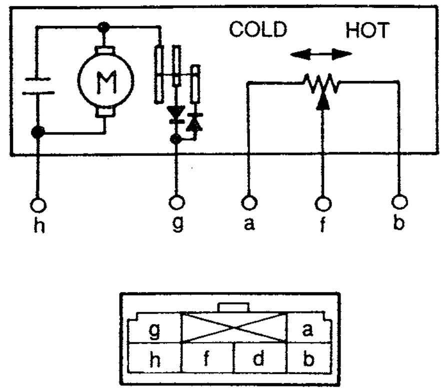	h	g	• Clockwise, shown from installation position	• Moves to HOT
	g	h	• Counterclockwise, shown from installation position	• Moves to COLD

37U0UX-511

Airflow mode actuator

Internal circuit	Applied voltage		Operation	
	(+)	(–)	Rotation	Door movement
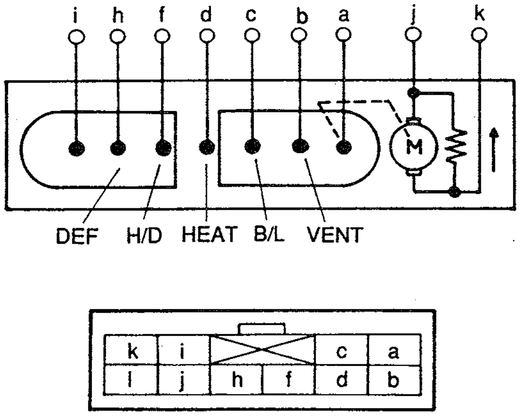	k	j	• Counterclockwise, shown from installation position	• Moves from VENT to DEF
	j	k	• Clockwise, shown from installation position	• Moves from DEF to VENT

37U0UX-512

Intake actuator

Internal circuit	Applied voltage		Operation	
	(+)	(–)	Rotation	Door movement
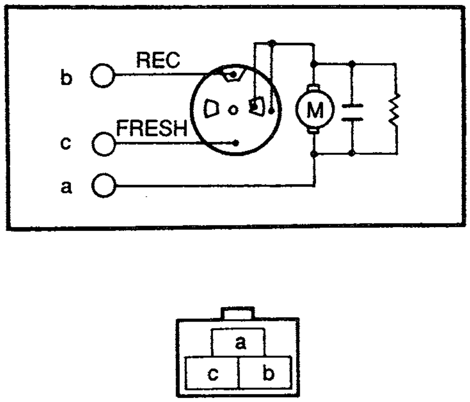	a	b	• C.C.W., shown from installation position	REC ◄——— FRESH
	a	c	• C.C.W., shown from installation position	REC ———► FRESH

37U0UX-513

COMPRESSOR

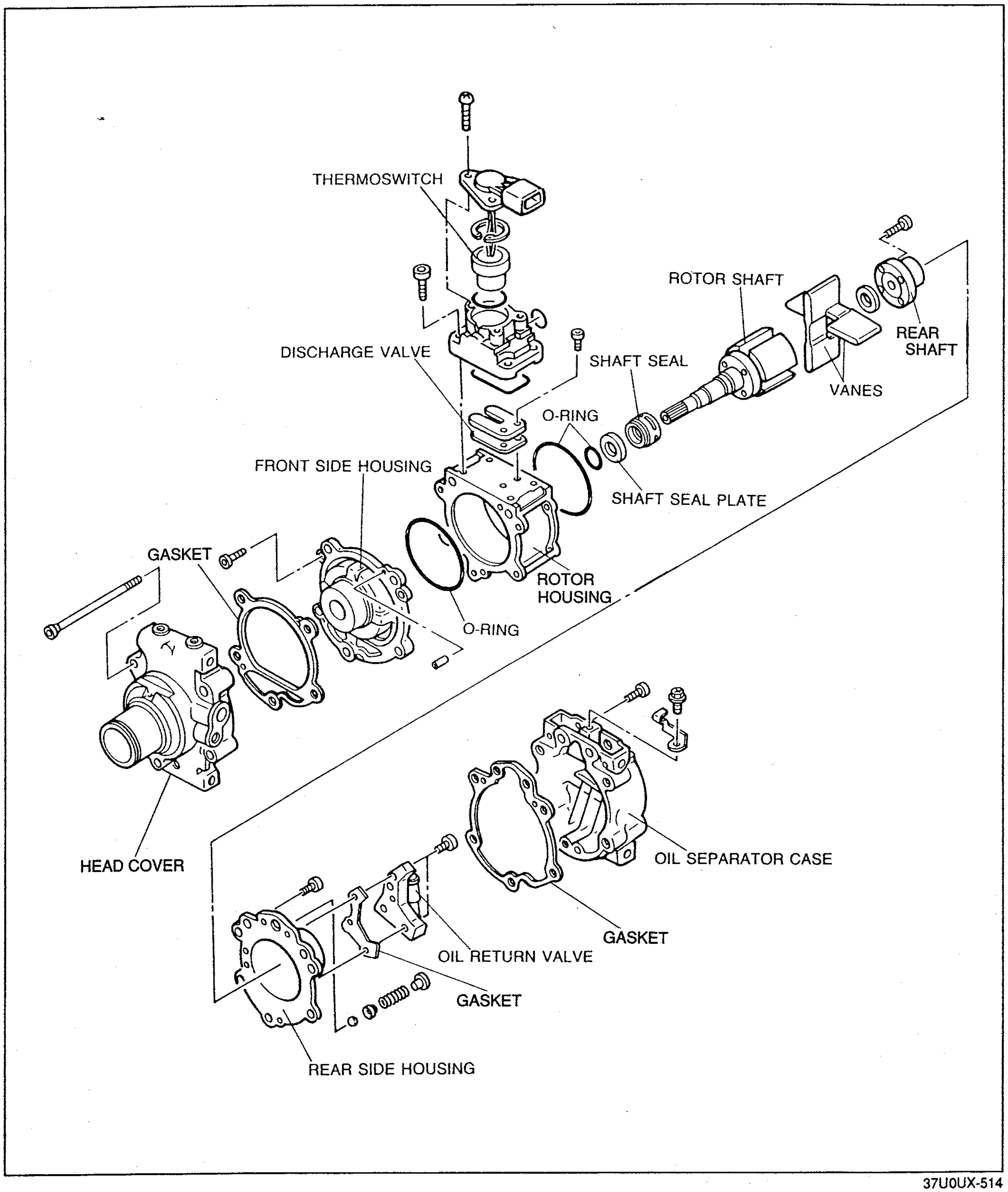

A through-vane Nippon denso TV14 model compressor is used.
The compressor is belt-driven via the engine crankshaft pulley.
The main features of the through-vane type compressor are:

- Little friction loss
- Compact size
- Quiet operation
- Few parts

Operation

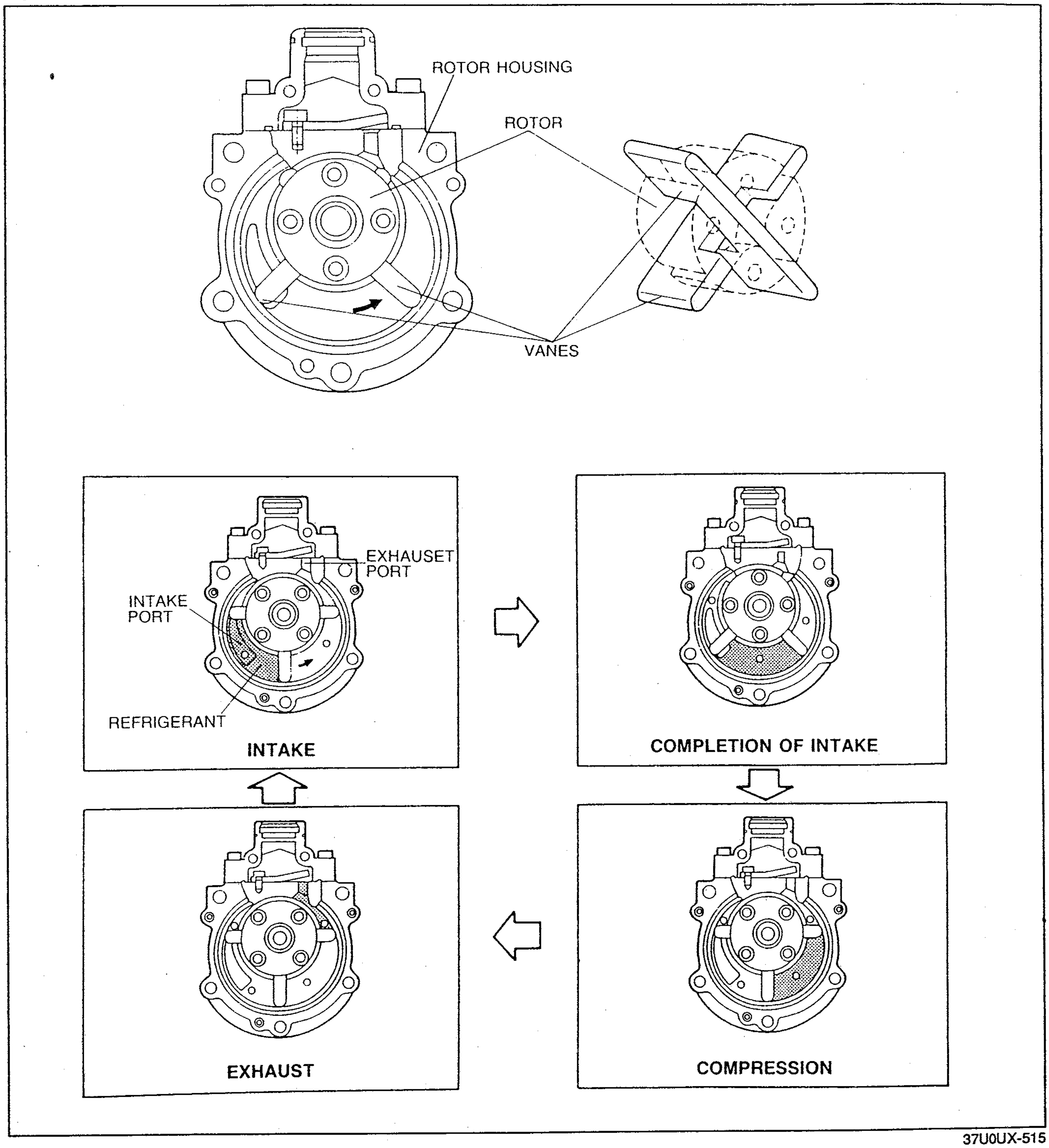

37U0UX-515

The compressor has a rotor and two through-vanes. As it rotates, it compresses the refrigerant as follows:

1. Intake
   The refrigerant is introduced into the rotor housing cavity through the intake port.
2. Completion of intake
   The chamber between vanes is filled with refrigerant, and the intake port is closed by the vane.
3. Compression
   As the rotor rotates, the area of the chamber becomes smaller, compressing the refrigerant.
4. Exhaust
   The compressed refrigerant is expelled through the exhaust port.

Lubrication

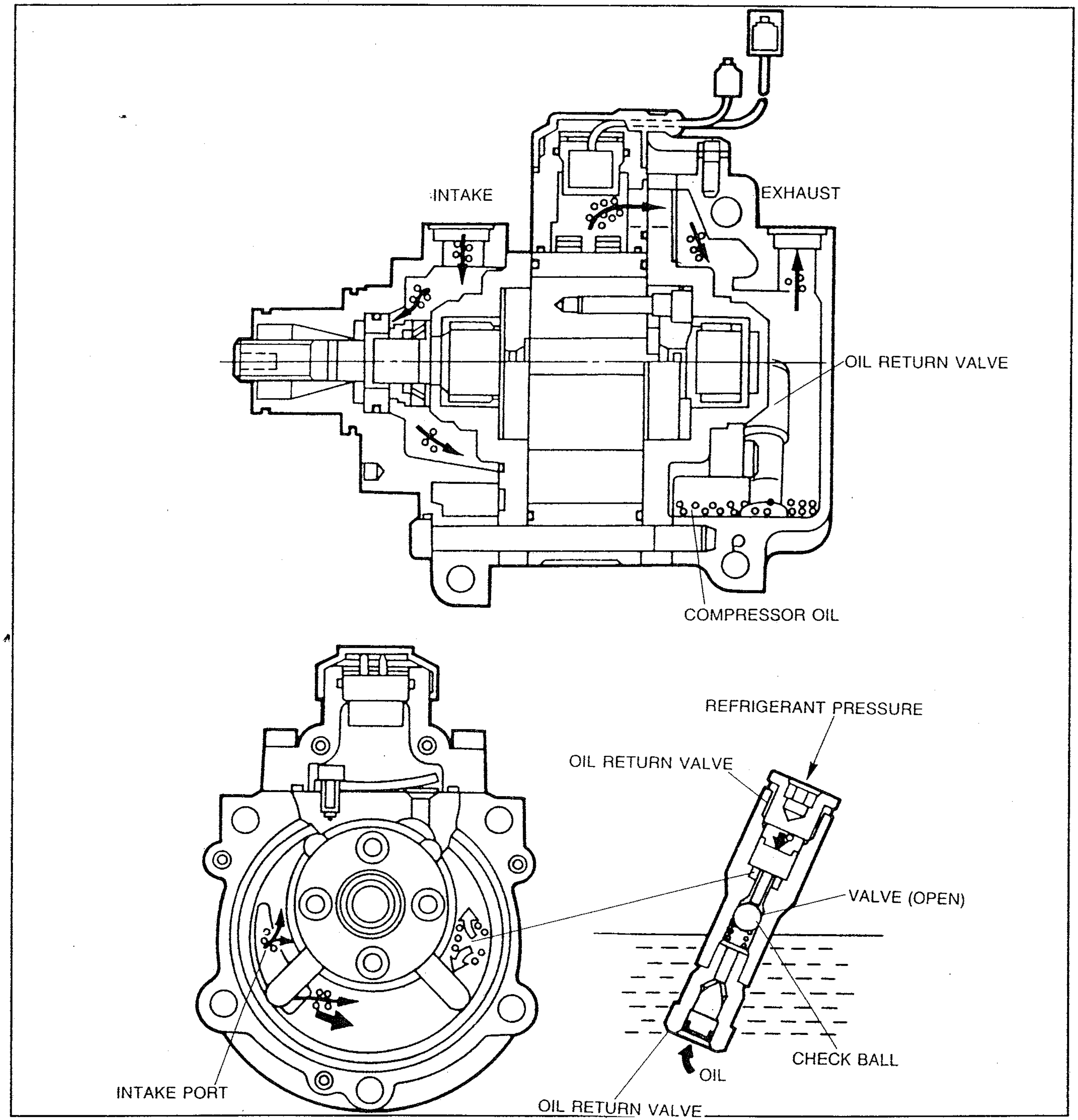

37U0UX-516

Intake period

The compressor oil enters the rotor housing through the intake port with the refrigerant, where it lubricates and seals the area between the rotor housing and the vanes.

Compression and exhaust period

The compressor oil is injected into the rotor housing through the oil return valve.

The oil return valve is installed in the lower rear (exhaust) section of the compressor, where the compressor oil collects. As the compressed refrigerant builds pressure, it opens the valve's check ball, and, because the refrigerant pressure also pressurizes the oil, oil is forced through the valve, into the compressor housing.

The oil does not close the ball because the surface area of the ball is less than that of the top of the valve.

Sludge and Heat Protection

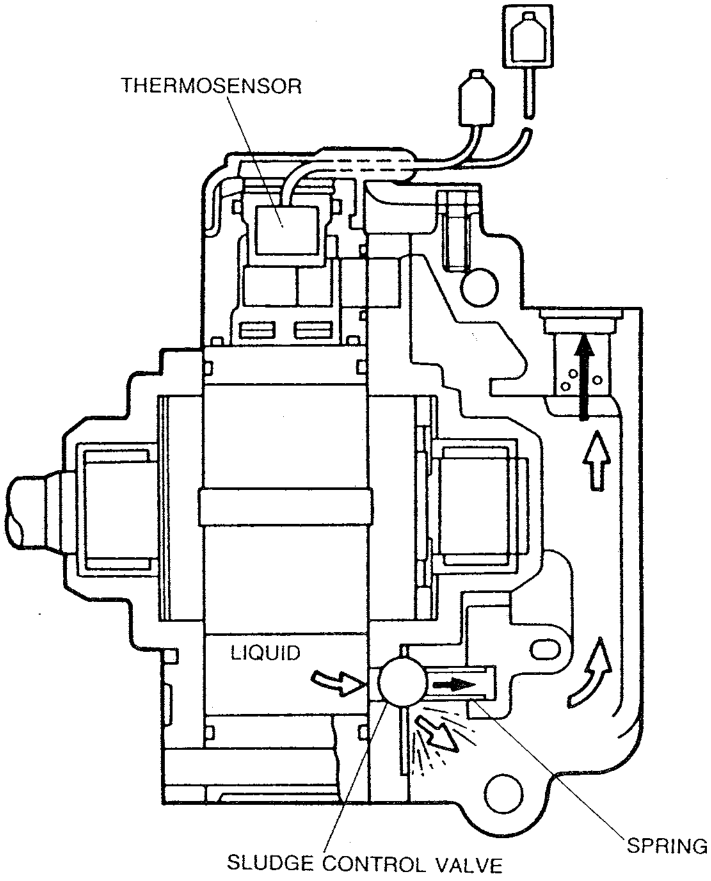

37U0UX-517

Sludge Protection

A sludge control valve is employed to prevent compression of liquid in the refrigerant.
If liquid enters the rotor housing along with the refrigerant and the refrigerant compression pressure increase abnormally, the sludge control valve opens and allows the liquid to escape. The liquid then flows to the receiver/drier with the refrigerant where it is removed.

Heat Protection

As the refrigerant is compressed it creates heat. To prevent overheating of the compressor, and possible damage, a thermosensor is fitted to the exhaust port to monitor the temperature. If the temperature exceeds 180 ± 5°C {356 ± 9°F}, the thermosensor opens the magnetic clutch circuit to stop compressor operation.
If the temperature again becomes less than 180 ± 5°C {356 ± 9°F}, the thermosensor closes the circuit, and the compressor again operates.

REFRIGERANT HOSE

A refrigerant hose lined with the nylon layer is adopted to reduce the aged refrigerant leakage.

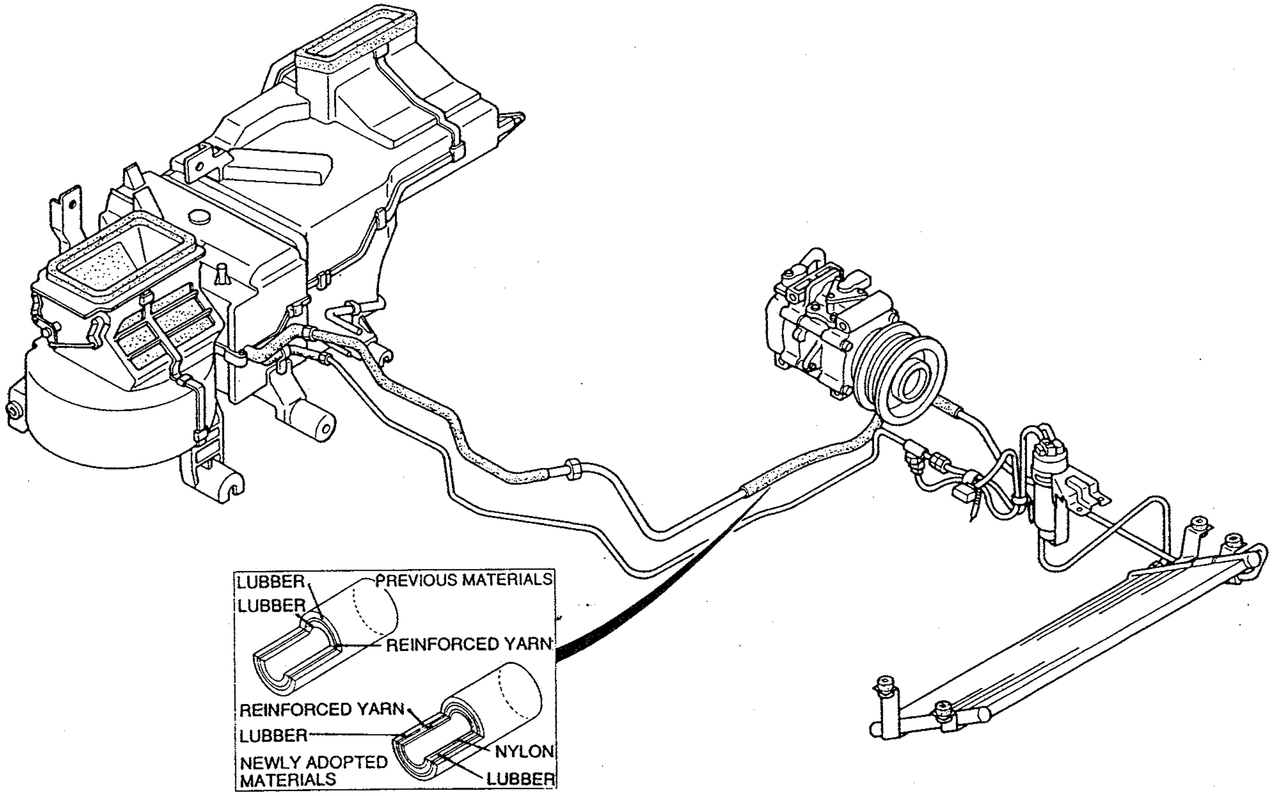

37U0UX-518

CONDENSER AND RECEIVER / DRIER

Condenser

The condenser cools the hot, highly pressurized gaseous refrigerant, compressed by the compressor, into liquid. A multi-flow type condenser is used to improve cooling effect.
The MANA receiver/drier functions identically as the Mazda-provided unit while the configuration is different.
The MANA condenser has the same capability as of the Nippon Denso condenser, though the bracket configuration is a little different.

Receiver / Drier

The receiver / drier temporarily stores the liquified refrigerant from the condenser, and cleans and dehumidifies the refrigerant.

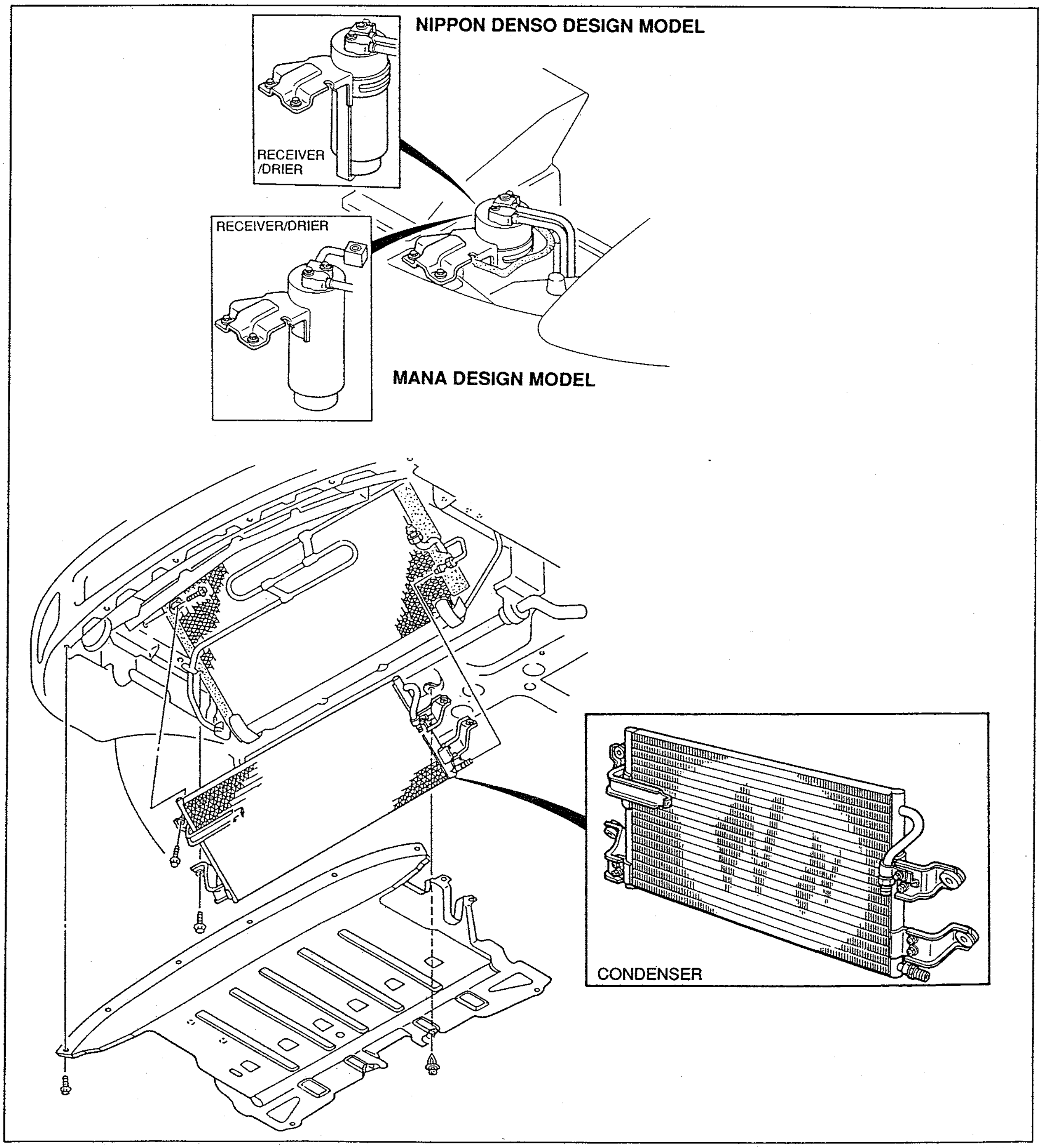

37U0UX-519

HEATER CONTROL UNIT

- A logic type heater control unit is employed.
  The unit controls actuation of the various actuators and doors to change the air output modes and the fresh air intake/recirculation mode operations.
- The A/C switch is incorporated in the unit for a more integrated lock.
- Indicators are provided to show selection of the air output mode, fresh air mode, recirculation mode, and air conditioner operation.

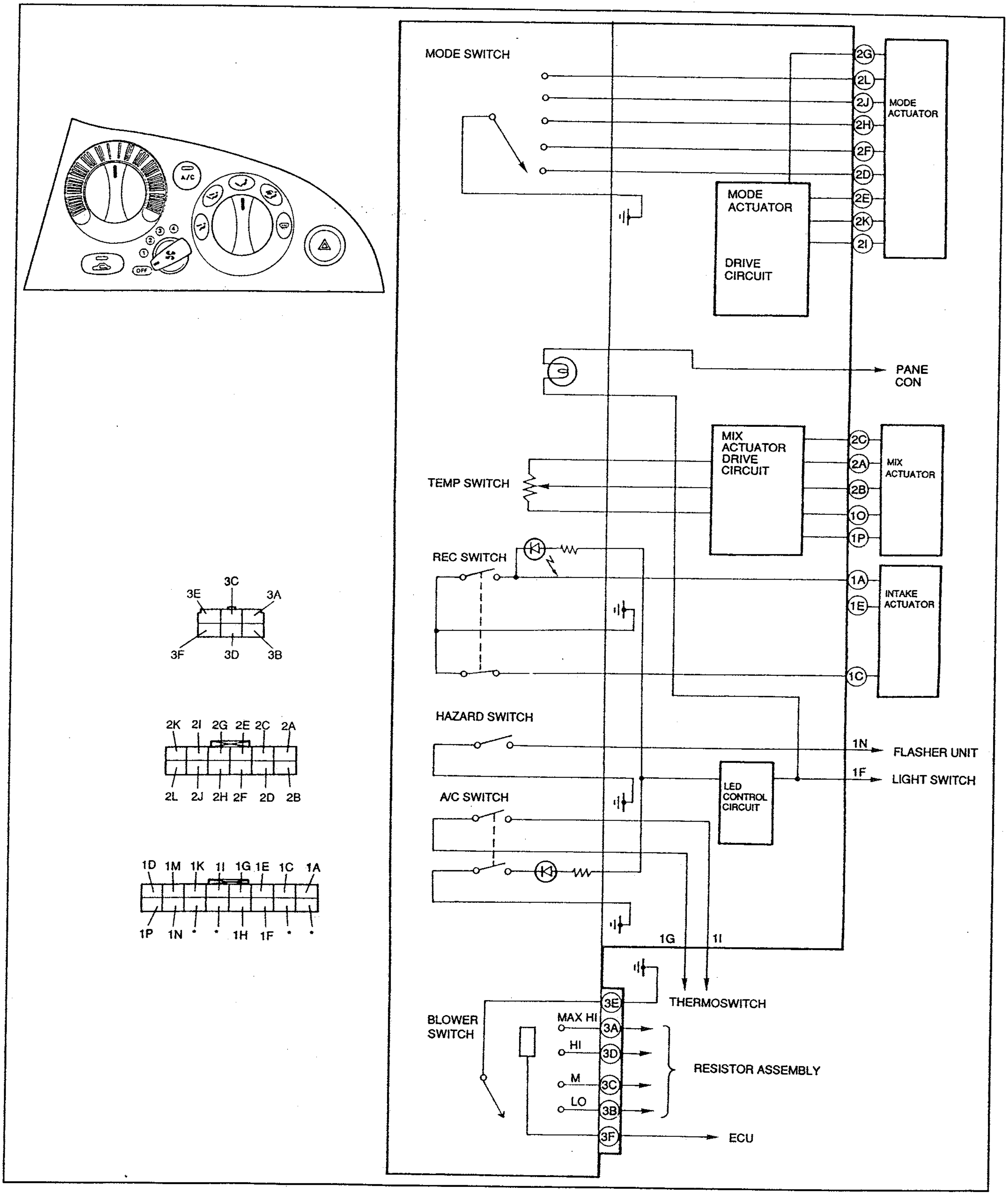

37U0UX-520

1991 Mazda Motor Corporation
Printed in Japan ⓪
3205-10-91I

Part No. 9999-95-045F-93