STEERING GEAR AND LINKAGE REMOVAL/INSTALLATION (ENGINE SPEED SENSING POWER STEERING)

A5U061232960W01

Caution

- **Performing the following procedures without first removing the ABS wheel-speed sensor may possibly cause an open circuit in the harness if it is pulled by mistake. Before performing the following procedures, remove the ABS wheel-speed sensor (axle side) and fix it to an appropriate place where the sensor will not be pulled by mistake while servicing the vehicle.**

1. Remove in the order indicated in the table.
2. Install in the reverse order of removal.
3. After installation, inspect the toe-in. (See 02–11–1 FRONT WHEEL ALIGNMENT.)

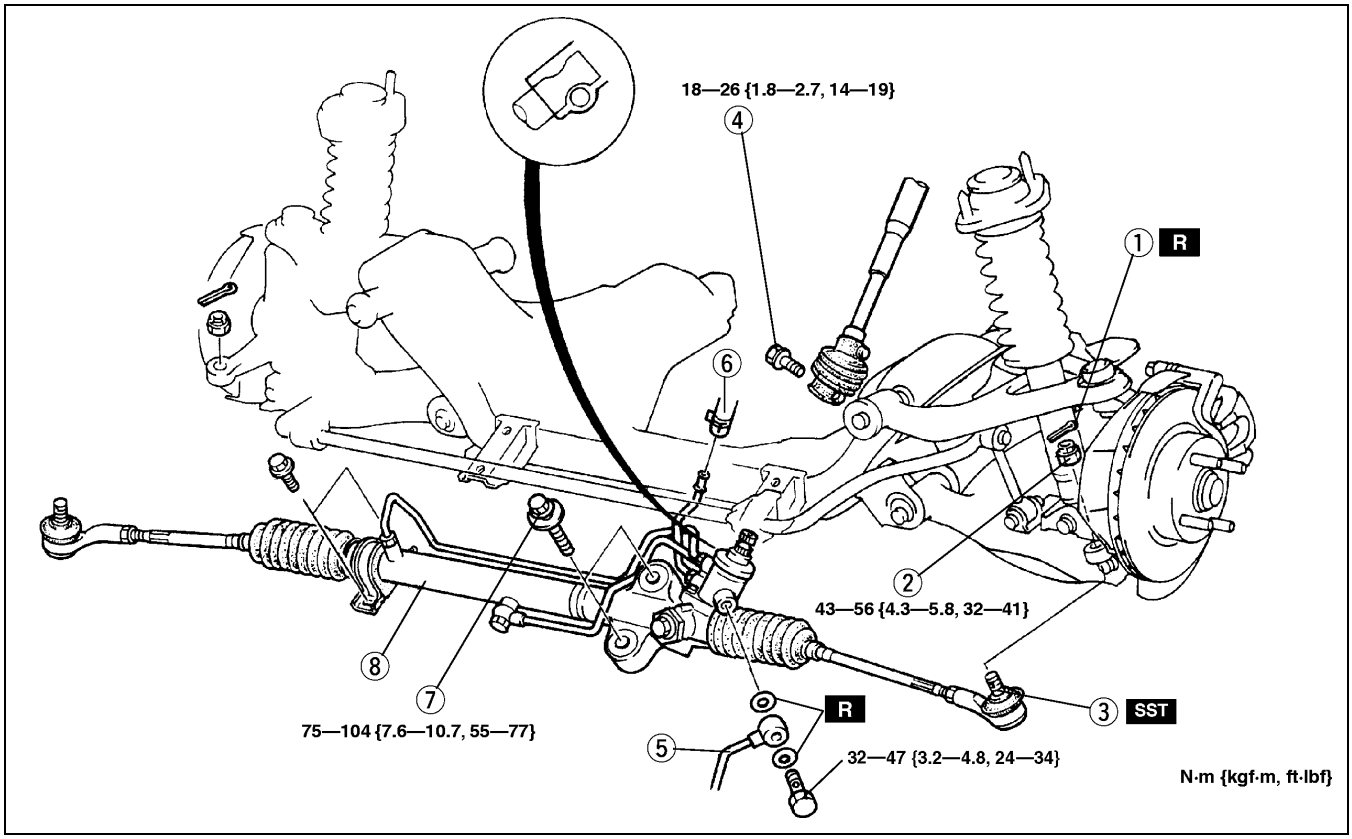

Z5U0612W111

1	Cotter pin
2	Nut
3	Tie-rod end ball joint (See 06–12–7 Tie-rod End Ball Joint Removal Note)
4	Bolt

5	Pressure pipe
6	Return hose
7	Mounting bracket bolt
8	Steering gear and linkage

Tie-rod End Ball Joint Removal Note

1. Separate the tie-rod end ball joint from the knuckle using the **SST**.

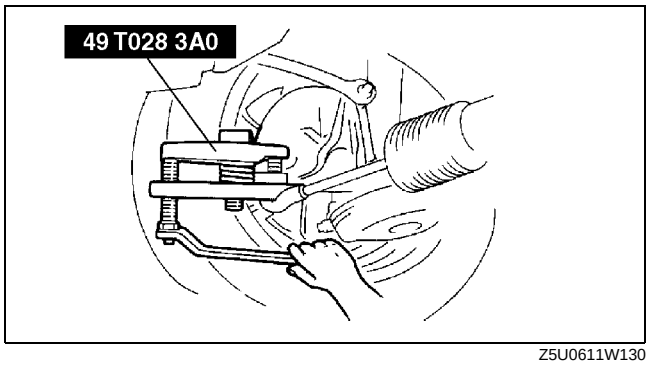

Z5U0611W130