Parts Catalog

Mazda RX-7
U.S.A.
('94)

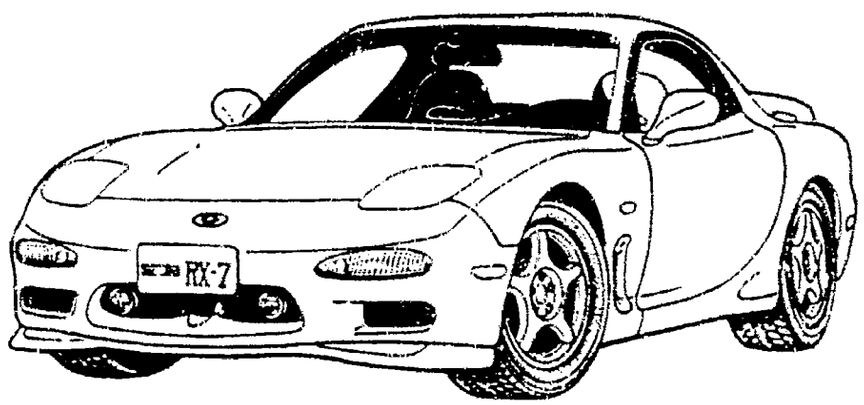

FD333 • -300001~310000

Apr.'95 (FINAL)

Catalog No. AU-FA05-03

mazda

© 1995 Mazda Motor Corporation

LAYOUT OF CONTENTS / DISPOSITION TYPOGRAPHIQUE DE CONTENU / DISPOSICION DEL CONTENIDO / ANORDNUNG DES INHALTS

- The following is a typical example of the layout of contents on Mazda microfiche parts catalog.
- Voici un exemple typique de la disposition typographique de contenu dans les microfiches de catalogue des pièces de Mazda.
- El siguiente es un ejemplo típico de la disposición del contenido en una microficha del catálogo de repuestos de Mazda.
- Folgendes ist ein typisches Beispiel der Inhaltsanordnung des Mazda-Mikrofiche-Teilekatalogs.

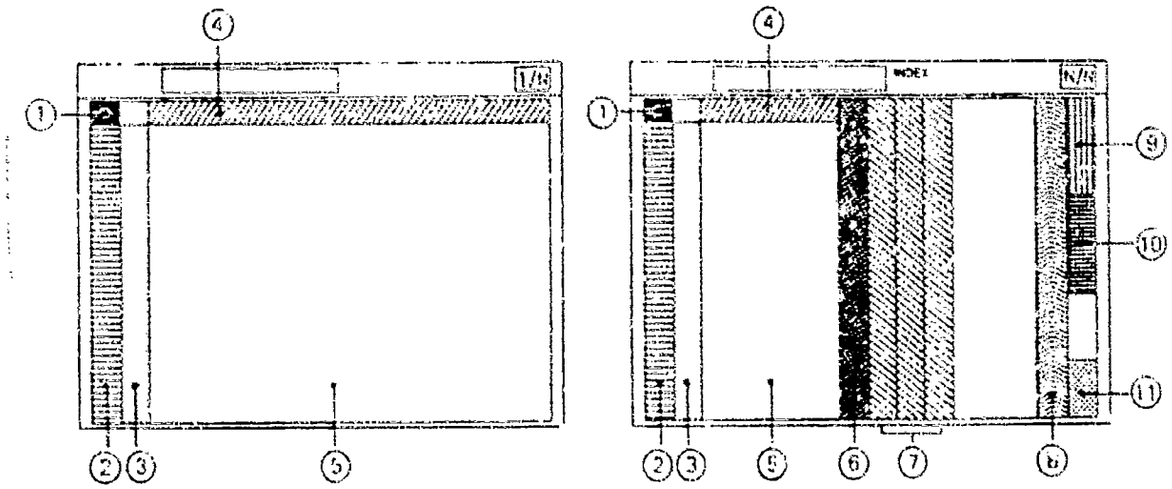

Remark : The items listed under ④ have been deleted from each fiche since Dec. '93

① • Layout of contents
• Disposition Typographique de Contenu
• Disposición del contenido
• Anordnung des Inhalts

② • Pictorial Index
• Index par Schémas
• Indice Gráfico
• Illustrierter Index

③ • Master Section No. Index
• Index des Numéros des Sections Totale
• Indice del Número de la Sección Maéstra
• Hauptabschnitssnummer-Index

~~④ • Section No. Index for the Column~~
~~• Index des Numéros des Sections pour les Colonnes~~
~~• N° de la Sección para el Indice~~
~~• Abschnitssnummer-Index für die Spalte~~

⑤ • Illustration & Text
• Illustrations et Textes
• Ilustración y Texto
• Abbildung und Text

⑥ • Part No. Index
• Index des Numéros des Pièces
• Indice del N° de Pieza
• Teile-Nr.-Index

⑦ • Alphabetical Index
• Index Alphabétique
• Indice Alfabético
• Alphabetischer Index

⑧ • Model Identification
• Identification des Modèles
• Identificación del Modelo
• Modell-Kennzeichnung

⑨ • Vehicle Identification System
• Système d'Identification de Véhicule
• Sistema de Identification de Vehiculo
• Fahrzeug-Identifikations-system

PICTORIAL INDEX

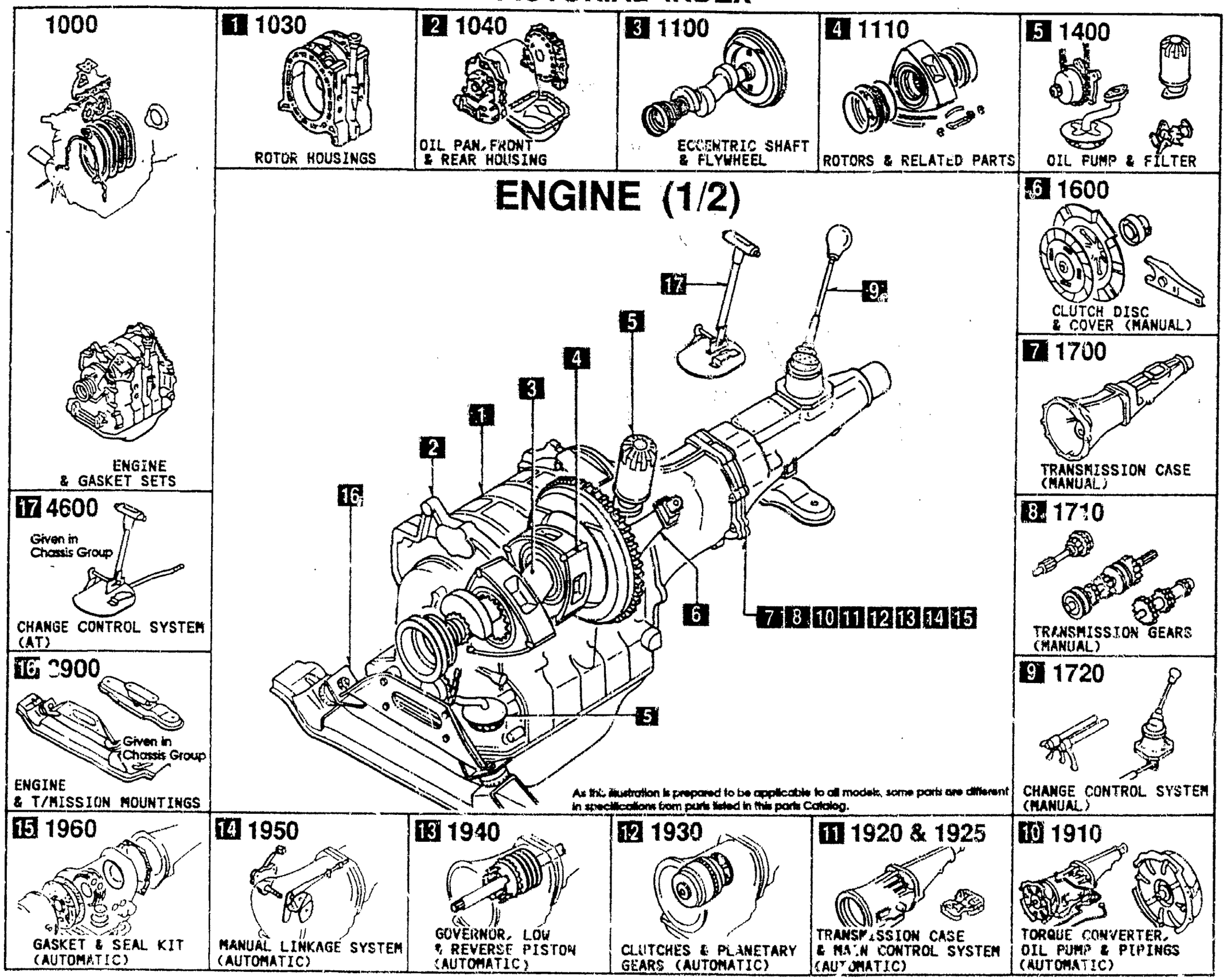

PICTORIAL INDEX

1 1300

INLET MANIFOLD

2 1310

EXHAUST MANIFOLD

3 1311

INTER COOLER

4 1312

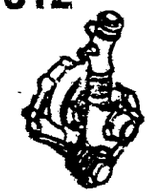

TURBO CHARGER

5 1320

FUEL SYSTEM

6 1325

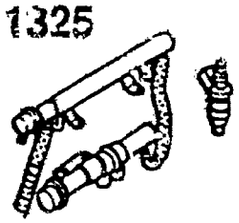

FUEL DISTRIBUTOR

ENGINE (2/2)

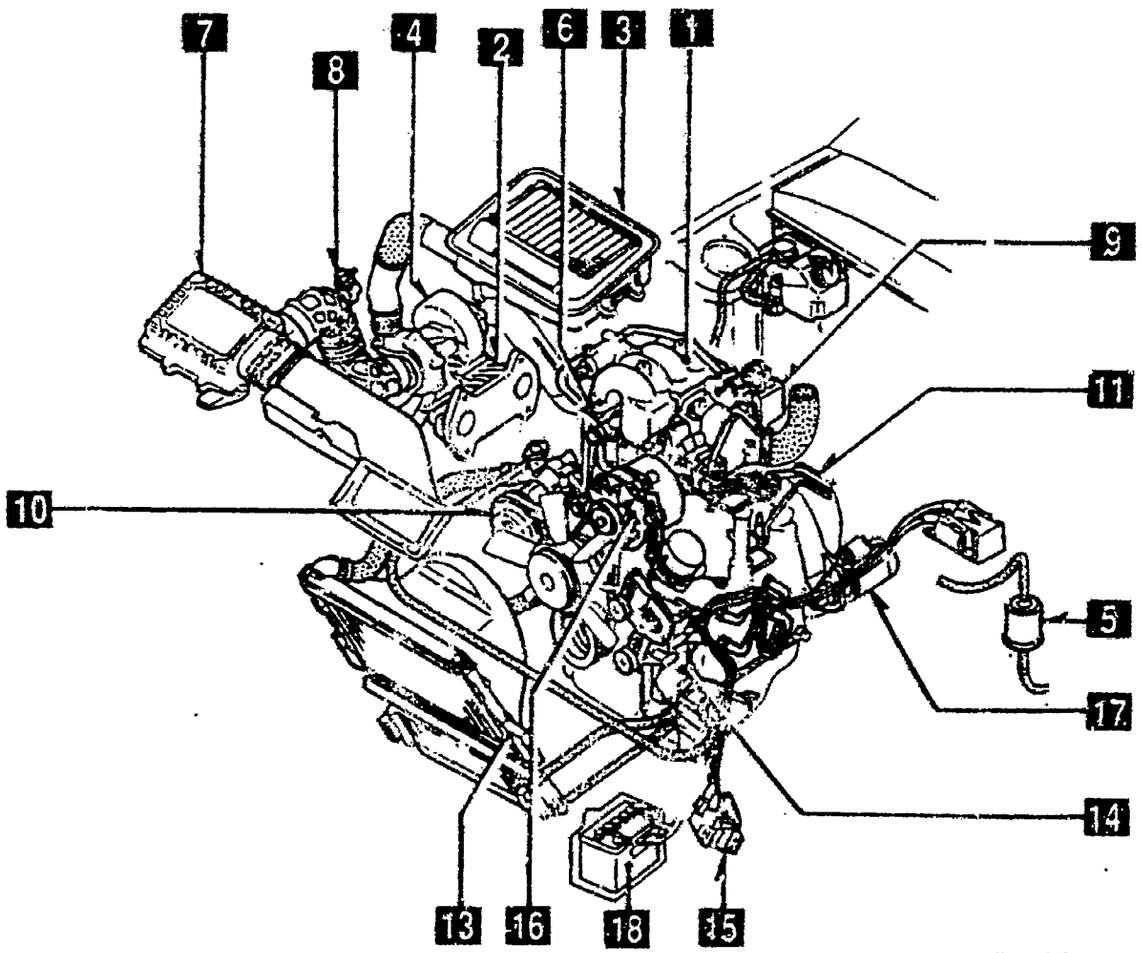

As this illustration is prepared to be applicable to all models, some parts are different in specifications from parts listed in this parts Catalog.

7 1330

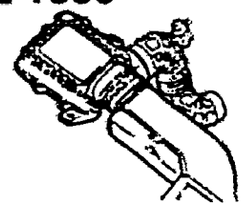

AIR CLEANER

8 1313

TWIN TURBO AIR INTAKE SYSTEM

9 1364

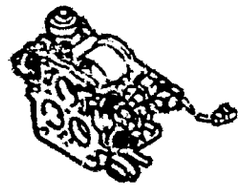

THROTTLE BODY

10 1371

AIR PUMP & AIR CONTROL VALVE

11 1380

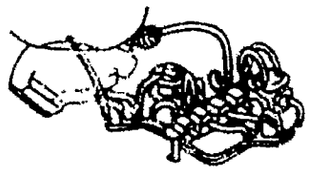

EMISSION CONTROL SYSTEM

12

13 1500

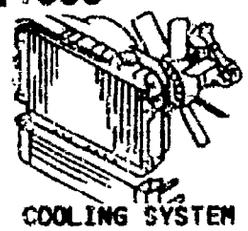

COOLING SYSTEM

14 1580

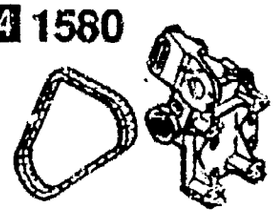

BRACKET, PULLEY & BELT

15 1800

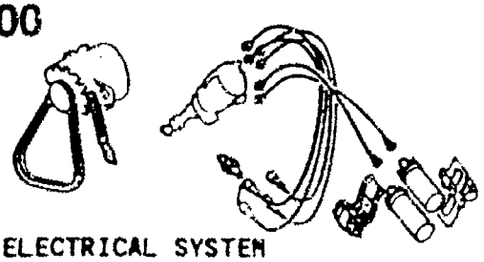

ENGINE ELECTRICAL SYSTEM

16 1830

ALTERNATOR

17 1840

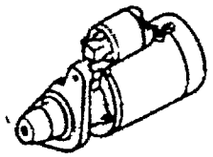

STARTER

18 1850

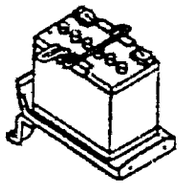

BATTERY

PICTORIAL INDEX

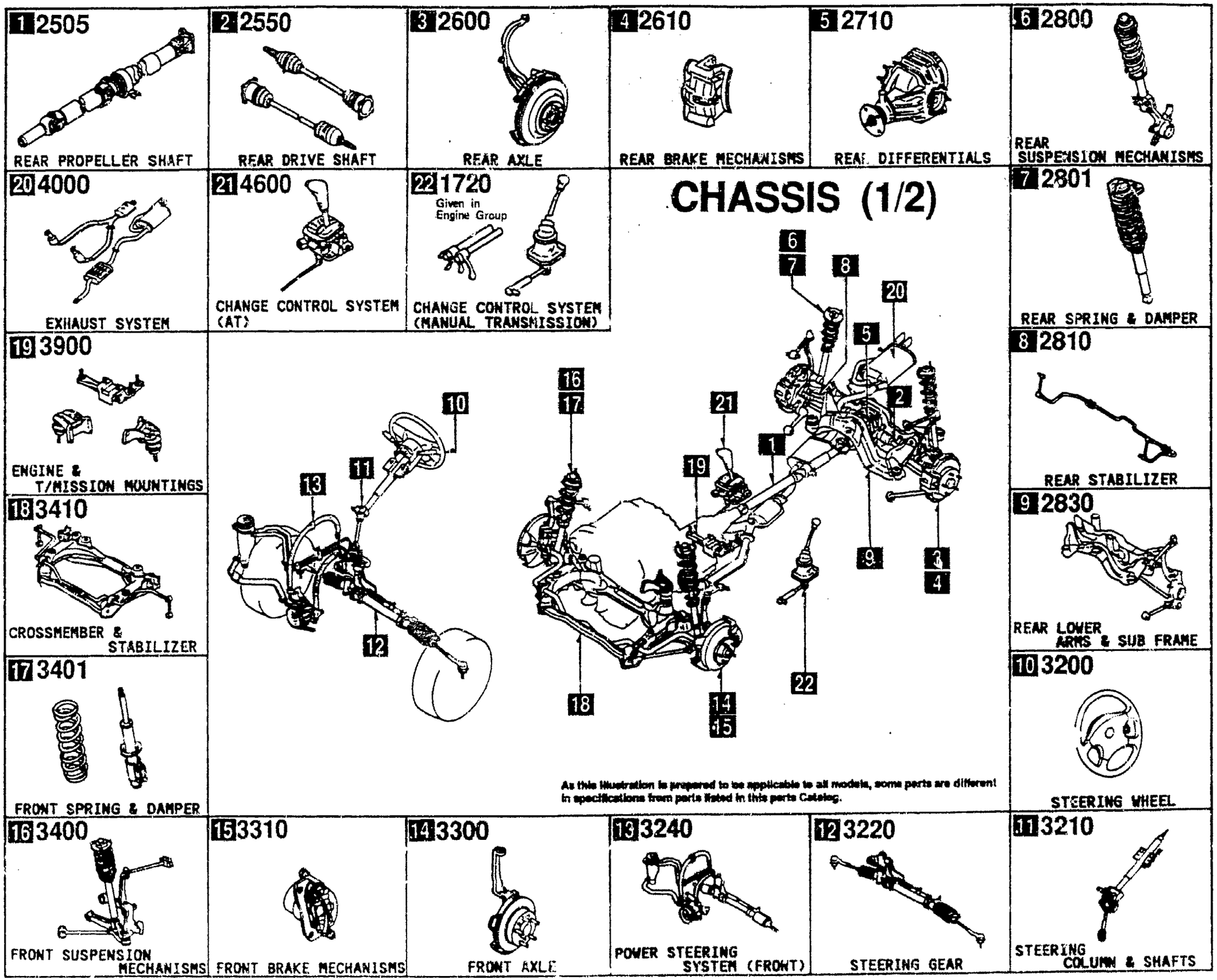

PICTORIAL INDEX

1 3700

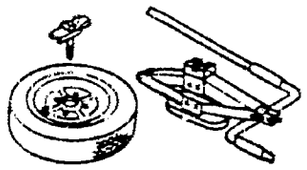

TIRES & JACK

2 4140

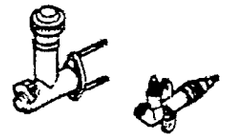

CLUTCH RELEASE & MASTER CYLINDERS

3 4145

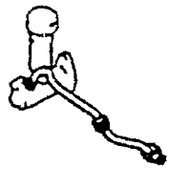

CLUTCH PIPINGS

4 4160

ACCELERATOR CONTROL SYSTEM

5 4200

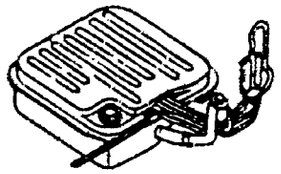

FUEL TANK

6 4210

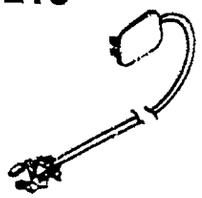

FUEL LID OPENER

CHASSIS (2/2)

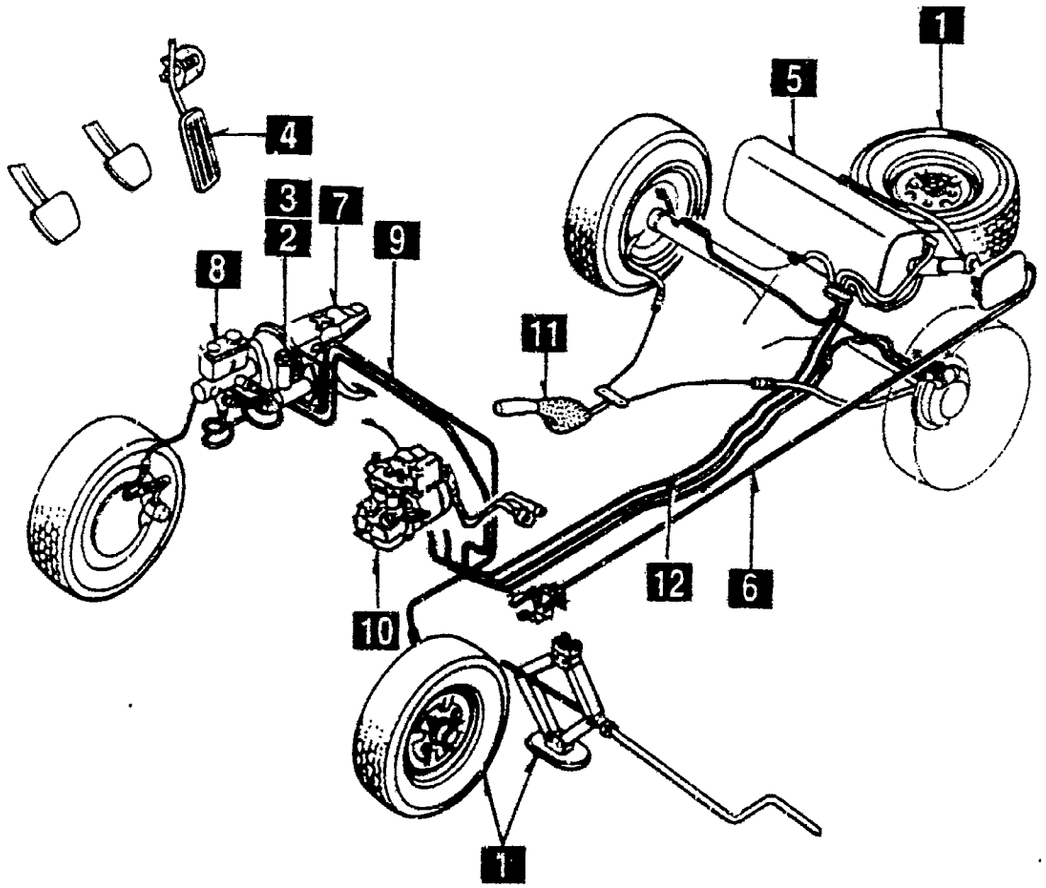

As this illustration is prepared to be applicable to all models, some parts are different in specifications from parts listed in this parts Catalog.

7 4300

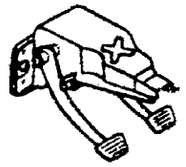

CLUTCH & BRAKE PEDALS

8 4340

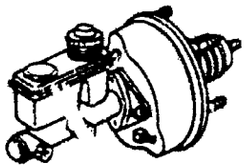

BRAKE MASTER CYLINDER & POWER BRAKE

9 4360

BRAKE PIPINGS

10 4370

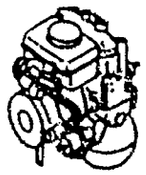

ANTILOCK BRAKE SYSTEM

12 4500

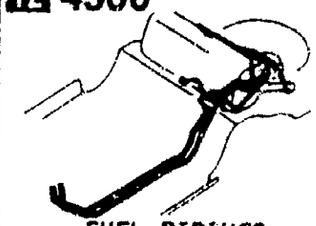

FUEL PIPINGS

11 4400

PARKING BRAKE SYSTEM

PICTORIAL INDEX

1 0900

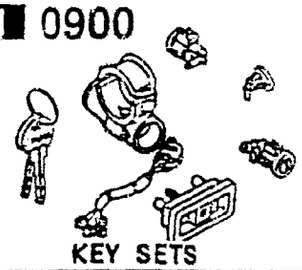

KEY SETS

2 5020

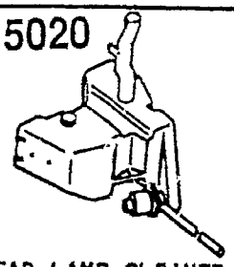

HEAD LAMP CLEANER

3 5100

HEAD LAMPS

4 5103

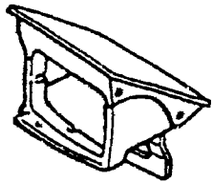

HEAD LAMP RETRACTORS

5 5105

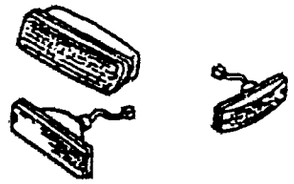

FRONT COMBINATION LAMPS

6 5110

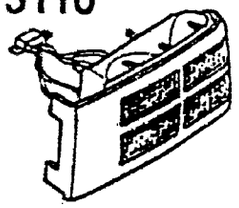

REAR COMBINATION LAMPS

19 6704

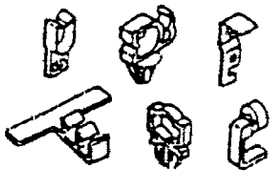

WIRING HARNESS CLAMPS

20 6720

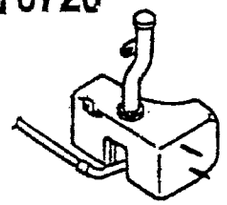

WINDSHIELD WASHER

21 6730

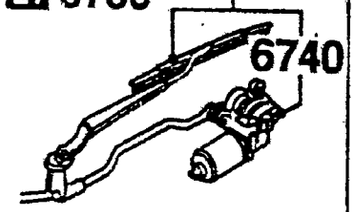

WINDSHIELD WIPERS

22 6750

WINDOW WIPER & WASHER (REAR)

7 5120

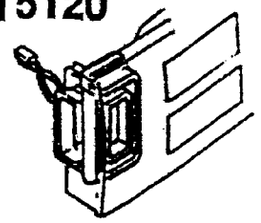

LICENSE LAMPS

18 6703

WIRING HARNESSES (DOOR, FLOOR/CEILING)

17 6702

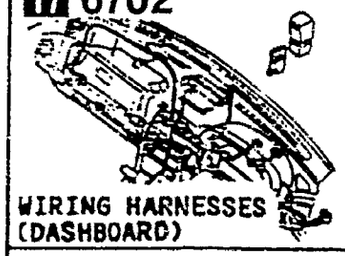

WIRING HARNESSES (DASHBOARD)

16 6700

WIRING HARNESSES (FRONT & REAR)

BODY (1/4)

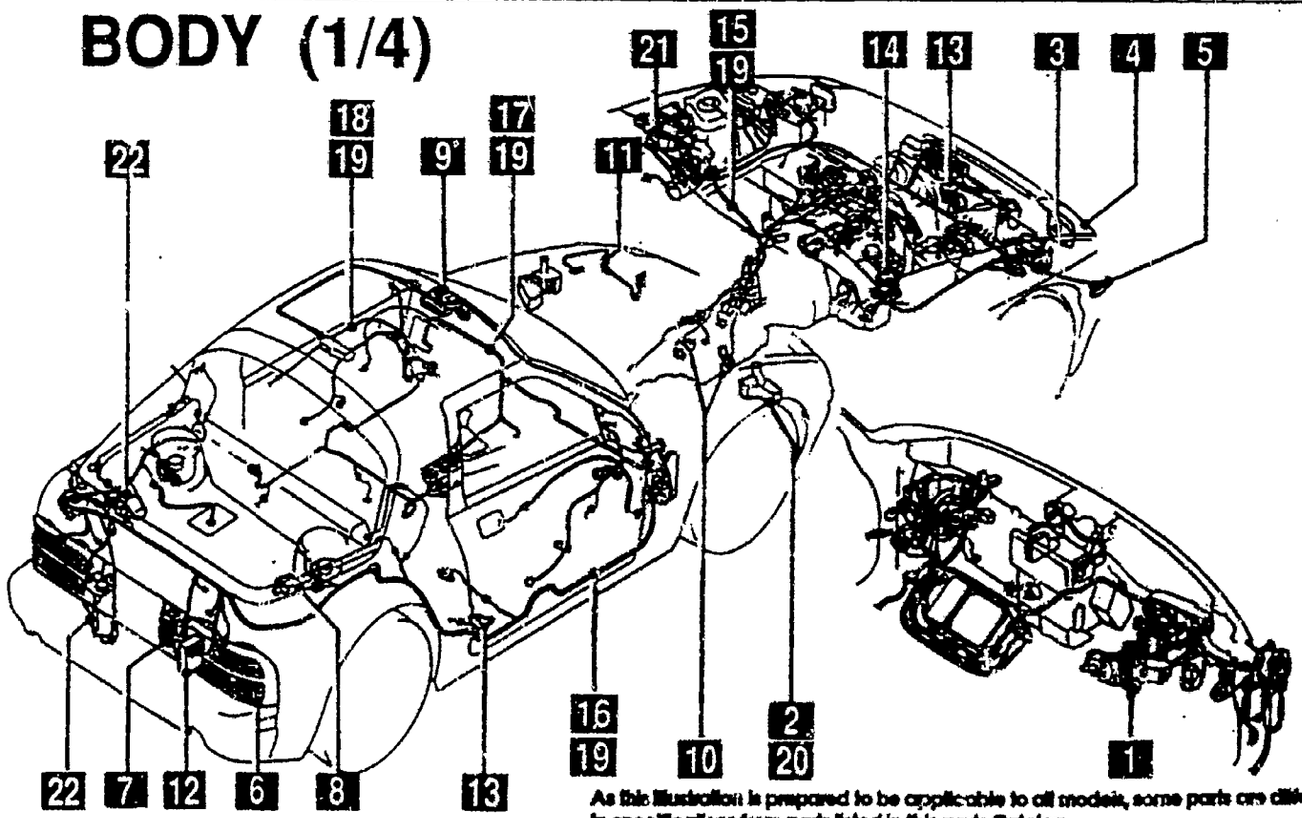

As this illustration is prepared to be applicable to all models, some parts are different in specifications from parts listed in this parts Catalog.

8 5125

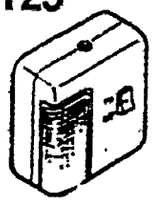

INTERIOR LAMPS

9 5130

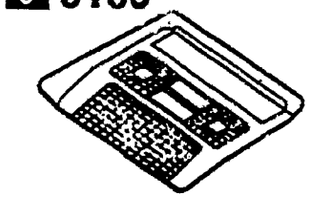

OVERHEAD CONSOLE

10 6600

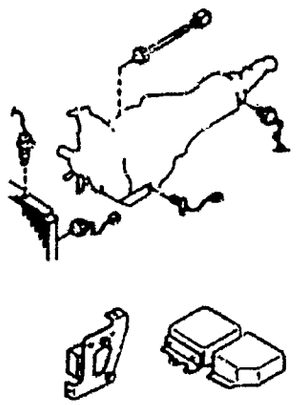

SWITCHES & RELAYS (ENGINE)

15 6701

WIRING HARNESSES (ENGINE & T/MISSION)

14 6640

AUTO CRUISE CONTROL SYSTEM

13 6635

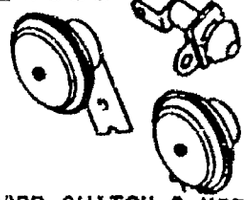

DOOR SWITCH & HORNS

12 6630

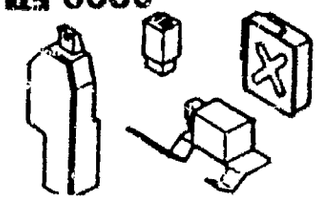

RELAYS & UNIT (BODY)

11 5795

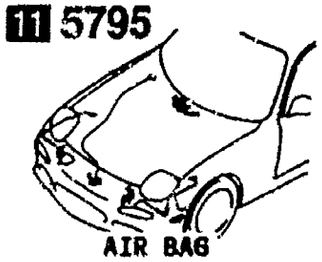

AIR BAG

PICTORIAL INDEX

1 5000

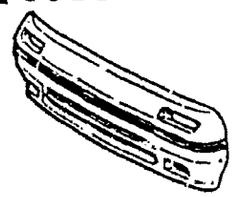

FRONT BUMPER

2 5010

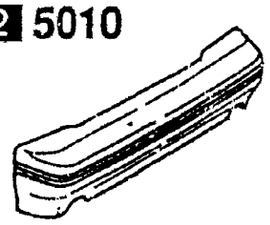

REAR BUMPER

3 5030

WINDOW MOULDINGS

4 5040

BODY MOULDINGS

5 5170

ORNAMENTS

6 5180

COWL
& EXTRACTOR GRILLES

20 6300

WINDOW GLASSES

21 6330

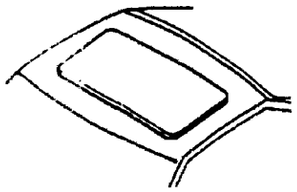

SUNROOF

22 7800

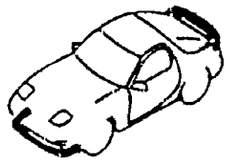

SPOILERS
& RELATED PARTS

BODY (2/4)

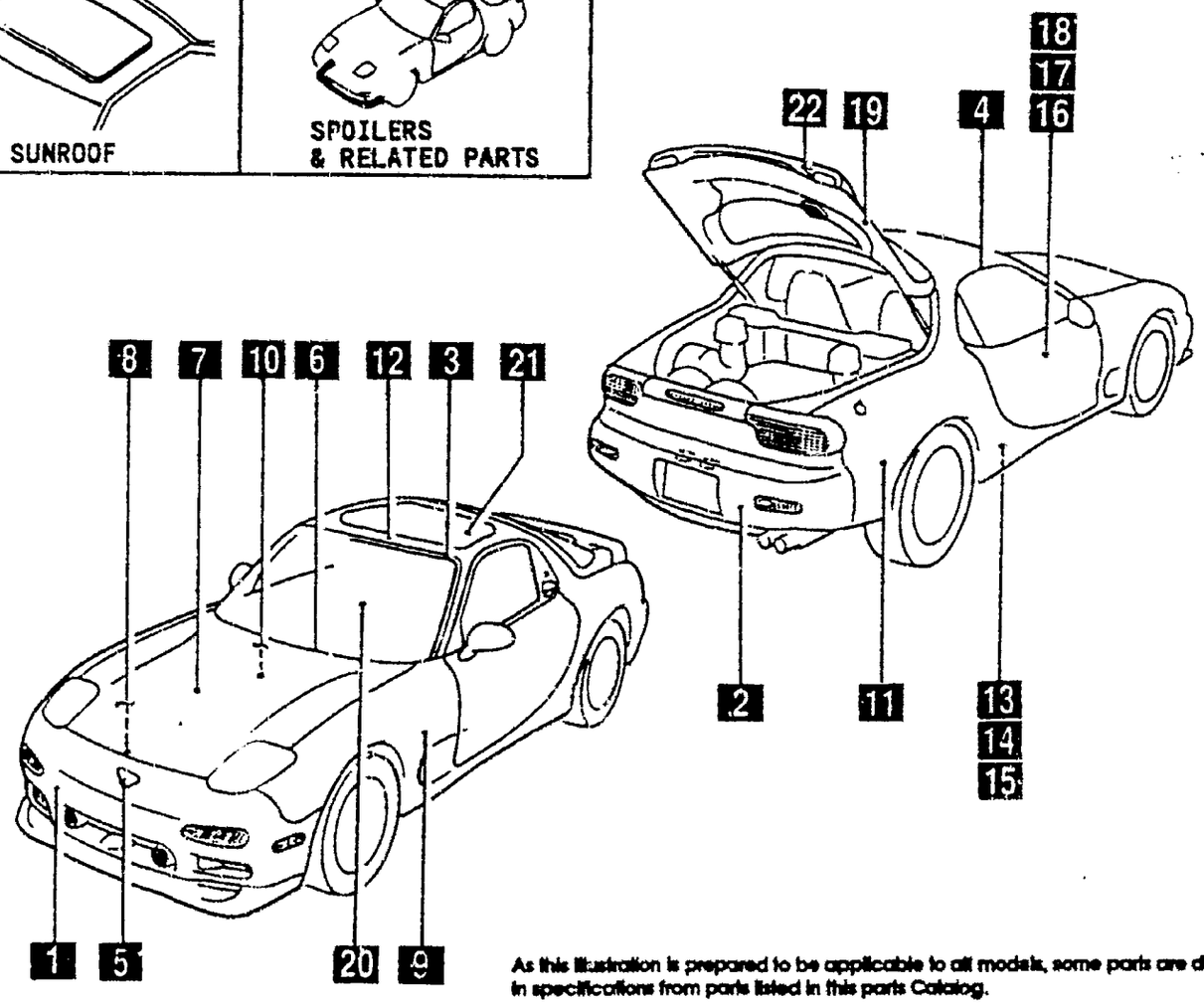

As this illustration is prepared to be applicable to all models, some parts are different in specifications from parts listed in this parts Catalog.

7 5230

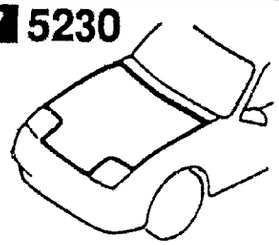

BONNET

19 6230

LIFT GATE MECHANISMS

8 5310

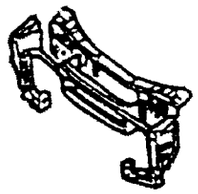

FRONT PANELS

18 5840

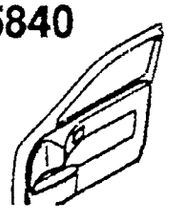

FRONT DOOR TRIMS
& RELATED PARTS

9 5320

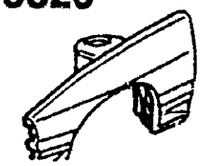

FENDER & WHEEL APRON
PANELS

17 5830

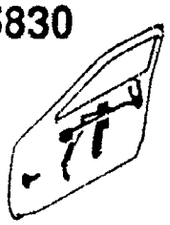

FRONT DOOR MECHANISMS

10 5330

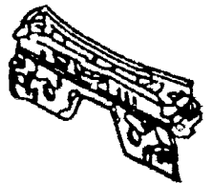

DASH & COWL PANELS

16 5800

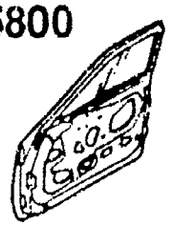

FRONT DOORS

15 5390

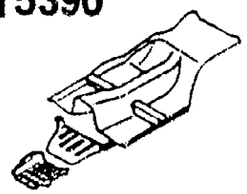

FLOOR ATTACHMENTS

14 5380

FLOOR ATTACHMENTS
(HOLE COVERS)

13 5370

FLOOR PANELS

12 5360

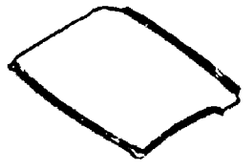

ROOF PANELS

11 5340

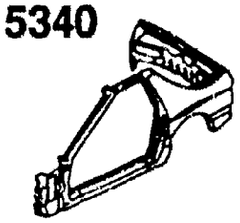

SIDE PANELS

PICTORIAL INDEX

1 5500

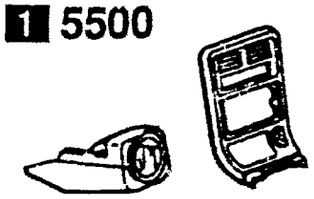

DASHBOARD EQUIPMENTS

2 5520

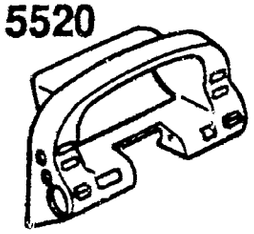

METER HOOD

3 5540

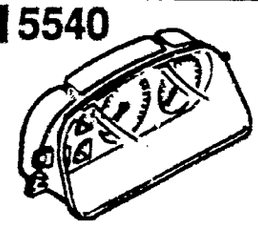

METER COMPONENTS

4 5560

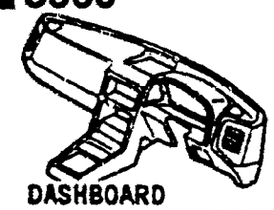

DASHBOARD & RELATED PARTS

5 5570

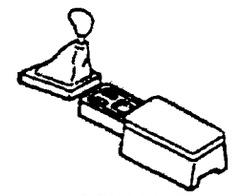

CONSOLE

6

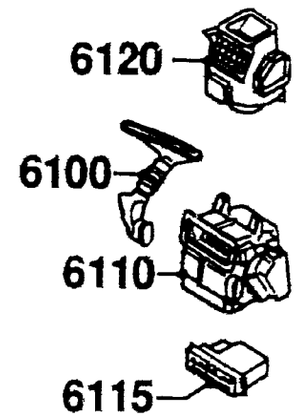

HEATER

BODY (3/4)

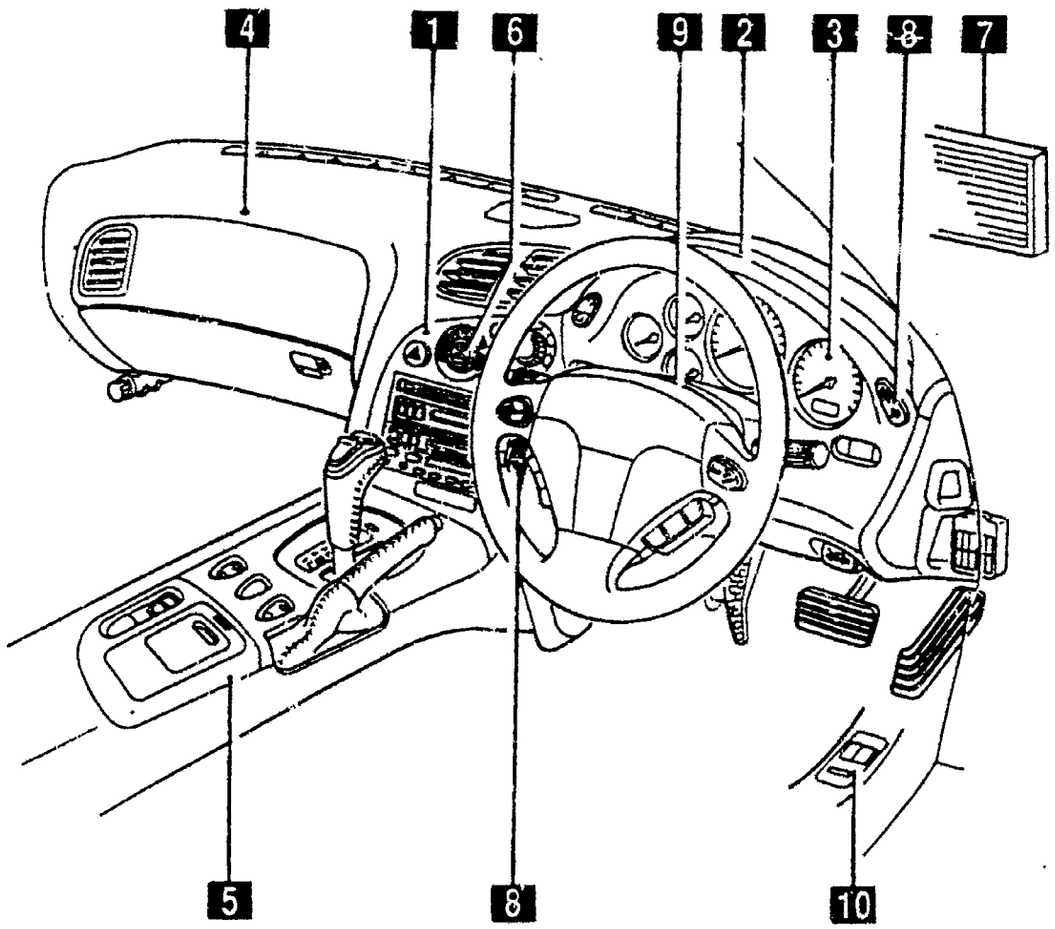

As this illustration is prepared to be applicable to all models, some parts are different in specifications from parts listed in this parts Catalog.

7

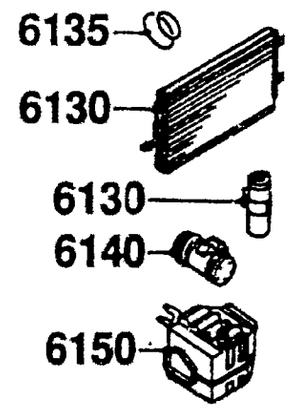

AIR CONDITIONER

8 6610

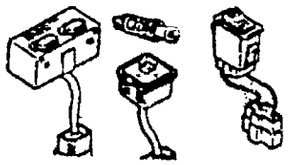

DASHBOARD SWITCHES

10 6615

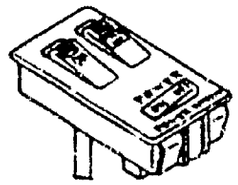

POWER WINDOW SWITCHES

9 6611

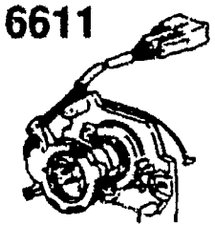

COMBINATION SWITCH

PICTORIAL INDEX

1 5580

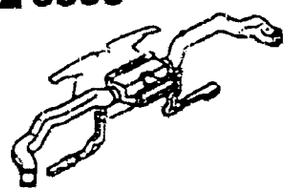

VENTILATOR

2 5700

FRONT SEATS

3 5750

REAR SEATS

4 5790

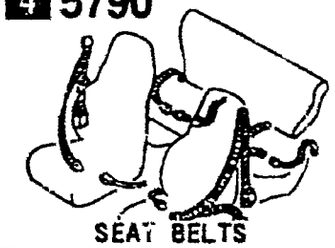

SEAT BELTS

5 6680

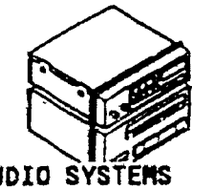

AUDIO SYSTEMS
(RADIO & TAPE DECK)

6 6682

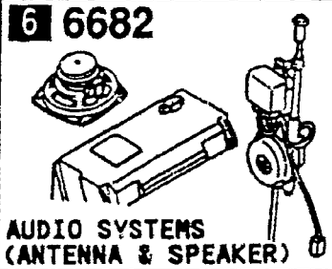

AUDIO SYSTEMS
(ANTENNA & SPEAKER)

BODY (4/4)

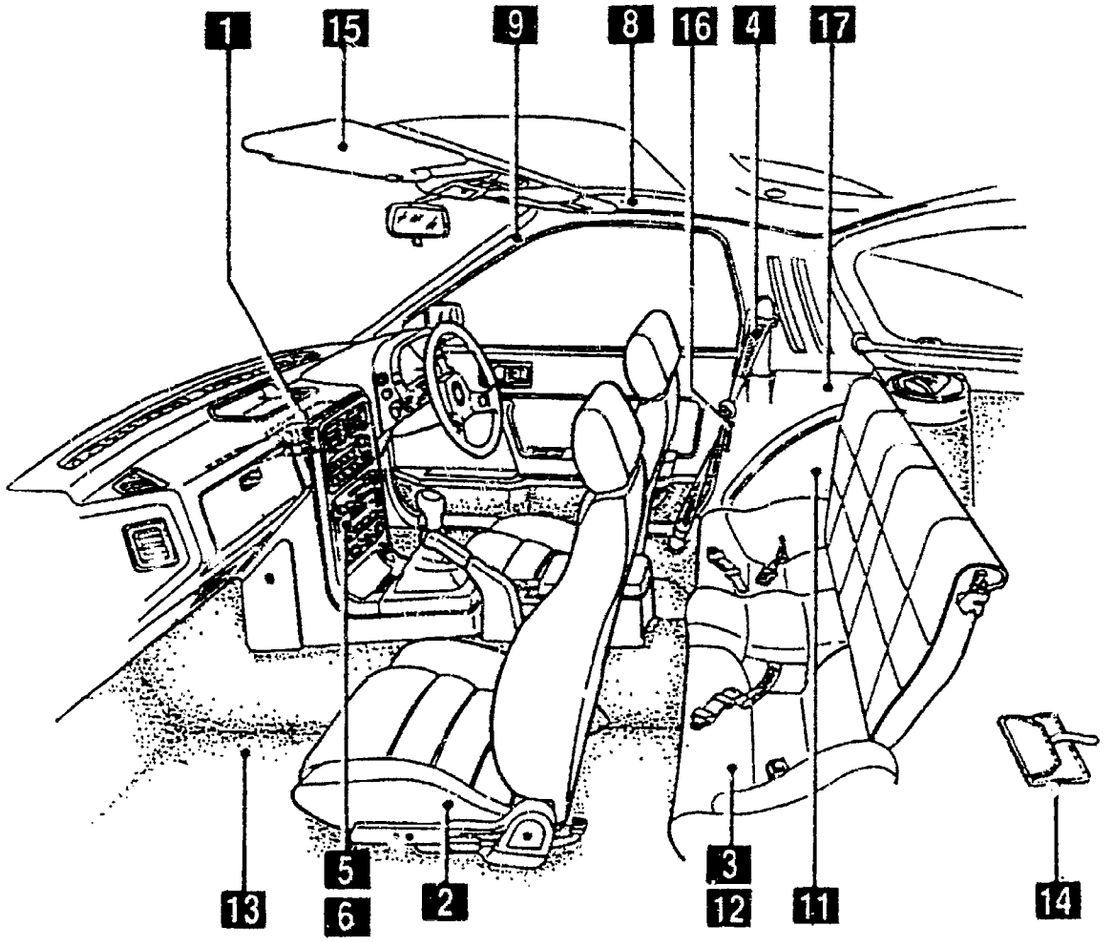

As this illustration is prepared to be applicable to all models, some parts are different in specifications from parts listed in this parts Catalog.

7

8 6800

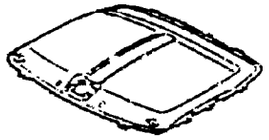

CEILING TRIMS

9 6820

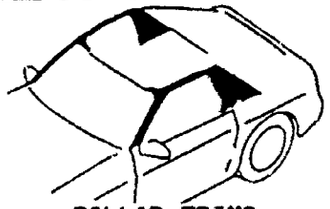

PILLAR TRIMS

10

17 7250

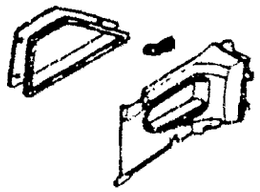

QUARTER WINDOW & TRIMS

16 6930

CAUTION PLATES
& LABELS

15 6900

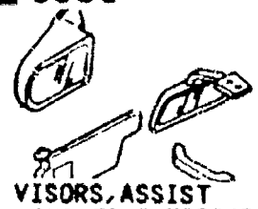

VISORS, ASSIST
HANDLES & MIRRORS

14 6870

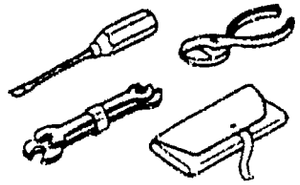

SERVICE TOOLS

13 6860

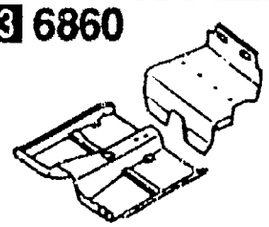

FLOOR MATS & PADS

12 6845

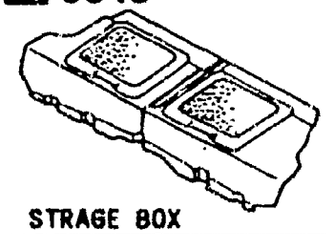

STRAGE BOX

11 6840

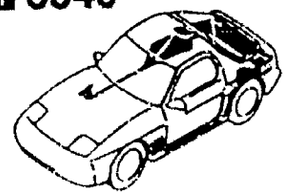

TRIMS & SCUFF PLATES

SECTION NAME INDEX (ENGINE)

LO.NO	SEC.NO	SECTION NAME	LO.NO	SEC.NO	SECTION NAME	LO.NO	SEC.NO	SECTION NAME
1-C03	1000	ENGINE & GASKET SETS	1-F11	1940	GOVERNOR, LOW & REVERSE PISTON (AUTOMATIC)			
1-D03	1030	ROTOR HOUSINGS	1-H11	1950	MANUAL LINKAGE SYSTEM (AUTOMATIC)			
1-G03	1040	OIL PAN,FRONT & REAR HOUSING						
1-J03	1100	ECCENTRIC SHAFT & FLYWHEEL	1-J11	1960	GASKET & SEAL KIT (AUTOMATIC)			
1-M03	1110	ROTORS & RELATED PARTS						
1-C04	1300	INLET MANIFOLD						
1-D04	1310	EXHAUST MANIFOLD						
1-E04	1311	INTER COOLER						
1-F04	1312	TURBO CHARGER						
1-H04	1313	TWIN TURBO AIR INTAKE SYSTEM						
1-J04	1320	FUEL SYSTEM						
1-K04	1325	FUEL DISTRIBUTOR						
1-M04	1330	AIR CLEANER						
1-C05	1364	THROTTLE BODY						
1-E05	1371	AIR PUMP & AIR CONTROL VALVE						
1-G05	1380	EMISSION CONTROL SYSTEM						
1-C06	1400	OIL PUMP & FILTER						
1-F06	1500	COOLING SYSTEM						
1-N06	1580	BRACKET,PULLEY & BELT						
1-C07	1600	CLUTCH DISC & COVER (MANUAL)						
1-E07	1700	TRANSMISSION CASE (MANUAL)						
1-I07	1710	TRANSMISSION GEARS(MANUAL)						
1-C08	1720	CHANGE CONTROL SYSTEM (MANUAL)						
1-E08	1800	ENGINE ELECTRICAL SYSTEM						
1-H08	1830	ALTERNATOR						
1-J08	1840	STARTER (MT)						
1-L08	1840 A	STARTER (AT)						
1-N08	1850	BATTERY						
1-C09	1910	TORQUE CONVERTER,OIL PUMP & PIPINGS (AUTOMATIC)						
1-H09	1920	TRANSMISSION CASE & MAIN CONTROL SYSTEM (AUTOMATIC)						
1-N09	1925	CONTROL VALVE (AUTOMATIC)						
1-J10	1930	CLUTCHES & PLANETARY GEARS (AUTOMATIC)						

SECTION NAME INDEX (CHASSIS)

LO.NO	SEC.NO	SECTION NAME	LO.NO	SEC.NO	SECTION NAME	LO.NO	SEC.NO	SECTION NAME
2-C03	2505	REAR PROPELLER SHAFT	2-E08	4600	CHANGE CONTROL SYSTEM (AT)			
2-D03	2550	REAR DRIVE SHAFT						
2-E03	2600	REAR AXLE						
2-G03	2610	REAR BRAKE MECHANISMS						
2-J03	2710	REAR DIFFERENTIALS						
2-N03	2800	REAR SUSPENSION MECHANISMS						
2-C04	2801	REAR SPRING & DAMPER						
2-D04	2810	REAR STABILIZER						
2-E04	2830	REAR LOWER ARMS & SUB FRAME						
2-H04	3200	STEERING WHEEL						
2-I04	3210	STEERING COLUMN & SHAFTS						
2-J04	3220	STEERING GEAR						
2-L04	3240	POWER STEERING SYSTEM						
2-M04	3300	FRONT AXLE						
2-N04	3310	FRONT BRAKE MECHANISMS						
2-C05	3400	FRONT SUSPENSION MECHANISMS						
2-E05	3401	FRONT SPRING & DAMPER						
2-F05	3410	CROSSMEMBER & STABILIZER						
2-G05	3700	TIRES & JACK						
2-C06	3900	ENGINE & T/MISSION MOUNTINGS						
2-D06	4000	EXHAUST SYSTEM						
2-G06	4140	CLUTCH RELEASE & MASTER CYLINDERS (MANUAL TRANSMISSION)						
2-I06	4145	CLUTCH PIPINGS (MANUAL TRANSMISSION)						
2-J06	4160	ACCELERATOR CONTROL SYSTEM						
2-K06	4200	FUEL TANK						
2-C07	4210	FUEL LID OPENER						
2-D07	4300	CLUTCH & BRAKE PEDALS (MANUAL TRANSMISSION)						
2-F07	4300A	BRAKE PEDALS (AUTOMATIC TRANSMISSION)						
2-G07	4340	BRAKE MASTER CYLINDER & POWER BRAKE						
2-I07	4360	BRAKE PIPINGS						
2-L07	4370	ANTILOCK BRAKE SYSTEM						
2-N07	4400	PARKING BRAKE SYSTEM						
2-C08	4500	FUEL PIPINGS						

SECTION NAME INDEX (BODY)

LO.NO	SEC.NO	SECTION NAME
2-C10	0900	KEY SETS
2-E10	5000	FRONT BUMPER
2-H10	5010	REAR BUMPER
2-J10	5020	HEAD LAMP CLEANER (SUN ROOF)
2-L10	5030	WINDOW MOULDINGS
2-M10	5040	BODY MOULDINGS
2-N10	5100	HEAD LAMPS
2-D11	5103	HEAD LAMP RETRACTORS
2-F11	5105	FRONT COMBINATION LAMPS
2-K11	5110	REAR COMBINATION LAMPS
2-D12	5120	LICENSE LAMPS
2-E12	5125	INTERIOR LAMPS
2-F12	5130	OVERHEAD CONSOLE
2-G12	5170	ORNAMENTS
2-H12	5180	COWL & EXTRACTOR GRILLES
2-J12	5230	BONNET
2-L12	5310	FRONT PANELS
2-M12	5320	FENDER & WHEEL APRON PANELS
2-D13	5330	DASH & COWL PANELS
2-E13	5340	SIDE PANELS
2-113	5360	ROOF PANELS (W/O SUN ROOF)
2-J13	5360 A	ROOF PANELS (SUN ROOF)
2-K13	5370	FLOOR PANELS
2-M13	5380	FLOOR ATTACHMENTS (HOLE COVERS)
2-C14	5390	FLOOR ATTACHMENTS
2-C15	5500	DASHBOARD EQUIPMENTS
2-D15	5520	METER HOOD
2-E15	5540	METER COMPONENTS
2-G15	5560	DASHBOARD & RELATED PARTS
2-K15	5570	CONSOLE
2-N15	5580	VENTILATOR
2-C16	5700	FRONT SEATS
2-M16	5790	SEAT BELTS

LO.NO	SEC.NO	SECTION NAME
3-C03	5795	AIR BAG
3-D03	5800	FRONT DOORS
3-G03	5830	FRONT DOOR MECHANISMS
3-J03	5840	FRONT DOOR TRIMS & RELATED PARTS
3-C04	6100	HEATER
3-D04	6110	HEATER UNIT COMPONENTS
3-E04	6115	HEATER CONTROLS COMPONENTS
3-F04	6120	HEATER BLOWER COMPONENTS
3-G04	6130	AIR CONDITIONER (DENSO MAKE)
3-J04	6130A	AIR CONDITIONER (MANA MAKE)
3-M04	6135	O RING SET,PIPING
3-N04	6140	COMPRESSOR COMPONENTS (AIR CONDITIONER) (DENSO MAKE)
3-D05	6140A	COMPRESSOR COMPONENTS (AIR CONDITIONER) (MANA MAKE)
3-F05	6150	COOLING UNIT (AIR CONDITIONER) (DENSO MAKE)
3-G05	6150A	COOLING UNIT (AIR CONDITIONER) (MANA MAKE)
3-I05	6230	LIFT GATE MECHANISMS
3-L05	6300	WINDOW GLASSES
3-M05	6330	SUNROOF
3-F06	6600	SWITCHES & RELAYS (ENGINE)
3-J06	6610	DASHBOARD SWITCHES
3-K06	6611	COMBINATION SWITCH
3-L06	6615	POWER WINDOW SWITCHES
3-M06	6630	RELAYS & UNIT (BODY)
3-C07	6635	DOOR SWITCH & HORNS
3-D07	6640	AUTO CRUISE CONTROL SYSTEM
3-E07	6680	AUDIO SYSTEMS (RADIO & TAPE DECK)
3-G07	6682	AUDIO SYSTEMS (ANTENNA & SPEAKER)
3-K07	6700	WIRING HARNESSES(FRONT & REAR)
3-C08	6701	WIRING HARNESSES(ENGINE & T/MISSION)

LO.NO	SEC.NO	SECTION NAME
3-E08	6702	WIRING HARNESSES(DASHBOARD)
3-G08	6703	WIRING HARNESSES(DOOR,FLOOR/CEILING)
3-H08	6704	WIRING HARNESS CLAMPS
3-I08	6720	WINDSHIELD WASHER
3-K08	6730	WINDSHIELD WIPERS
3-M08	6740	WIPER MOTOR COMPONENTS(FRONT)
3-N08	6750	WINDOW WIPER & WASHER (REAR)
3-E09	6760	WINDOW WIPER MOTOR COMPONENTS (REAR)
3-F09	6800	CEILING TRIMS
3-G09	6820	PILLAR TRIMS
3-H09	6840	TRIMS & SCUFF PLATES
3-L09	6845	STRAGE BOX
3-M09	6860	FLOOR MATS & PADS
3-D10	6870	SERVICE TOOLS
3-E10	6900	VISORS,ASSIST HANDLES & MIRRORS
3-H10	6930	CAUTION PLATES & LABELS
3-J10	7230	QUARTER WINDOW & TRIMS
3-L10	7800	SPOILERS & RELATED PARTS

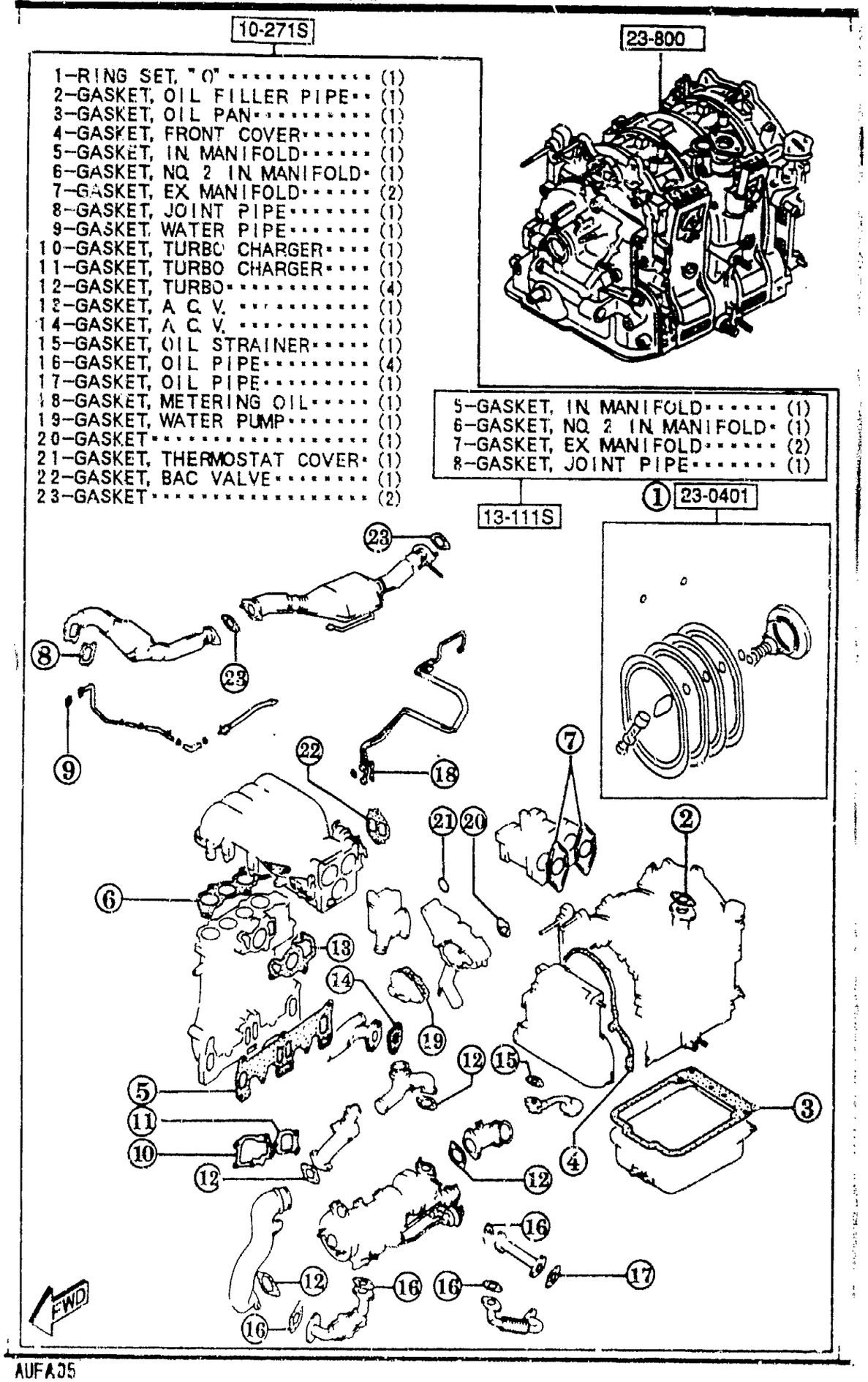

AUFA05

PART NO.	QTY	MODEL/RESTRICTION	MODEL/RESTRICTION	MODEL/RESTRICTION	FROM-TO
10-271S		GASKET SET,ENGINE			
8AFH-10-271	1				
13-111S		GASKET SET,SUB-ENG.			
8AF7-13-111	1				
23-0401		RING SET,'O'			
N3A1-10-S60	1				
23-800		ENGINE,SHORT			
N3A1-02-200	1	(MT)			
N3A2-02-200	1	(AT)			

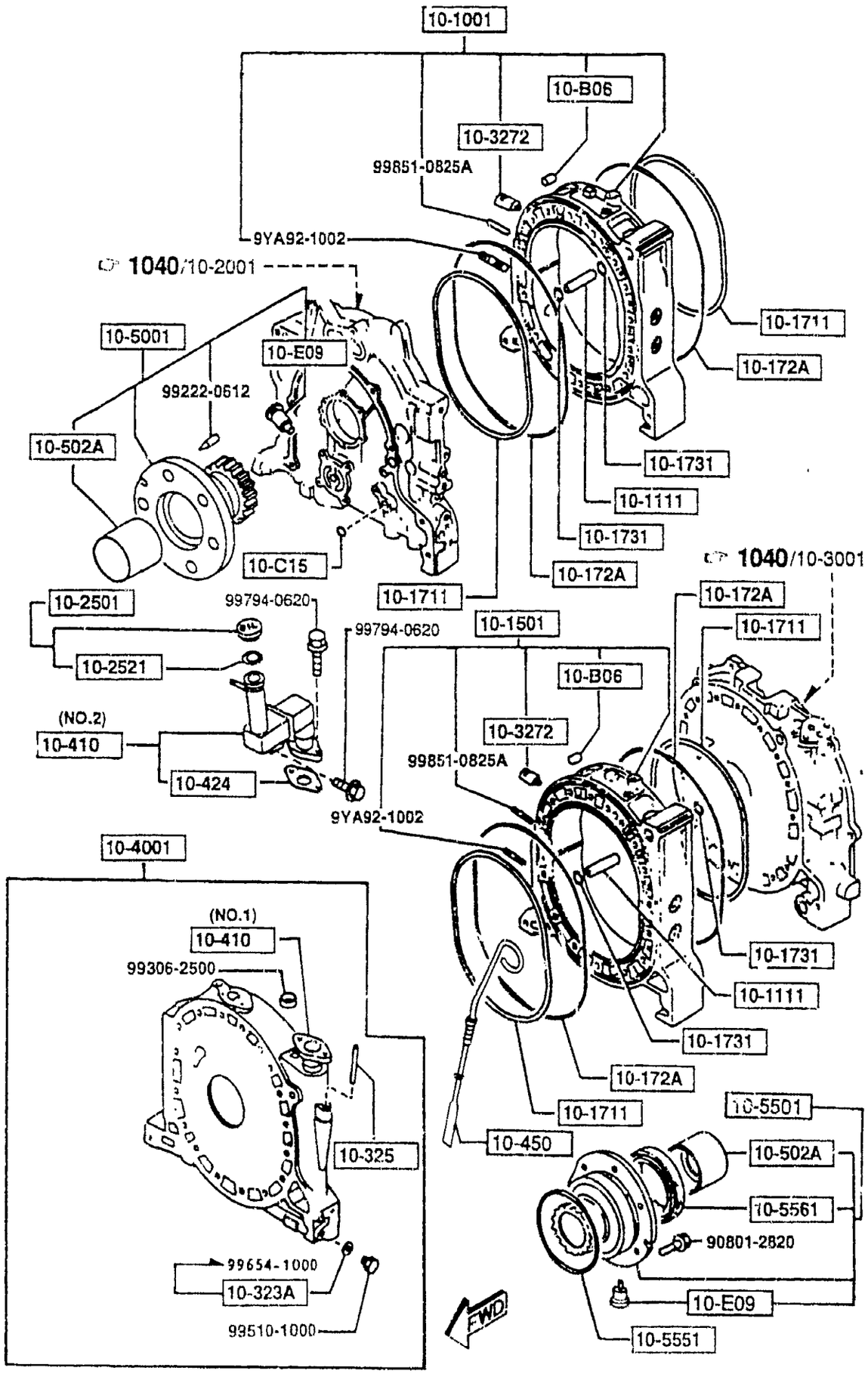

PART NO.	QTY	MODEL/RESTRICTION	MODEL/RESTRICTION	MODEL/RESTRICTION	FROM-TO
10-B06		PIN,SPRING			
N326-10-B06	4				
10-C15		RING,BACKUP			
N326-10-C15	1				
10-E09		PIN,STOPPER			
NF01-10-E09	2				
10-1001		HOUSING,ROTOR-FRONT			
N3A1-10-B10	1				
10-1111		DOWEL,TUBULAR			
1757-10-111	4				
10-1501		HOUSING,ROTOR-REAR			
N3A1-10-B50	1				
10-1711		RING,SQUARE			
N326-10-B71A	4				
10-172A		RING,SQUARE-OUTER			
N326-10-B72	4				
10-1731		RING,'O'			
N3A1-10-B73	4				
10-2501		CAP,OIL FILLER			
8871-10-250A	1				
10-2521		GASKET,OIL CAP			
8871-10-252	1				
10-323A		GASKET,WATER DRAIN-INTER.			
N326-10-323	1				-3A01
10-325		PIPE,OIL LEVEL GAUGE			
N318-10-441	1				
10-3272		PLUG,JET			
N326-14-633	2				

3A01 FD333*-300888

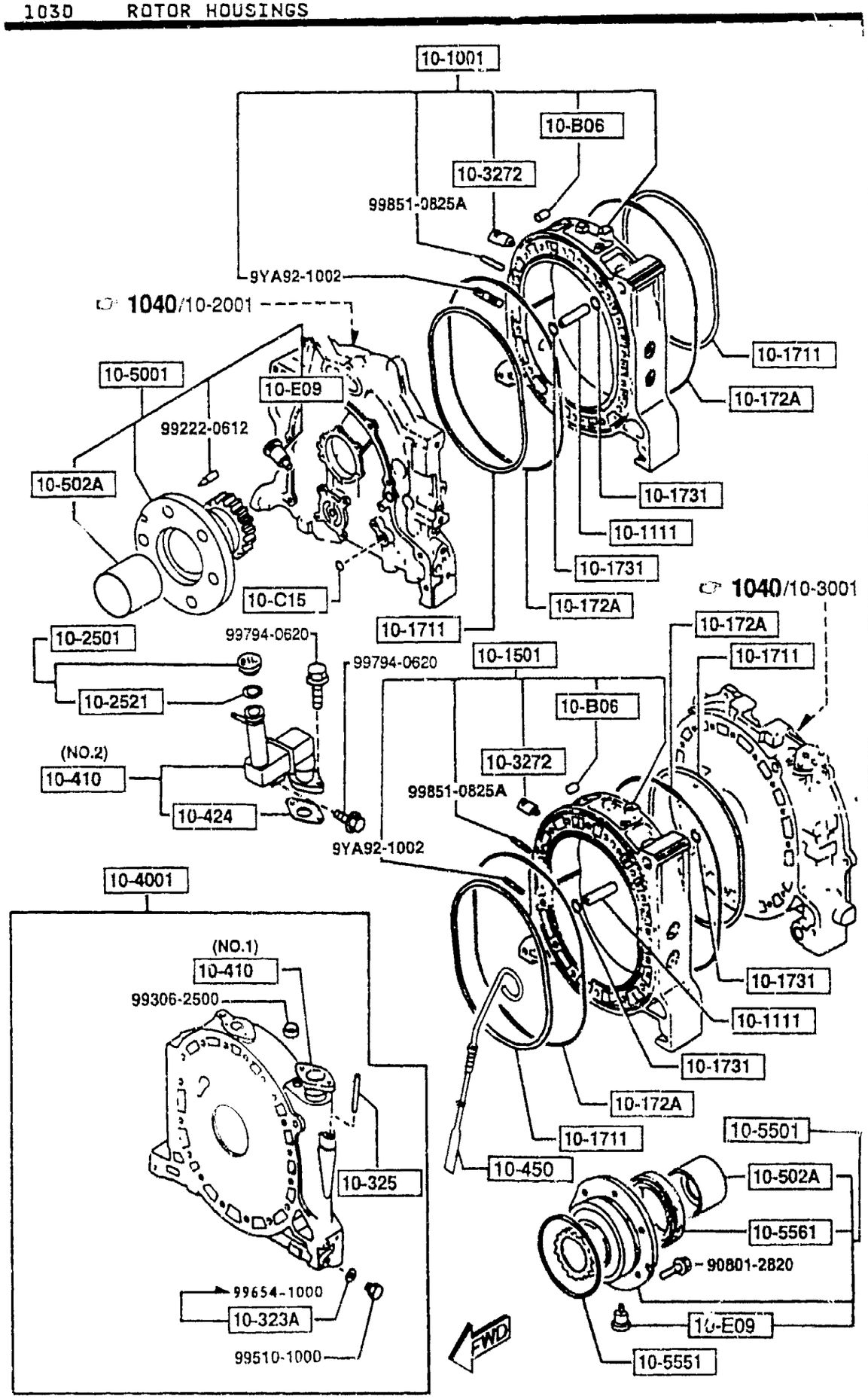

PART NO.	QTY	MODEL/RESTRICTION	MODEL/RESTRICTION	MODEL/RESTRICTION	FROM-TO
10-4001		HOUSING,INTERMEDIATE			
N3A1-10-D00	1				
10-410		PIPE,OIL FILLER			
N3A1-10-D10	1	(ILLUST. NO.1)			
N3A1-10-420B	1	(ILLUST. NO.2)			
10-424		GASKET,OIL FILLER PIPE			
N3A1-10-424A	1				
10-450		GAUGE,OIL LEVEL			
N3A1-10-450A	1				
10-5001		GEAR,STATIONARY-FRT.			
N3YA-10-E00A (N3YA-10-E00A)	1				-3A01
N3YA-10-E00A	1				3A01-3C01
N3A1-10-E0YB	1				3C01-
10-502A		METAL,STATIONARY GEAR			
NF01-10-E04	2	T=1.980MM YELLOW			
NF01-10-E05	2	T=1.983MM GREEN			
NF01-10-E06	2	T=1.986MM BROWN			
NF01-10-E07	2	T=1.989MM BLACK			
NF01-10-E08	2	T=1.992MM BLUE			
NF01-10-E22	2	T=1.988MM YELLOW			
NF01-10-E23	2	T=1.991MM GREEN			
NF01-10-E24	2	T=1.994MM BROWN			
NF01-10-E25	2	T=1.997MM BLACK			
NF01-10-E26	2	T=2.000MM BLUE			
10-5501		GEAR,STATIONARY-RR.			
N3YA-10-E10A	1				-3A01

3A01 FD333*-300888
3C01 FD333*-301464

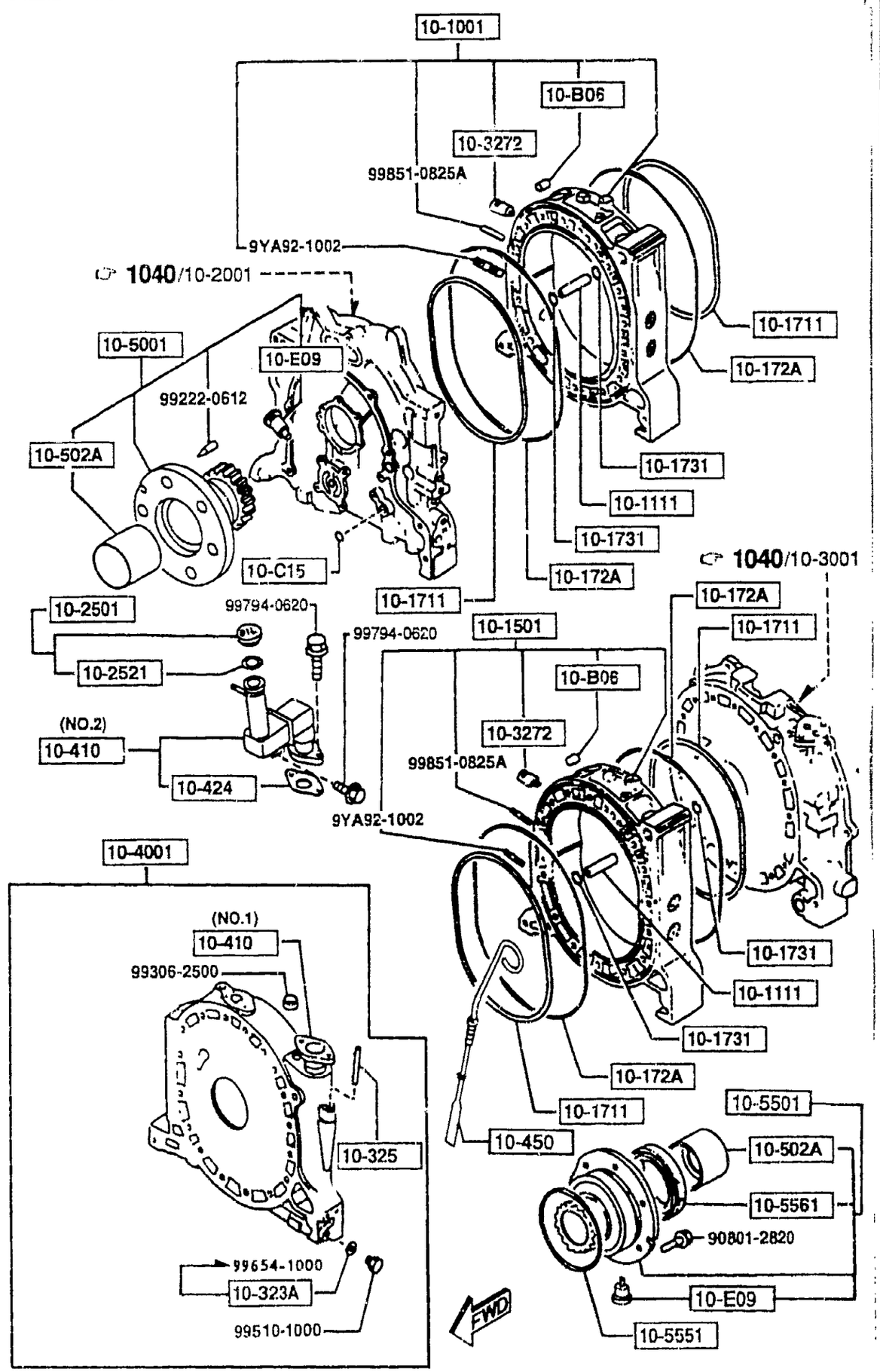

AUFA05

1030 -3 * ROTOR HOUSINGS

PART NO.	QTY	MODEL/RESTRICTION	MODEL/RESTRICTION	MODEL/RESTRICTION	FROM-TO
CONT'D A (N3YA-10-E10B)					
N3YA-10-E10B	1				3A01-3C01
N3A1-10-E1YC	1				3C01-
+---------+ | 10-5551 | +---------+		RING,'O'			
0813-10-555A	1				
+---------+ | 10-5561 | +---------+		SEAL,OIL			
166B-10-556A	1				

3A01 FD333*-300888
3C01 FD333*-301464

CAT. AUFA05-03

1995-03

1040 OIL PAN,FRONT & REAR HOUSING

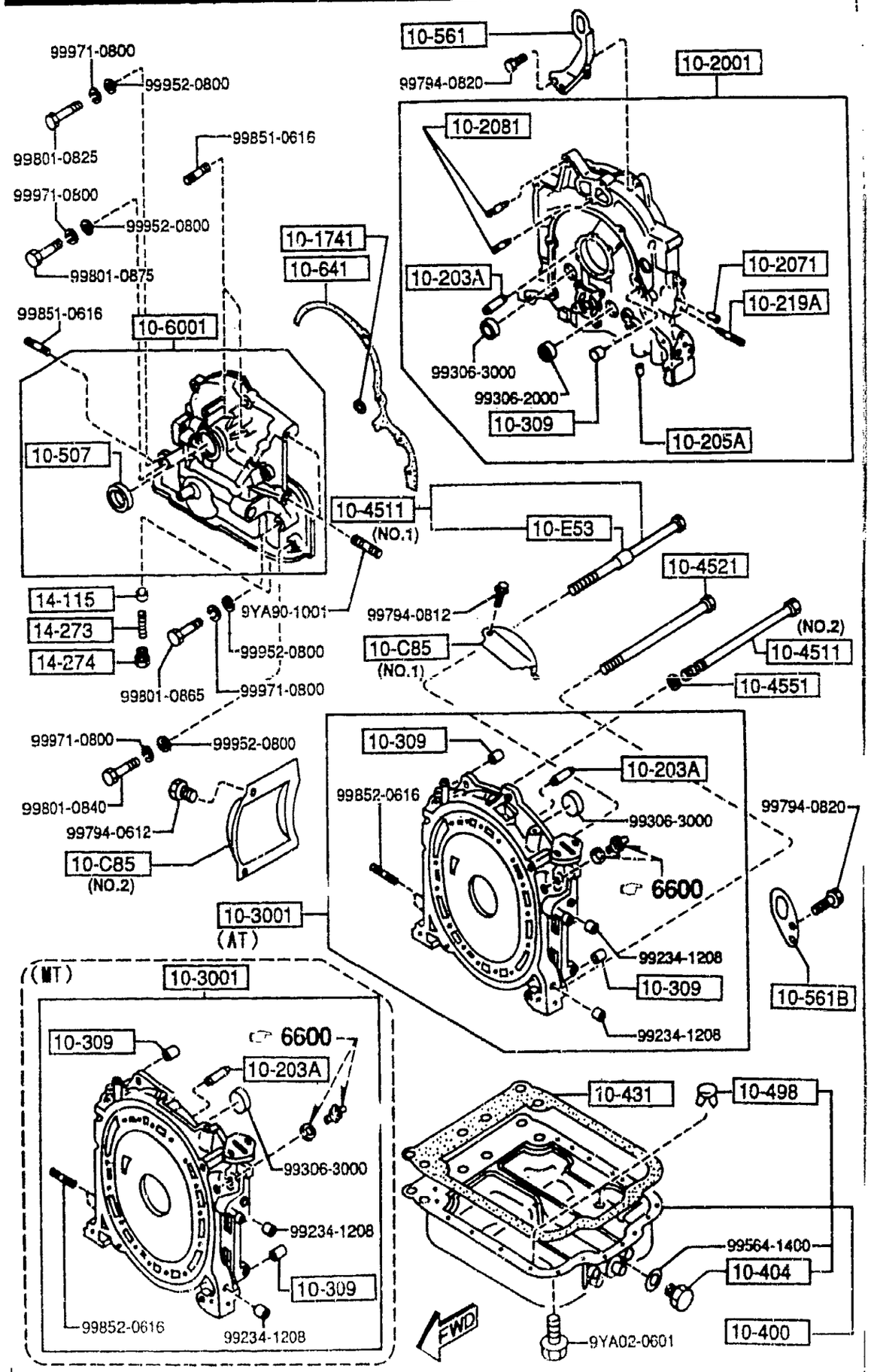

AUFA05

PART NO.	QTY	MODEL/RESTRICTION	MODEL/RESTRICTION	MODEL/RESTRICTION	FROM-TO
10-C85		COVER,DUST			
N350-10-C85	1	(ILLUST. NO.1) (MT)			
NF01-10-C86	1	(ILLUST. NO.2)			
10-E53		RING,'O'-TENSION BOLT			
N350-10-E56	1				
10-1741		RING,'O'			
N231-10-174	1				
10-2001		HOUSING,FRONT			
N3A1-10-C00C AN(N3A1-10-C00D)	1				-3C01
N3A1-10-C00D	1				3C01-
10-203A		PIN,DOWEL			
0839-10-203	2				
10-205A		PLUG,BLIND			
8562-10-205	3				
10-2071		PLUG,BLIND			
1757-10-207A	1				
10-2081		STUD			
N3A1-10-C08	4				
10-219A		STUD,HOUSING			
N249-10-219	1				
10-3001		HOUSING,REAR			
N3YA-10-C50C AN(N3YA-10-C50D)	1				-3C01
N3YB-10-C50C AN(N3YB-10-C50D)	1				-3C01
N3YA-10-C50D	1	(MT)			3C01-
N3YB-10-C50D	1	(AT)			3C01-
10-309		PIN,TUBULAR			
1757-10-309	4				

3C01 FD333*-301464

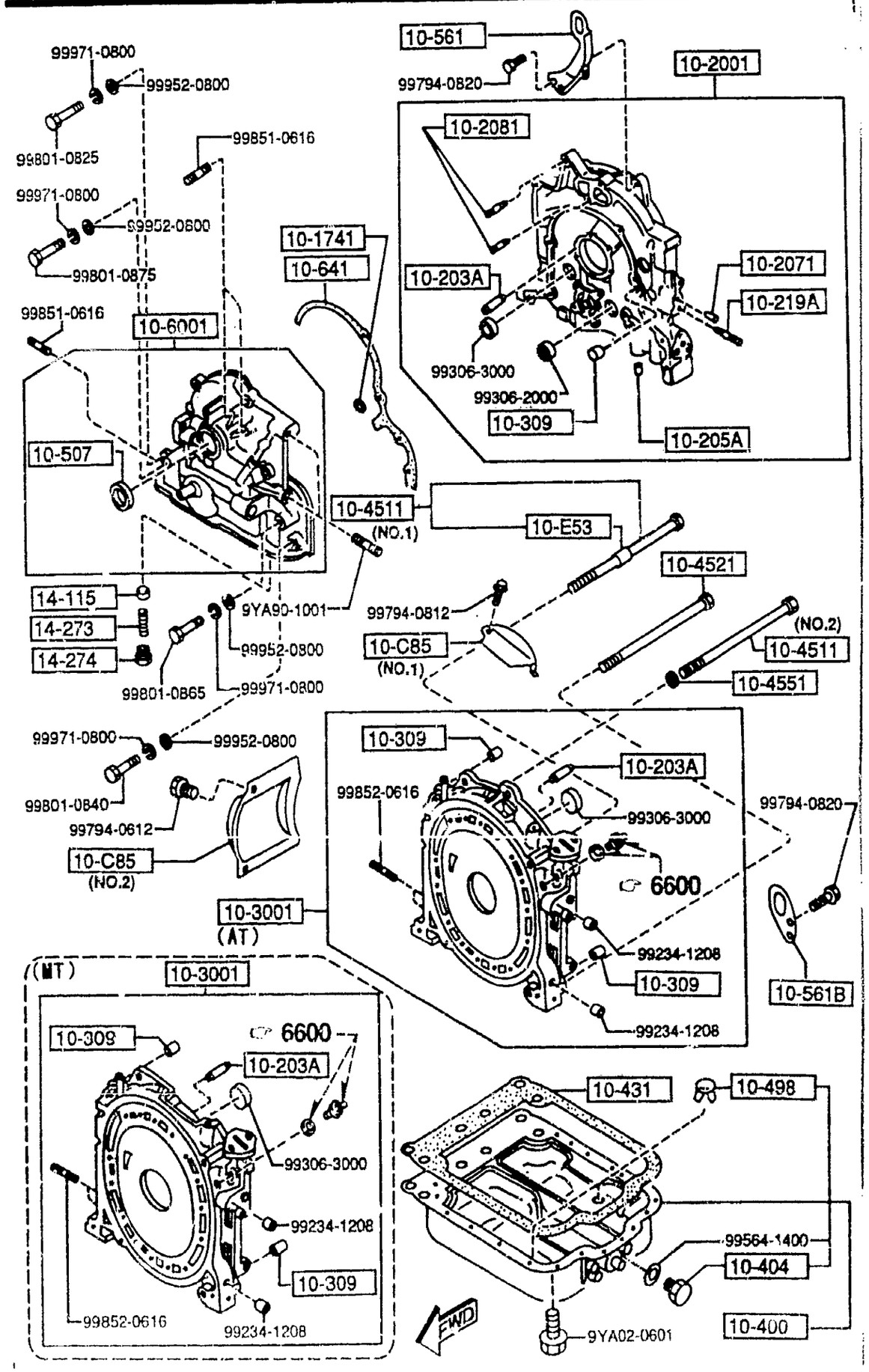

AUFA05

1040 -2 OIL PAN,FRONT & REAR HOUSING

PART NO.	QTY	MODEL/RESTRICTION	MODEL/RESTRICTION	MODEL/RESTRICTION	FROM-TO
10-400		PAN,OIL			
N3A1-10-400A	1				
10-404		PLUG,DRAIN			
HE03-10-404	1				
10-431		GASKET,OIL PAN			
N3YA-10-427	1				
10-4511		BOLT,TENSION			
N350-10-E50A	1	(ILLUST. NO.1)			
N350-10-E51B	17	(ILLUST. NO.2)			
10-4521		BOLT,TENSION			
N350-10-E61A	1				
10-4551		WASHER,SEAL			
0839-10-455	17				
10-498		CAP,BLIND-OIL PAN			
N3A1-10-498	2				
10-507		SEAL,OIL			
N3A1-10-507	1				
10-561		HANGER,ENGINE			
N3A1-10-560B	1				
10-561B		HANGER,ENGINE-REAR			
N3A1-10-566	1				
10-6001		COVER,FRONT			
N3A1-10-500	1				
10-641		GASKET,FRONT COVER			
N3A1-10-502	1				
14-115		PLUNGER,CONTROL			
0839-14-115	1				

1040 OIL PAN,FRONT & REAR HOUSING

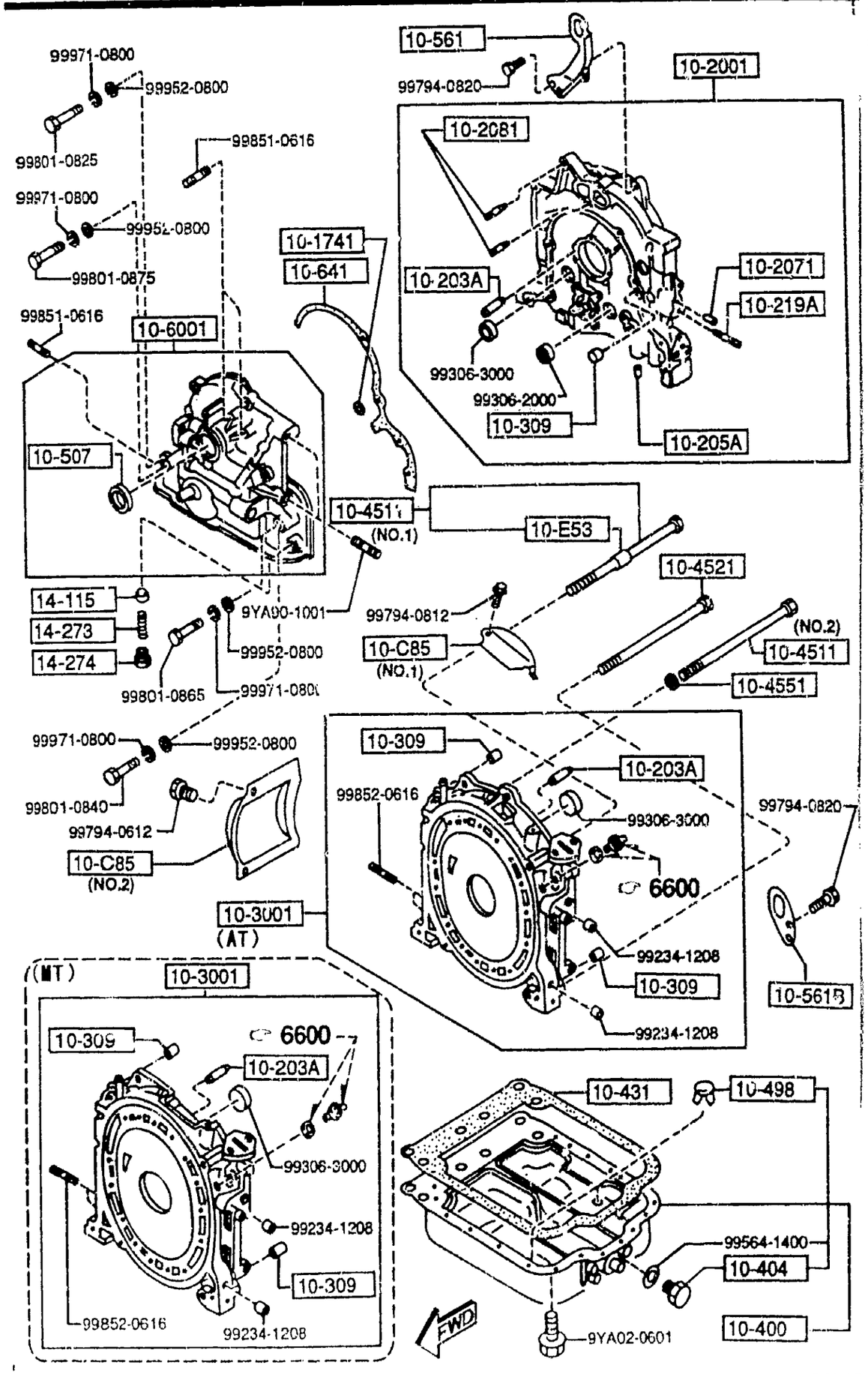

PART NO.	QTY	MODEL/RESTRICTION	MODEL/RESTRICTION	MODEL/RESTRICTION	FROM-TO
14-273		SPRING			
N3A1-14-273A	1				
14-274		PLUG			
0839-14-274	1				

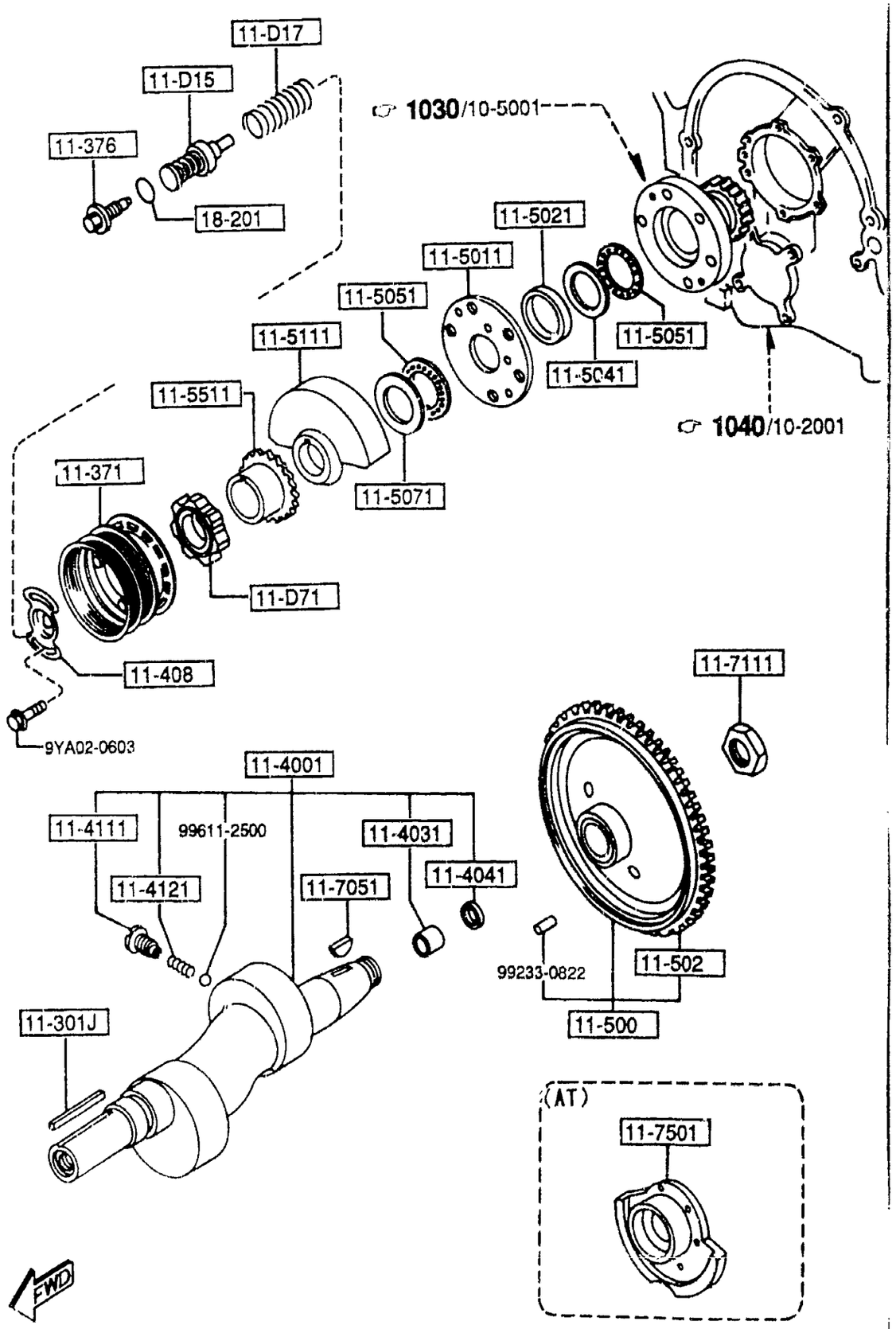

PART NO.	QTY	MODEL/RESTRICTION	MODEL/RESTRICTION	MODEL/RESTRICTION	FROM-TO
11-D15		PELLET,THERMO-ECCENTRIC			
N326-11-D15	1				
11-D17		SPRING,THERMO PELLET-E/S			
N326-11-D17	1				
11-D71		GEAR,DISTRIBUTOR			
N3C1-11-D71	1				
11-301J		KEY,WOODRUFF-PULLEY			
99236-0571	1				
11-371		PULLEY,CRANKSHAFT			
N3C1-11-400	1				
11-376		BOLT,PULLEY			
N3C1-11-406	1				
11-4001		SHAFT,ECCENTRIC			
N3A1-11-D00	1	(MT)			
N3A2-11-D00	1	(AT)			
11-4031		BEARING,NEEDLE			
N326-11-D03	1	(MT)			
11-4041		SEAL,OIL			
1881-11-404	1	(MT)			
11-408		PLATE,CRANKSHAFT PULLEY			
N3C1-11-408	1				
11-4111		PLUG,OIL JET			
N326-11-D11	2				
11-4121		SPRING			
0839-11-412	2				
11-500		WHEEL,FLY			
N3A1-11-500	1	(MT)			

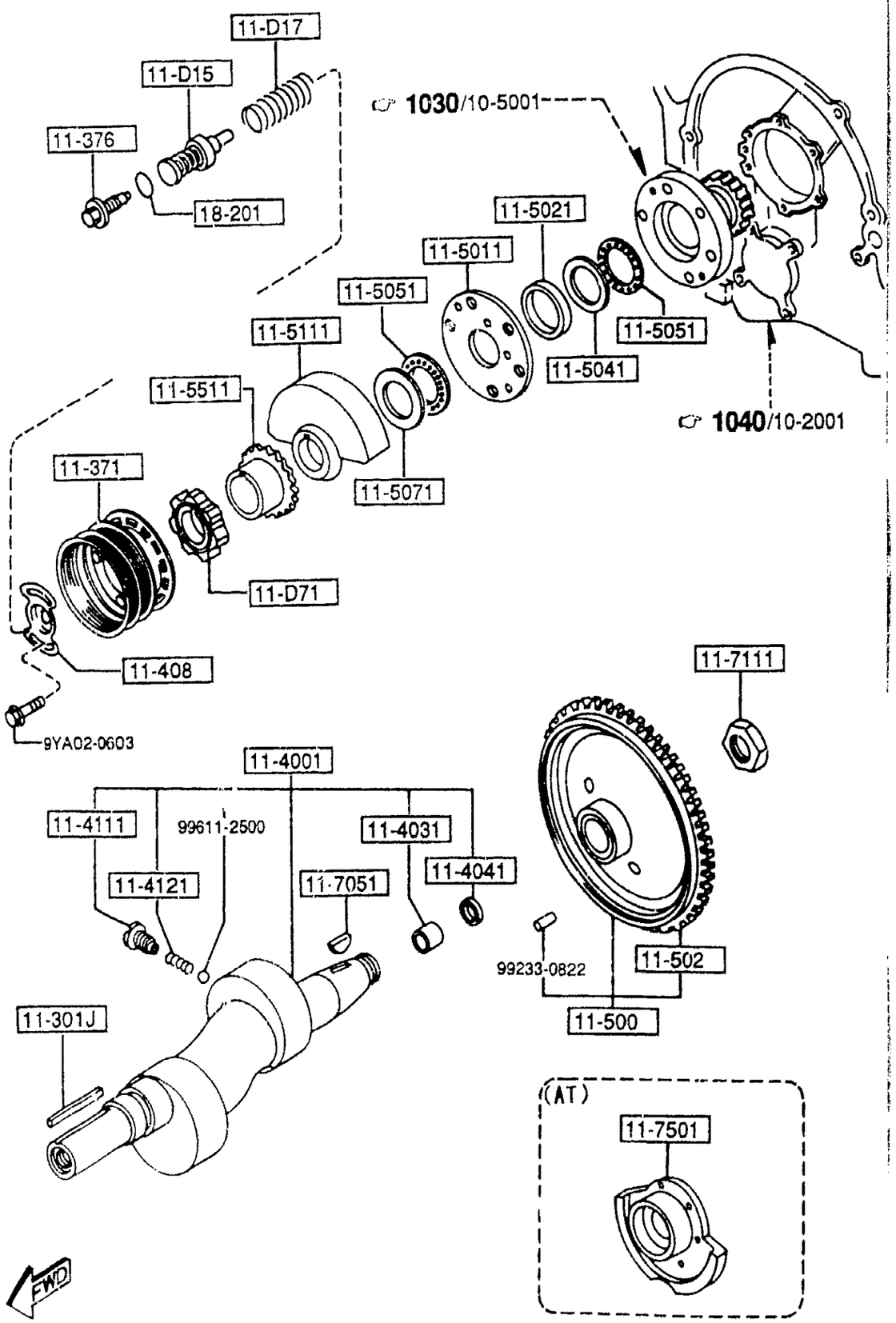

PART NO.	QTY	MODEL/RESTRICTION	MODEL/RESTRICTION	MODEL/RESTRICTION	FROM-TO
11-5011		PLATE			
NF01-11-D51	1				
11-502		GEAR,RING-FLY WHEEL			
N318-11-502A	1	(MT)			
11-5021		SPACER			
NF01-11-D55	1	L=8.0,-0.005/-0.025			
NF01-11-D56	1	L=8.0,-0.005/+0.015			
NF01-11-D57	1	L=8.0,+0.015/+0.035			
NF01-11-D58	1	L=8.0,+0.035/+0.055			
NF01-11-D59	1	L=8.0,+0.055/+0.075			
11-5041		PLATE,THRUST			
N390-11-D52	1				
11-5051		BEARING,NEEDLE			
NF01-11-D54	2				
11-5071		WASHER,THRUST			
NF01-11-D53	1				
11-5111		WEIGHT,BALANCE			
N3A7-11-D61	1	(MT)			
N3A8-11-D61	1	(AT)			
11-5511		GEAR,DRIVE-OIL PUMP			
N326-11-D75	1				
11-7051		KEY,FLY WHEEL			
0820-11-705	1				
11-7111		NUT,LOCK			
0810-11-711	1				
11-7501		WEIGHT,COUNTER			
N351-11-521	1	(AT)			

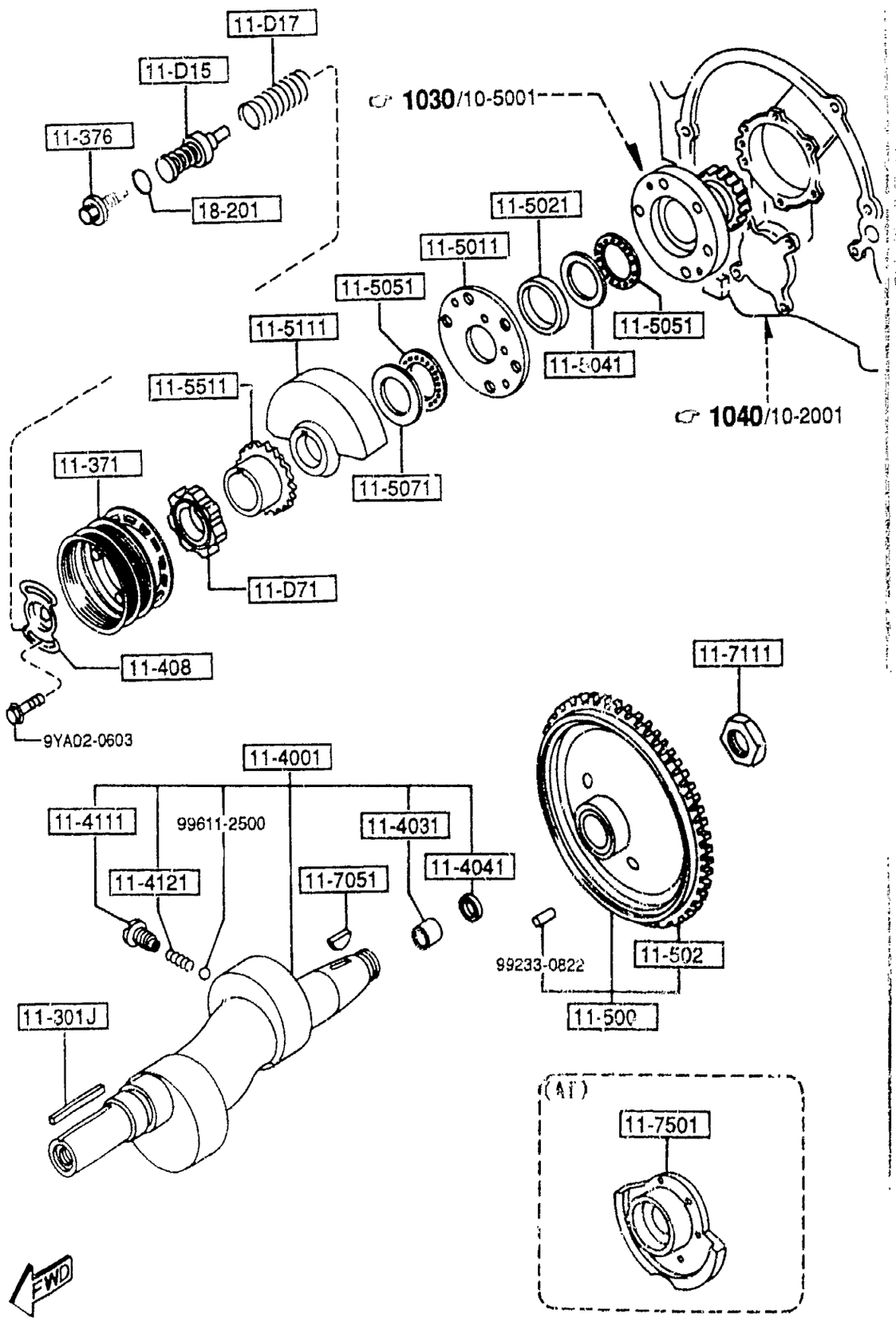

PART NO.	QTY	MODEL/RESTRICTION	MODEL/RESTRICTION	MODEL/RESTRICTION	FROM-TO
+----------+					
| 18-201 |		RING,'O'			
+----------+					
99541-01105	1				

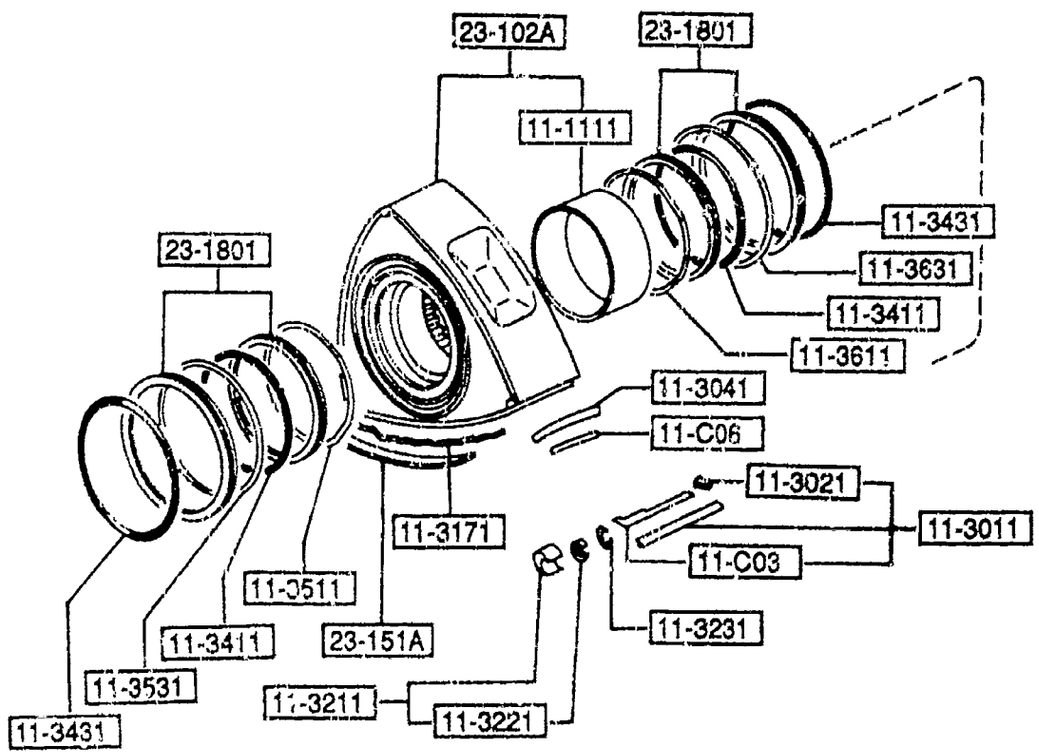

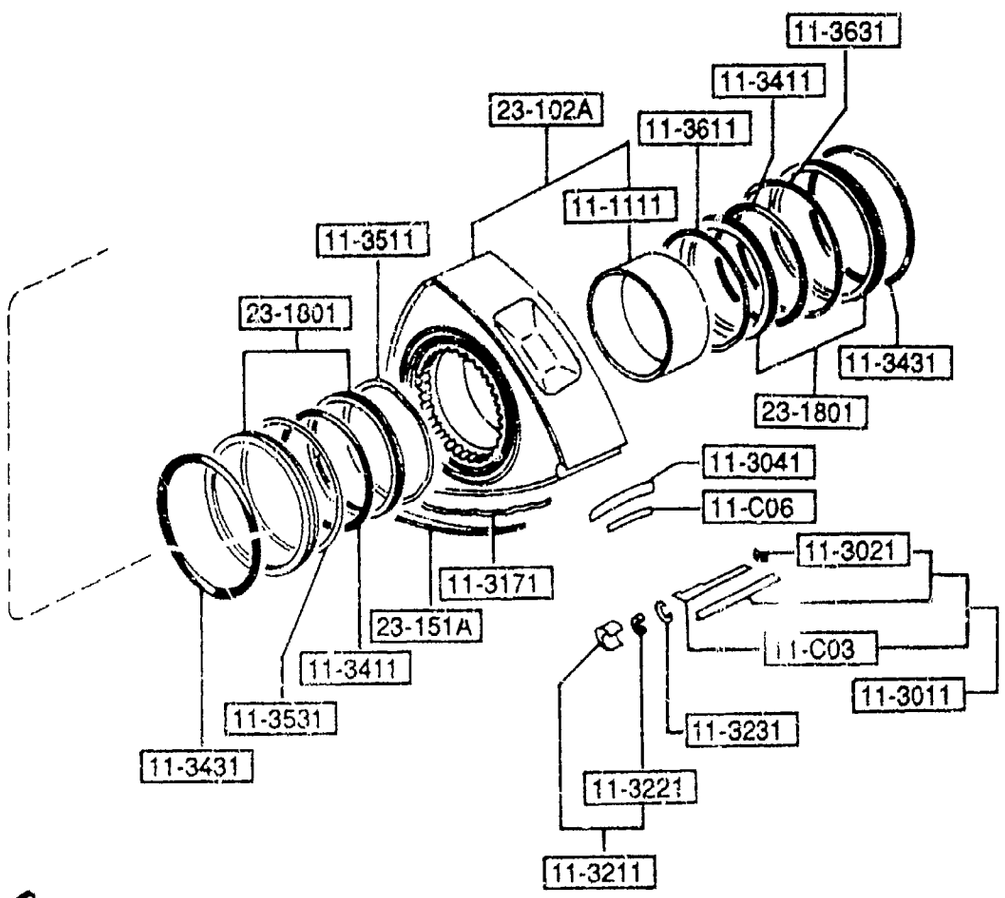

PART NO.	QTY	MODEL/RESTRICTION	MODEL/RESTRICTION	MODEL/RESTRICTION	FROM-TO
11-C03		PIECE,2ND.-APEX SEAL			
N326-11-C03A	6				
11-C06		SPRING,OUTER-APEX SEAL			
N326-11-C06A	6				
11-1111		METAL,ROTOR			
N3A1-11-B11	2	3.000(-0.005--0.010)			
N3A2-11-B11	2	3.000(0.000--0.005)			
N3A3-11-B11	2	3.000(+0.005-0.000)			
11-3011		SEAL,APEX			
N351-11-C00	6				
11-3021		PIECE,SIDE			
N326-11-C02A	6				
11-3041		SPRING,APEX SEAL			
N326-11-C04A	6				
11-3171		SPRING,SIDE SEAL			
NF01-11-C17	12				
11-3211		SEAL,CORNER			
N326-11-C20A	12				
11-3221		PLUG,CORNER SEAL			
N326-11-C22A	24				
11-3231		SPRING,CORNER SEAL			
NF01-11-C24	12				
11-3411		RING,'O'-INNER			
0820-11-341	4				
11-3431		RING,'O'-OUTER			
8341-11-343	4				

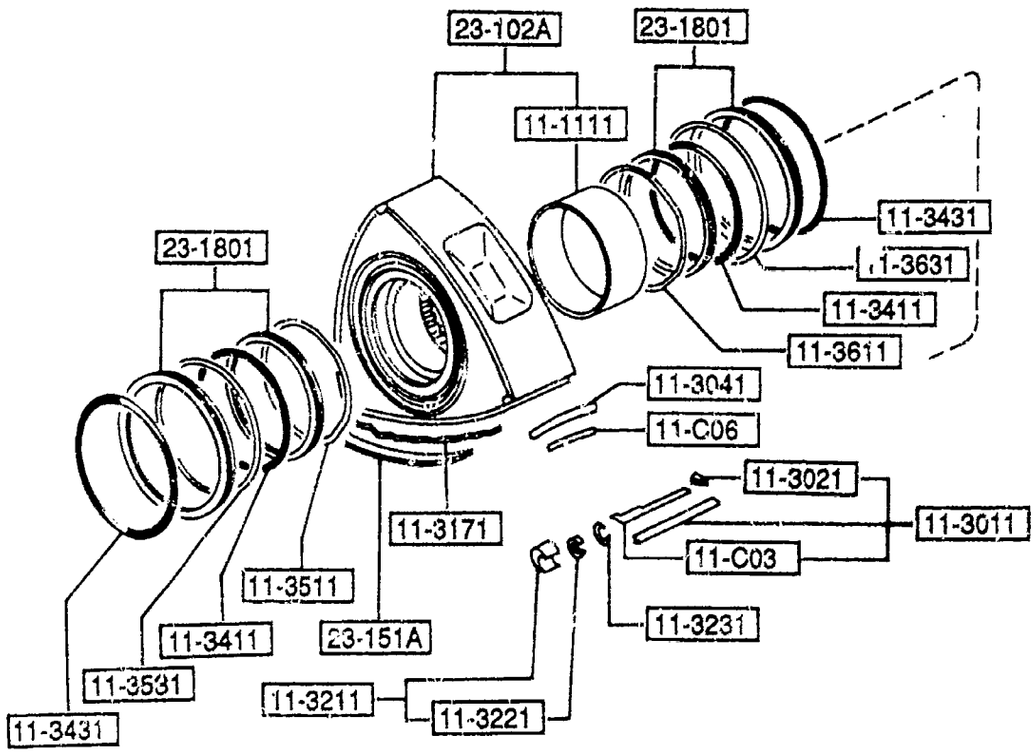

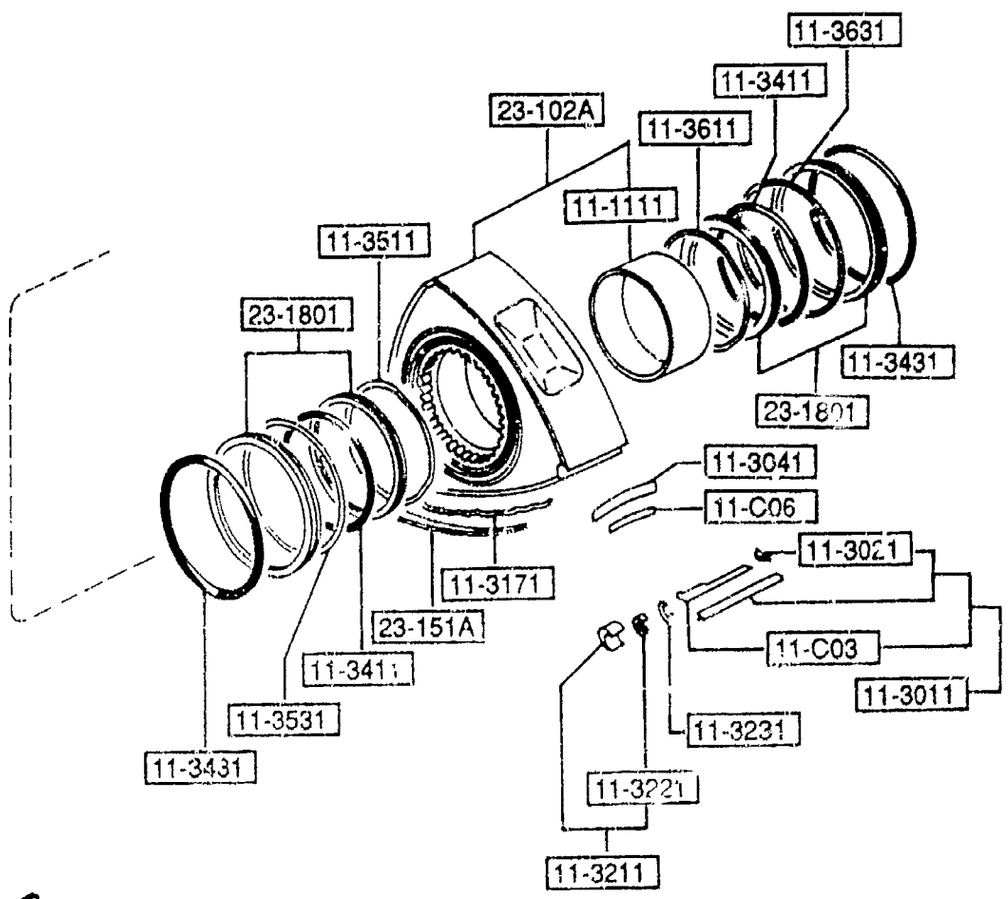

PART NO.	QTY	MODEL/RESTRICTION	MODEL/RESTRICTION	MODEL/RESTRICTION	FROM-TO
11-3511		SPRING,FRT.-INNER			
N225-11-351	2				
11-3531		SPRING,FRT.-OUTER			
1011-11-353A	2				
11-3611		SPRING,REAR-INNER			
N225-11-361	2				
11-3631		SPRING,REAR-OUTER			
1011-11-363A	2				
23-102A		ROTOR			
N3YA-11-B10	2				
23-151A		SEAL,SIDE			
N3Y1-11-C11	12				
23-1801		SEAL SET,OIL			
88T1-23-180	4				

1300 INLET MANIFOLD

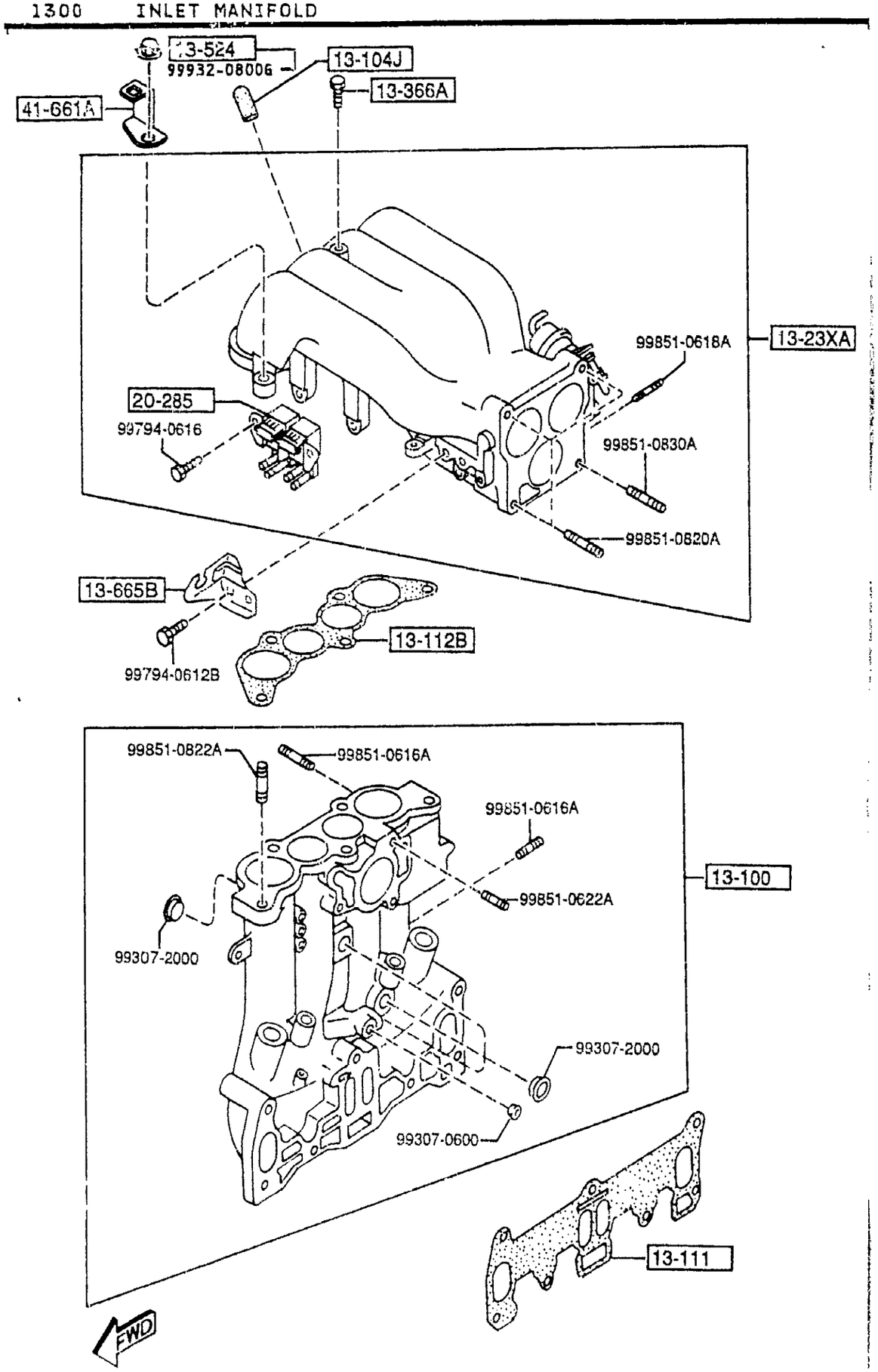

PART NO.	QTY	MODEL/RESTRICTION	MODEL/RESTRICTION	MODEL/RESTRICTION	FROM-TO
13-100		MANIFOLD,INLET			
N3C1-13-100	1				
13-104J		CAP,BLIND			
1010-13-104	1				
13-111		GASKET,IN.MANIFOLD			
N3A1-13-111	1				-3805
A (N3A1-13-111A)					
N3A1-13-111A	1				3805-
13-112B		GASKET NO.2,IN. MANI FOLD			
N3A1-13-112	1				
13-23XA		MANIFOLD(R),EXTENSIO N			
N3A1-13-23XB	1				
13-366A		BOLT			
NF01-13-366	1				
13-524		NUT			
NF01-13-524	4				-3901
13-665B		BRACKET,ACCEL WIRE			
N3A1-13-661	1				
20-285		VALVE,DUTY SOLENOID			
N3A1-20-285	1				
41-661A		BRACKET,ACCEL CABLE			
FD01-41-661B	1				

3805 FD333*-300031
3901 FD333*-300438

1310 EXHAUST MANIFOLD

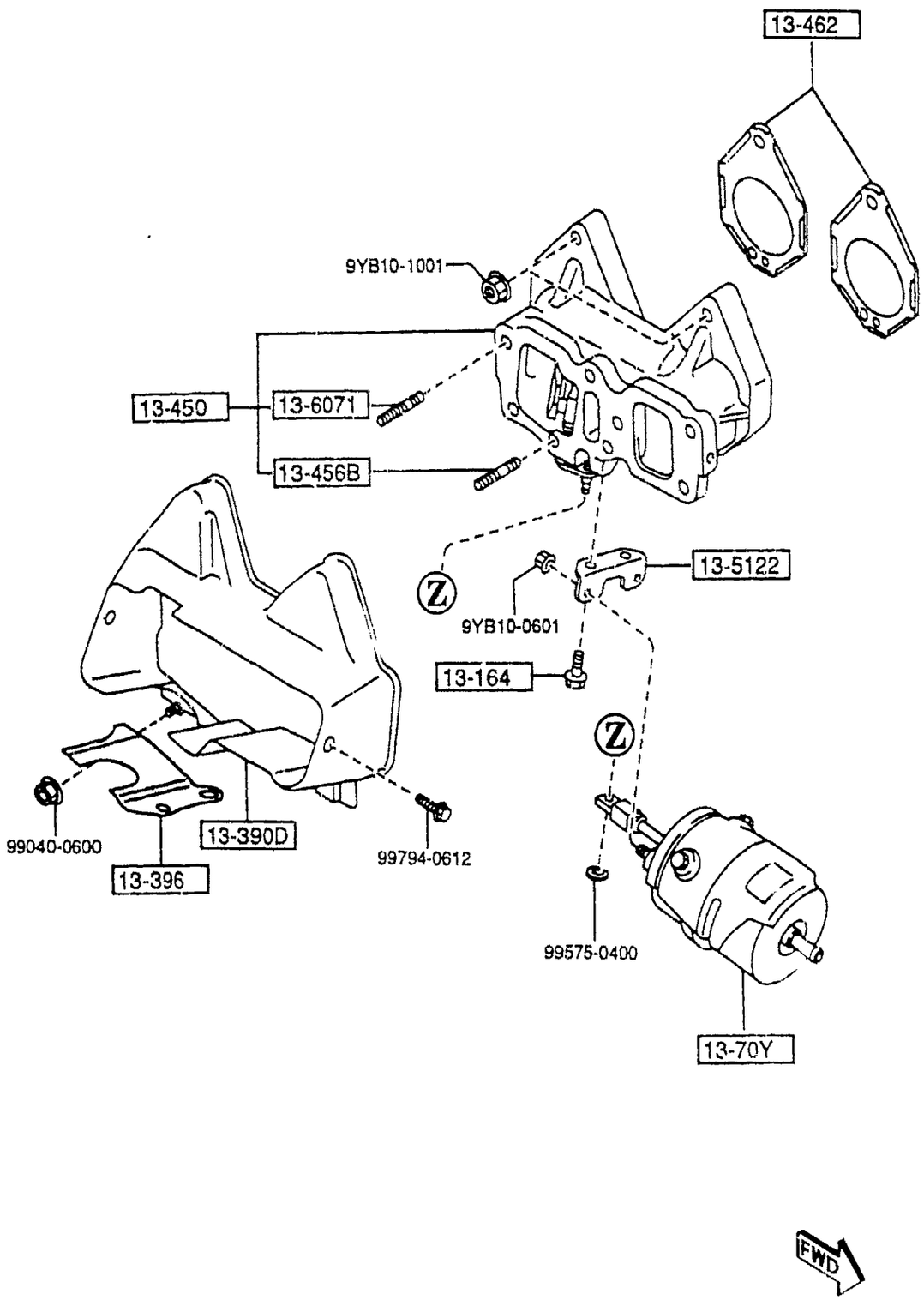

PART NO.	QTY	MODEL/RESTRICTION	MODEL/RESTRICTION	MODEL/RESTRICTION	FROM-TO
13-164 N350-13-164	2	BOLT,FUEL DISTRIBUTOR			
13-390D N3A1-13-390B	1	INSULATOR,EX.MANIFOLD			
13-396 N3A1-13-396A	1	INSULATOR,SUB			
13-450 N3A1-13-450A	1	MANIFOLD,EXHAUST			
13-456B N391-13-456	1	STUD,EX.MANIFOLD			
13-462 N3A1-13-461	2	GASKET,EX.MANIFOLD			
13-5122 N3C1-13-468	1	BRACKET,EX.MANIFOLD			
13-6071 MF01-13-70BA	5	STUD			
13-70Y N3A1-13-70Y	1	ACTUATOR,EXHAUST VALVE			

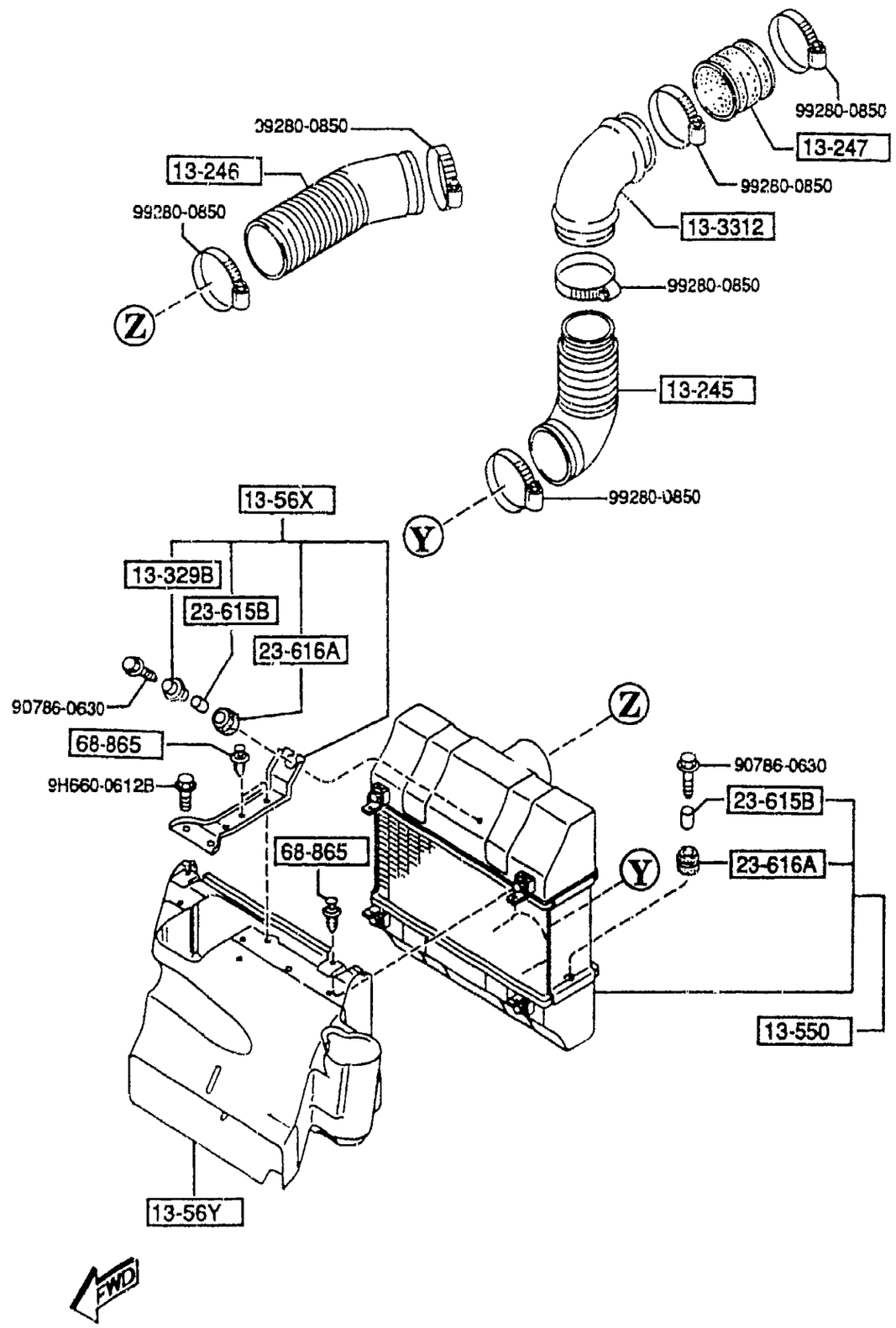

PART NO.	QTY	MODEL/RESTRICTION	MODEL/RESTRICTION	MODEL/RESTRICTION	FROM-TO
13-245		JOINT,RUBBER			
N3C1-13-245	1				
13-246		JOINT,RUBBER			
N3A1-13-246A	1				
13-247		JOINT,RUBBER			
N3A2-13-247	1				
13-329B		SPACER			
N3A1-13-329	1				
13-3312		PIPE,AIR INTAKE			
N3A1-13-33X	1				
13-550		CHARGE,AIR COOLER			
N3A1-13-550	1				
13-56X		BRACKET,INTER COOLER			
N3A1-13-56X	1				
13-56Y		DUCT,AIR-INTER COOLE R			
N3A1-13-56YB	1				
23-615B		COLLAR			
SL50-13-Z11	3				
23-616A		INSULATOR			
SL50-13-Z08	3				
68-865		FASTENER			
BR70-68-865	6				

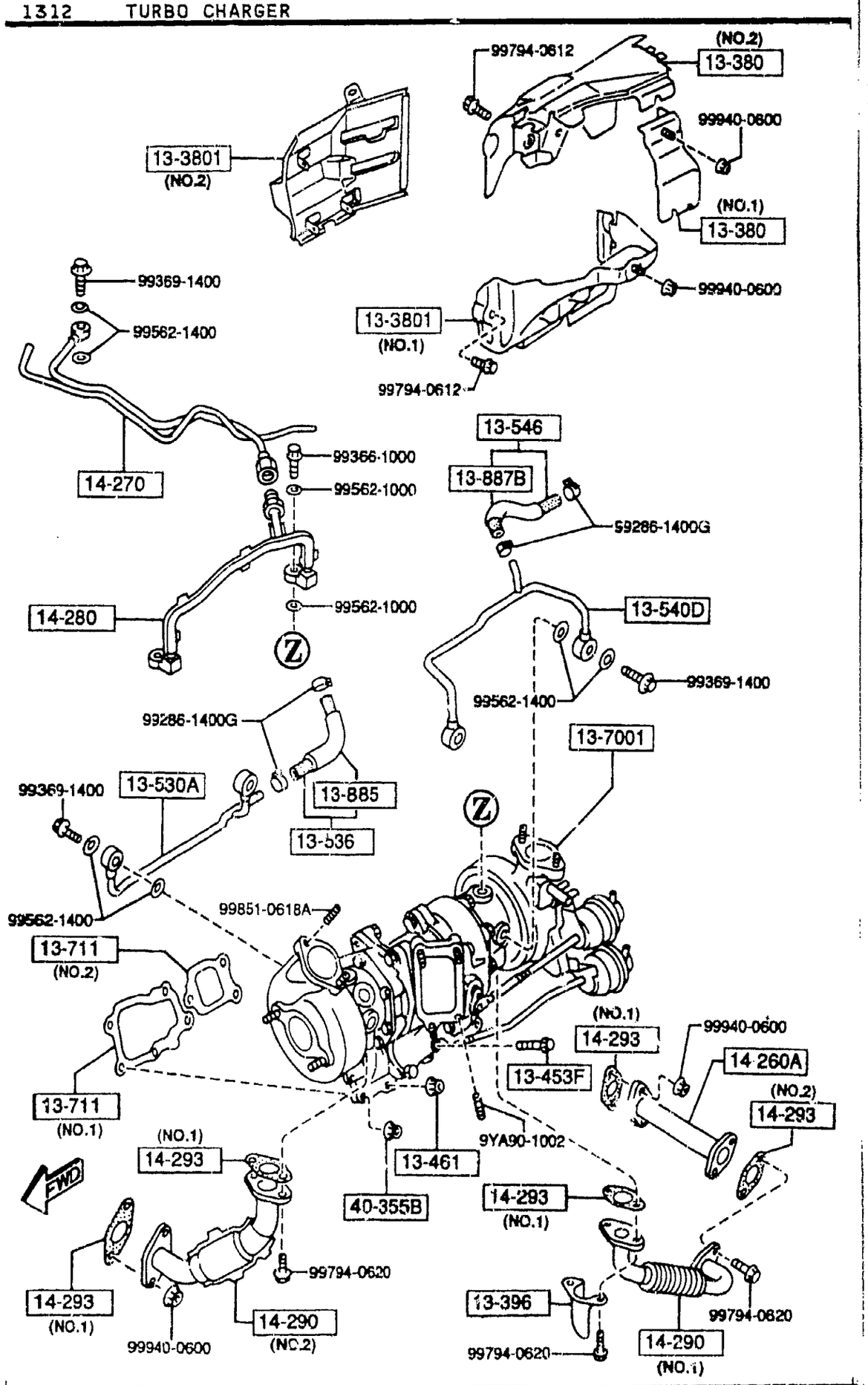

AUFA05

1312 -1 TURBO CHARGER

PART NO.	QTY	MODEL/RESTRICTION	MODEL/RESTRICTION	MODEL/RESTRICTION	FROM-TO
13-380		INSULATOR,HEAT			
N3A1-13-380	1	(ILLUST. NO.1)			
N3A1-13-385A	1	(ILLUST. NO.2)			
13-3801		PLATE,ABSORBER			
N3A1-13-C80B	1	(ILLUST. NO.1)			
N3A2-13-C80C	1	(ILLUST. NO.2)			
13-396		INSULATOR,SUB			
N3A1-13-397A	1				
13-453F		BOLT,INSULATOR			
N390-13-453A	2				
13-461		NUT,EX.MANIFOLD			
E5B6-13-461B	1				
13-530A		PIPE,WATER IN -T/C			
N3C1-13-530	1				
13-536		HOSE,WATER-TURBOCHARGER			
N3A1-13-53X	1				
13-540D		PIPE,WATER			
N3A1-13-540A	1				
13-546		HOSE,WATER-T/C WATER -PIPE			
N3A1-13-54X	1				
13-7001		TURBOCHARGER			
N3C1-13-700	1				
13-711		GASKET,TURBOCHARGER			
N3A1-13-710	1	(ILLUST. NO.1)			
N3A2-13-710	1	(ILLUST. NO.2)			
13-885		PROTECTOR,SPONGE			
N3A1-13-885	1				
13-887B		PROTECTOR,SPONGE			

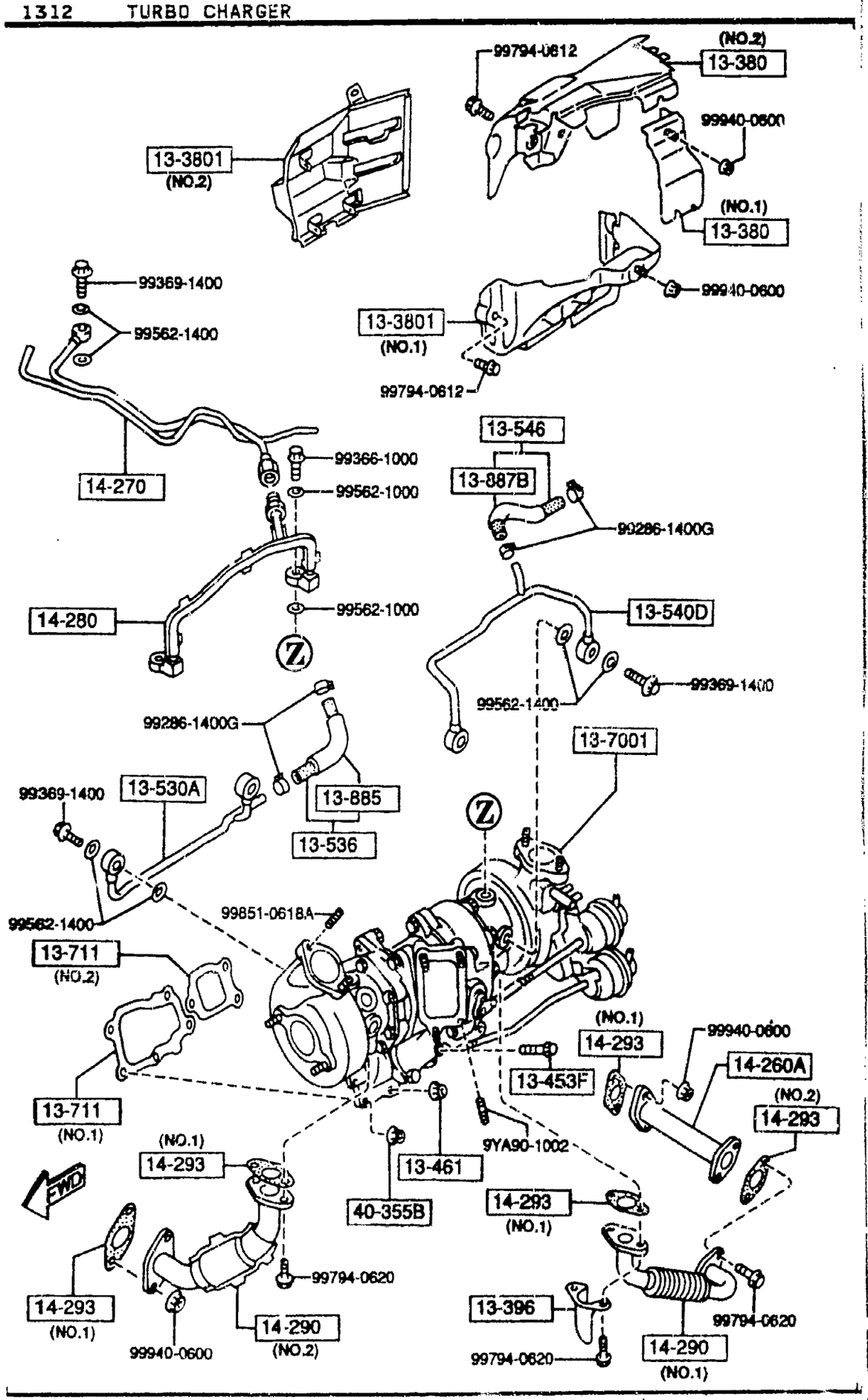

AUFA05

1312 -2 * TURBO CHARGER

PART NO.	QTY	MODEL/RESTRICTION	MODEL/RESTRICTION	MODEL/RESTRICTION	FROM-TO
CONT'D					
N3A1-13-887	1				
14-260A		PIPE,OIL OUTLET-F.COVER			
N3A1-14-260	1				
14-270		PIPE,OIL			
N3A1-14-270A	1				
14-280		PIPE,OIL			
N3A1-14-280A	1				
14-290		PIPE,OIL			
N3A1-14-290A	1	(ILLUST. NO.1)			
N3A2-14-290A	1	(ILLUST. NO.2)			
14-293		GASKET,OIL PIPE			
N3A1-14-293	4	(ILLUST. NO.1)			
N3A2-14-293	1	(ILLUST. NO.2)			
40-355B		NUT			
JE10-40-355	5				

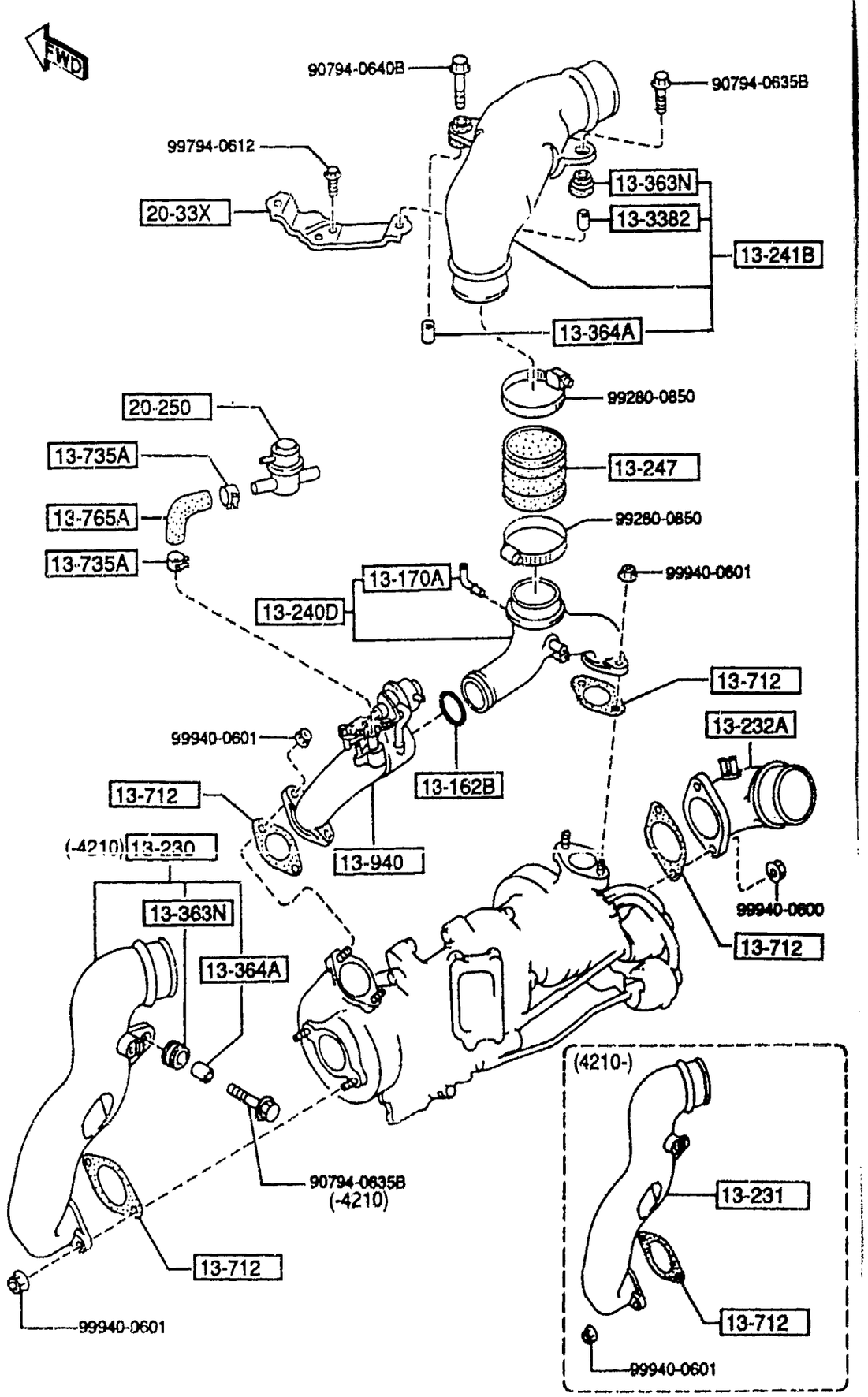

PART NO.	QTY	MODEL/RESTRICTION	MODEL/RESTRICTION	MODEL/RESTRICTION	FROM-TO
13-162B		RING,'O'-INLET MANIFOLD			
N3A1-13-162	1				
13-170A		CONNECTOR,HOSE			
N3A3-13-170	1				
13-230		PIPE,AIR INTAKE			
N3A1-13-230	1				-4210
AN(N3A1-13-231)					
13-231		PIPE,AIR			
*N3A1-13-231	1				4210-
13-232A		PIPE,AIR INTAKE			
N3A1-13-232	1				
13-240D		PIPE,AIR INTAKE-INT. COOLE			
N3A1-13-24XA	1				
13-241B		PIPE,AIR INTAKE			
N3A1-13-240A	1				
13-247		JOINT,RUBBER			
N3A2-13-247	1				
13-3382		SPACER			
FE51-13-329	1				
13-363N		RUBBER,MOUNTING			
FE51-13-363	3				-4210
FE51-13-363	2				4210-
13-364A		SPACER			
NF02-13-364	2				-4210
NF02-13-364	1				4210-
13-712		GASKET,TURBO			
N3A1-13-712	4				
13-735A		CLAMP,HOSE			
NF01-13-735	2				

4210 FD333*-302425

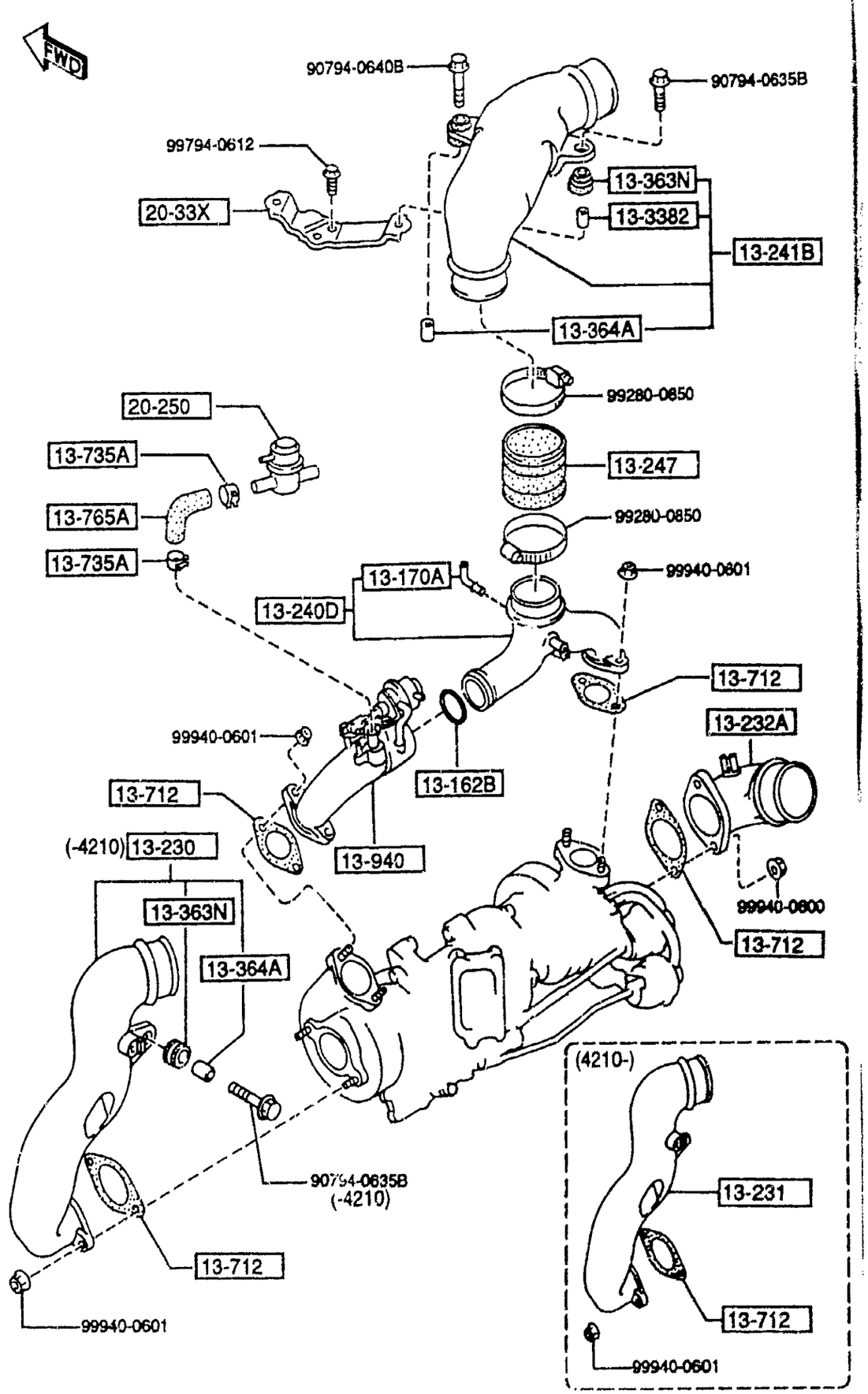

1313 -2 * TWIN TURBO AIR INTAKE SYSTEM

PART NO.	QTY	MODEL/RESTRICTION	MODEL/RESTRICTION	MODEL/RESTRICTION	FROM-TO
13-765A N3A1-13-765	1	HOSE,AIR			
13-940 N3C1-13-36Y	1	VALVE,CONTROL			
20-250 N390-20-250	1	VALVE,AIR BYPASS			
20-33X N3A1-20-33X	1	BRACKET,VACUUM CHAMBER			

1320 FUEL SYSTEM

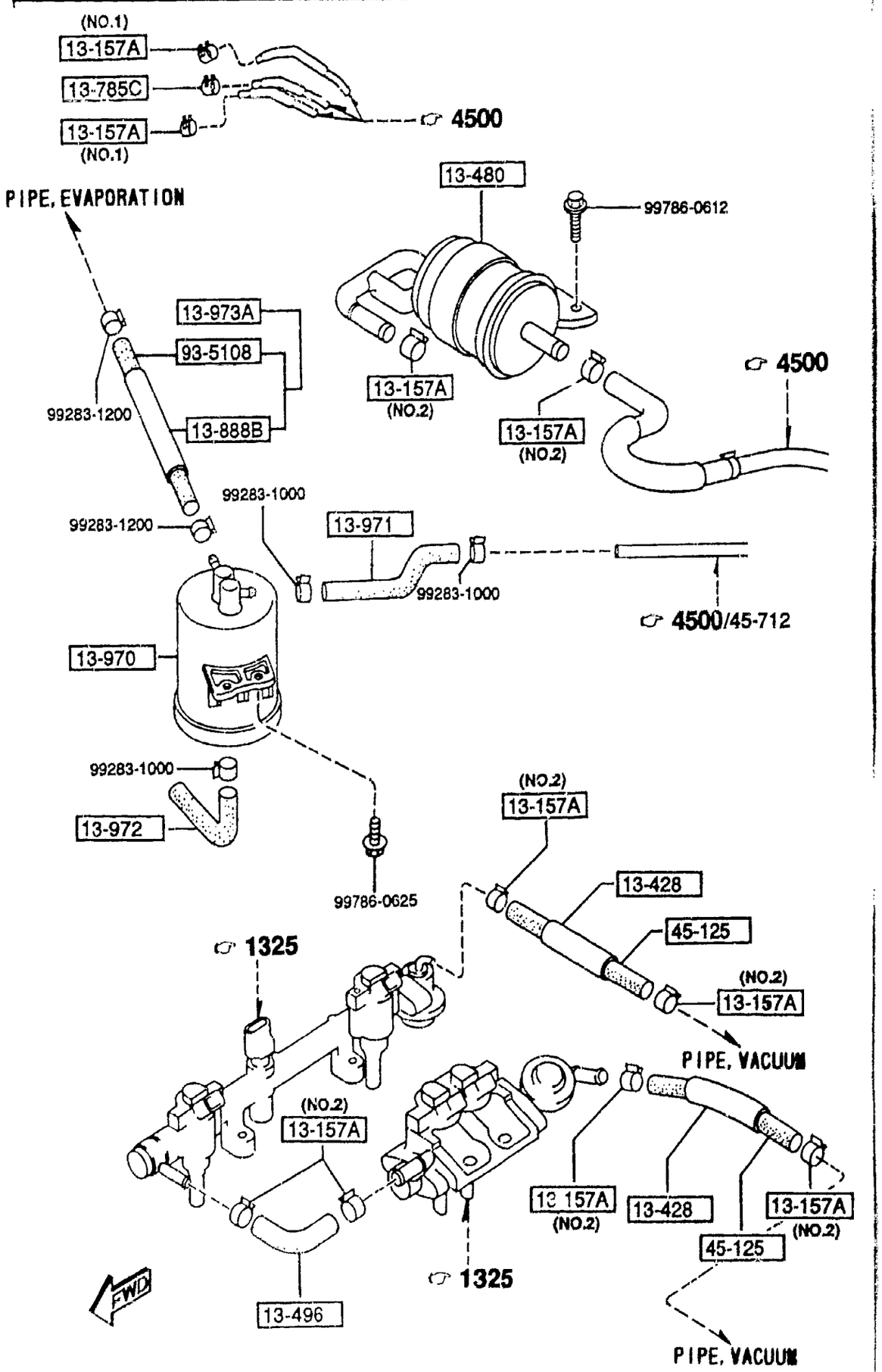

PART NO.	QTY	MODEL/RESTRICTION	MODEL/RESTRICTION	MODEL/RESTRICTION	FROM-TO
13-157A		CLIP			
B631-13-157	2	(ILLUST. NO.1)			
8574-13-157	8	(ILLUST. NO.2)			
13-428		PROTECTOR			
N326-13-428A	2				
13-480		FILTER,FUEL			
N3A1-20-490	1				
13-496		HOSE,FUEL			
N3A1-13-496	1				
13-785C		CLIP,HOSE			
N3A1-13-785	1				
13-888B		PROTECTOR,VACUUM TUBE			
N3A3-13-888	1				
13-970		CANISTER			
N3A1-13-970	1				
13-971		HOSE,VENTILATION			
N3A1-13-971	1				
13-972		HOSE,EVAPORATION			
N3A1-13-972	1				
13-973A		HOSE,EVAPORATION			
N3A3-13-97X	1				
45-125		HOSE,FUEL			
99359-0814	2				
93-5108		HOSE			
99351-08999	1				

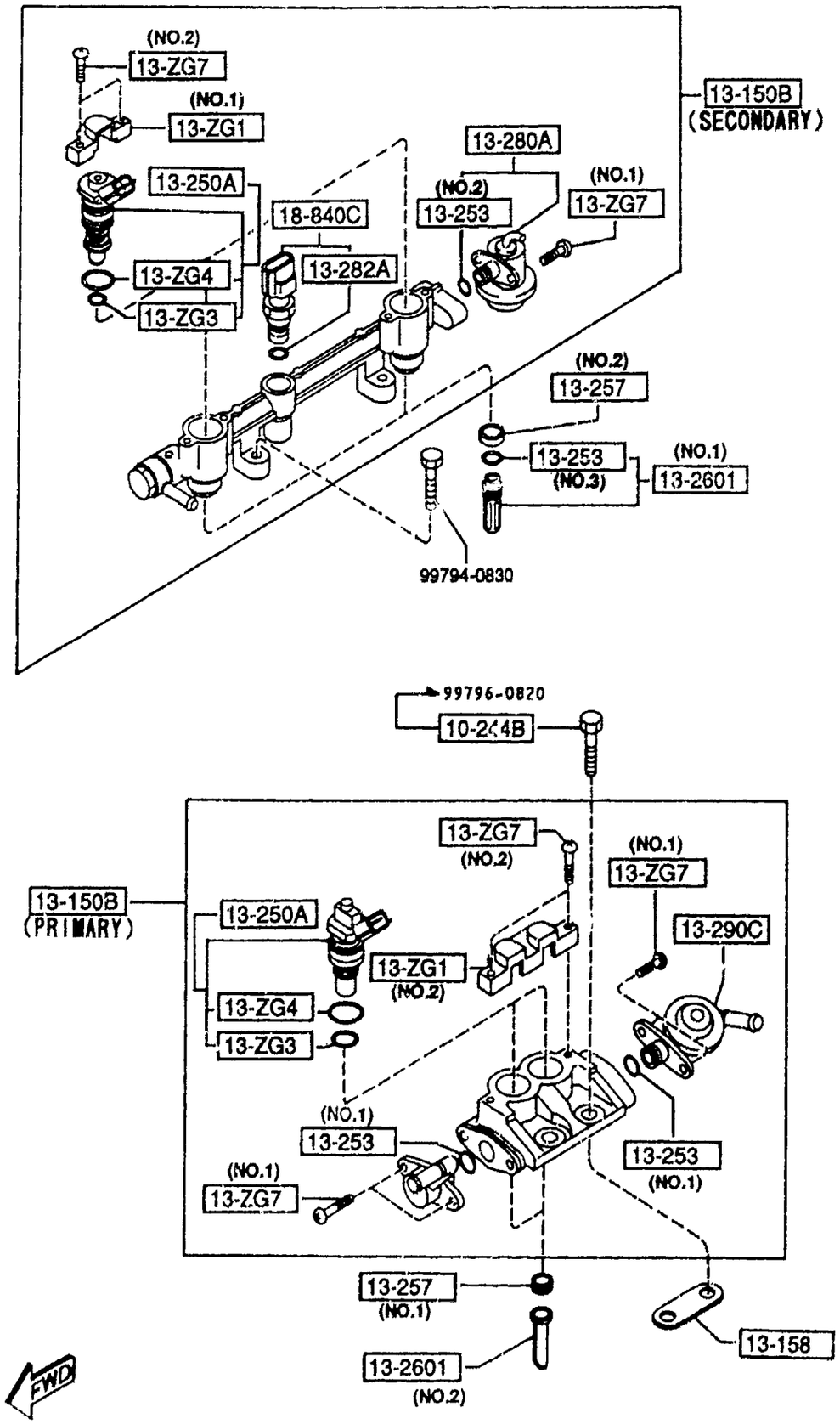

PART NO.	QTY	MODEL/RESTRICTION	MODEL/RESTRICTION	MODEL/RESTRICTION	FROM-TO
10-244B		BOLT,FUEL INJECTION PUMP			
4767-10-244	2				-3901
13-ZG1		COVER,INJECTOR			
JE48-13-ZG1	2	(ILLUST. NO.1)			
N390-13-ZG1	1	(ILLUST. NO.2)			
13-ZG3		RING,'O'-INJECTOR			
NF01-13-ZG3	4				
13-ZG4		RING,'O'-INJECTOR			
NF01-13-ZG4	4				
13-ZG7		SCREW,FUEL DIS.			
N3A3-13-ZG7	6	(ILLUST. NO.1)			
N3A4-13-ZG7	6	(ILLUST. NO.2)			
13-150B		DISTRIBUTOR,FUEL			
N3A1-13-150	1	(PRIMARY)			
N3A2-13-150	1	(SECONDARY)			
13-158		INSULATOR,FUEL DIST.			
N326-13-158	1				
13-250A		INJECTION,FUEL-M.P.ELECT.			
N3A1-13-250	2	(PRIMARY)			
N3A2-13-250	2	(SECONDARY)			
13-253		RING,'O'			
N3A1-13-ZG3	2	(ILLUST. NO.1)			
8574-13-253	1	(ILLUST. NO.2)			
99541-01252	2	(ILLUST. NO.3)			
13-257		INSULATOR,INJECTION			
NF01-13-257A	2	(ILLUST. NO.1)			
N3A1-13-257	2	(ILLUST. NO.2)			
13-2601		SOCKET,AIR BLEED			
N3A1-13-C60	2	(ILLUST. NO.1)			

3901 FD333*-300438

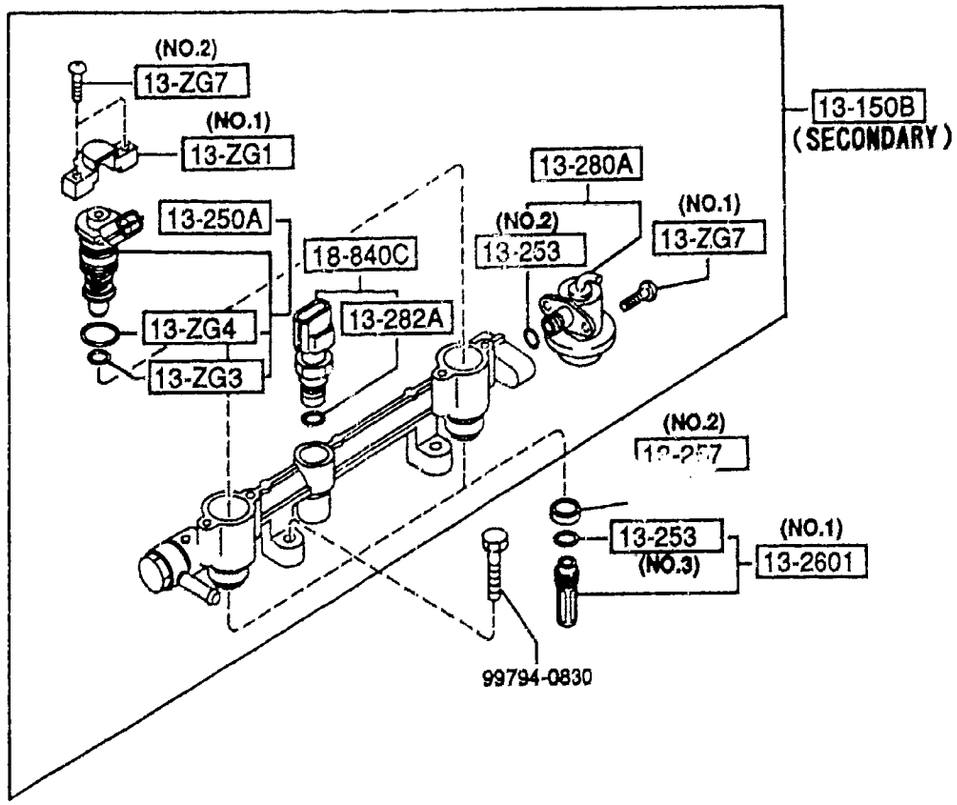

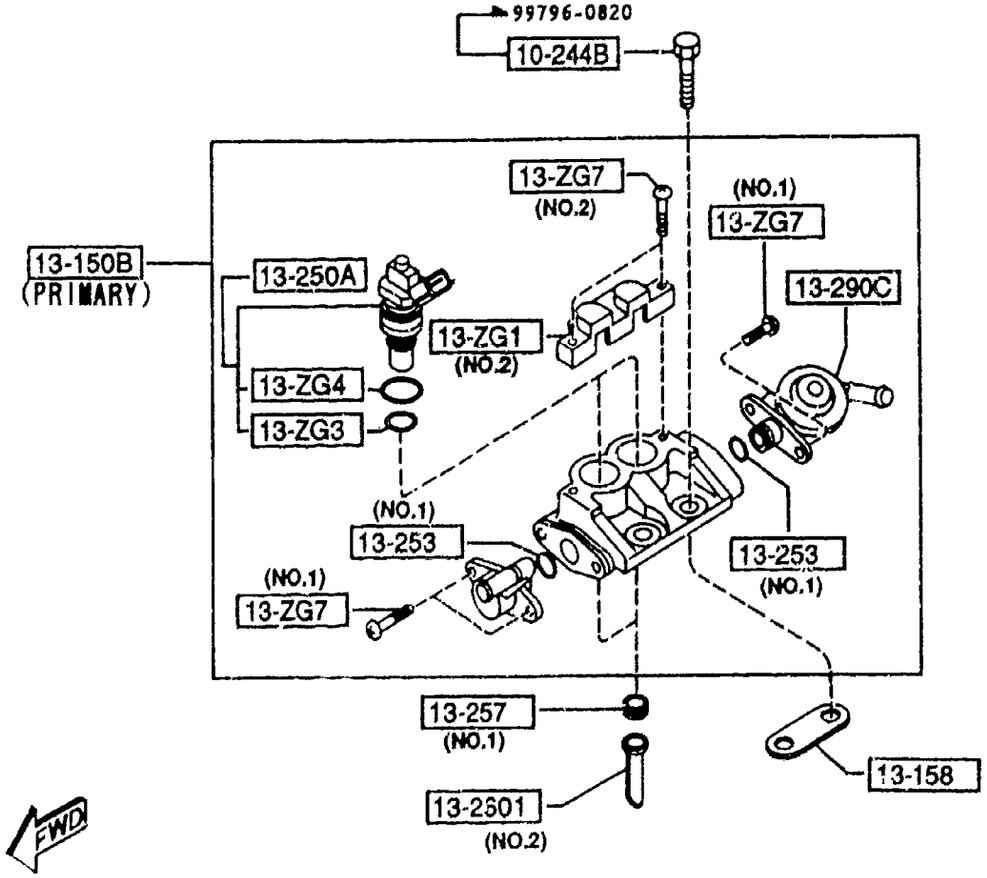

PART NO.	QTY	MODEL/RESTRICTION	MODEL/RESTRICTION	MODEL/RESTRICTION	FROM-TO
CONT'D					
N3A2-13-C61	2	(ILLUST. NO.2)			
13-280A		PRESSURE RG.,FUEL			
N3A1-13-280	1				
13-282A		RING,'O'-PRESSURE REGU.			
N253-13-282	1				
13-290C		DAMPER,PULSATION			
N3A2-20-180	1				
18-840C		SENSOR,TEMP.-ENG.COOLANT			
N391-18-840	1				

1330 AIR CLEANER

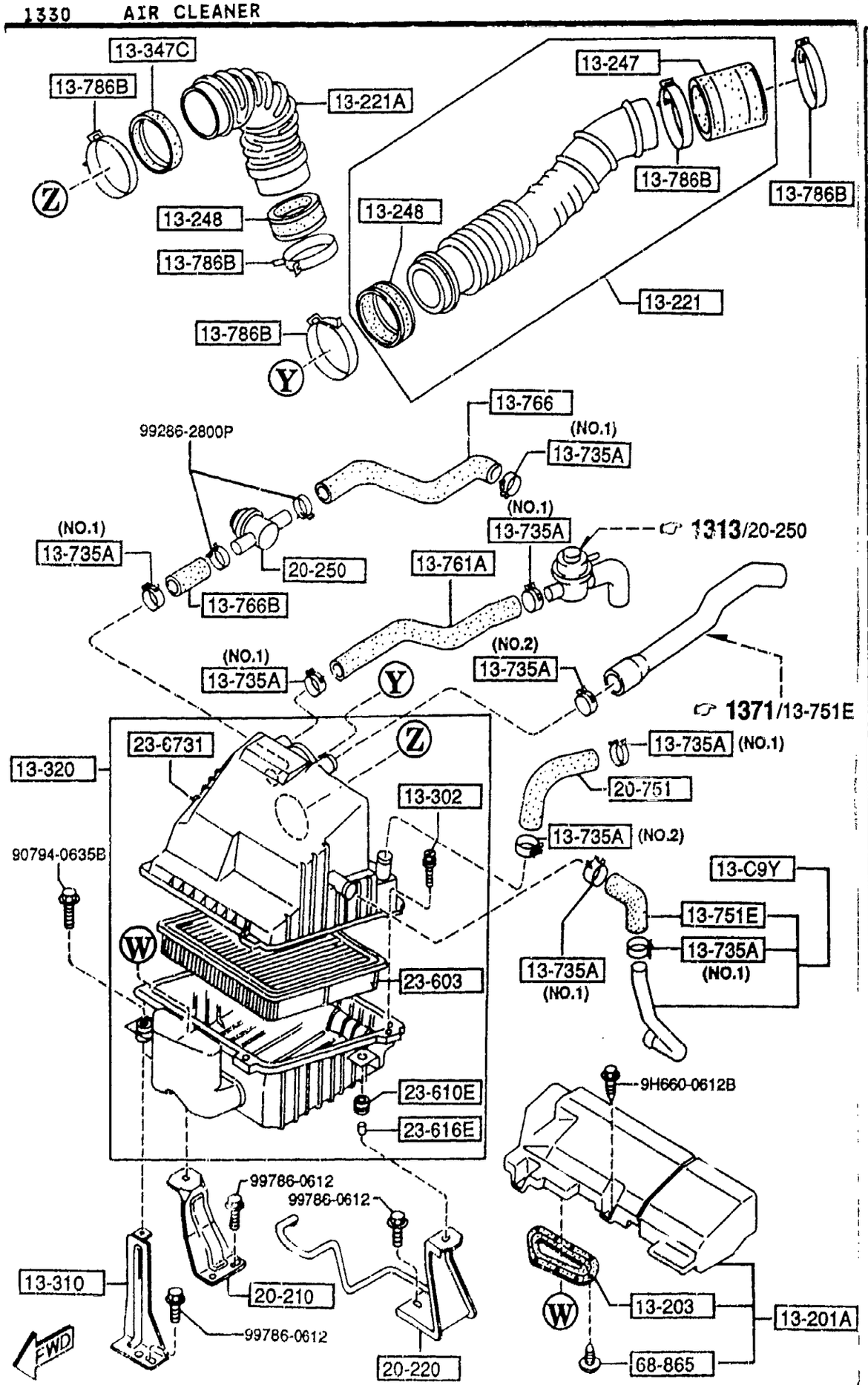

AUFA05

PART NO.	QTY	MODEL/RESTRICTION	MODEL/RESTRICTION	MODEL/RESTRICTION	FROM-TO
13-C9Y		PIPE,RELIEF			
N3C1-13-C9Y	1				
13-201A		DUCT,FRESH AIR			
N3A1-13-200	1				
13-203		RUBBER,SEAL-FRESH AI R DUC			
N3A1-13-203	1				
13-221		HOSE,AIR			
N3A1-13-220	1				
13-221A		HOSE,AIR			
N3A1-13-221A	1				
13-247		JOINT,RUBBER			
N3A3-13-247	1				
13-248		JOINT,RUBBER			
N3A1-13-247	2				
13-302		BOLT,AIR CLEANER			
F201-13-302A	2				
13-310		BRACKET,AIR CLEANER			
N3A1-20-200	1				
13-320		HOUSING,AIR CLEANER			
N3A1-13-320	1				
13-347C		JOINT,RUBBER			
N3A1-13-249	1				
13-735A		CLAMP,HOSE			
NF01-13-735	7	(ILLUST. NO.1)			
N3A1-13-735	2	(ILLUST. NO.2)			
13-751E		HOSE,AIR			
N3C1-13-751	1				

CAT. AUFA05-03

1995-03

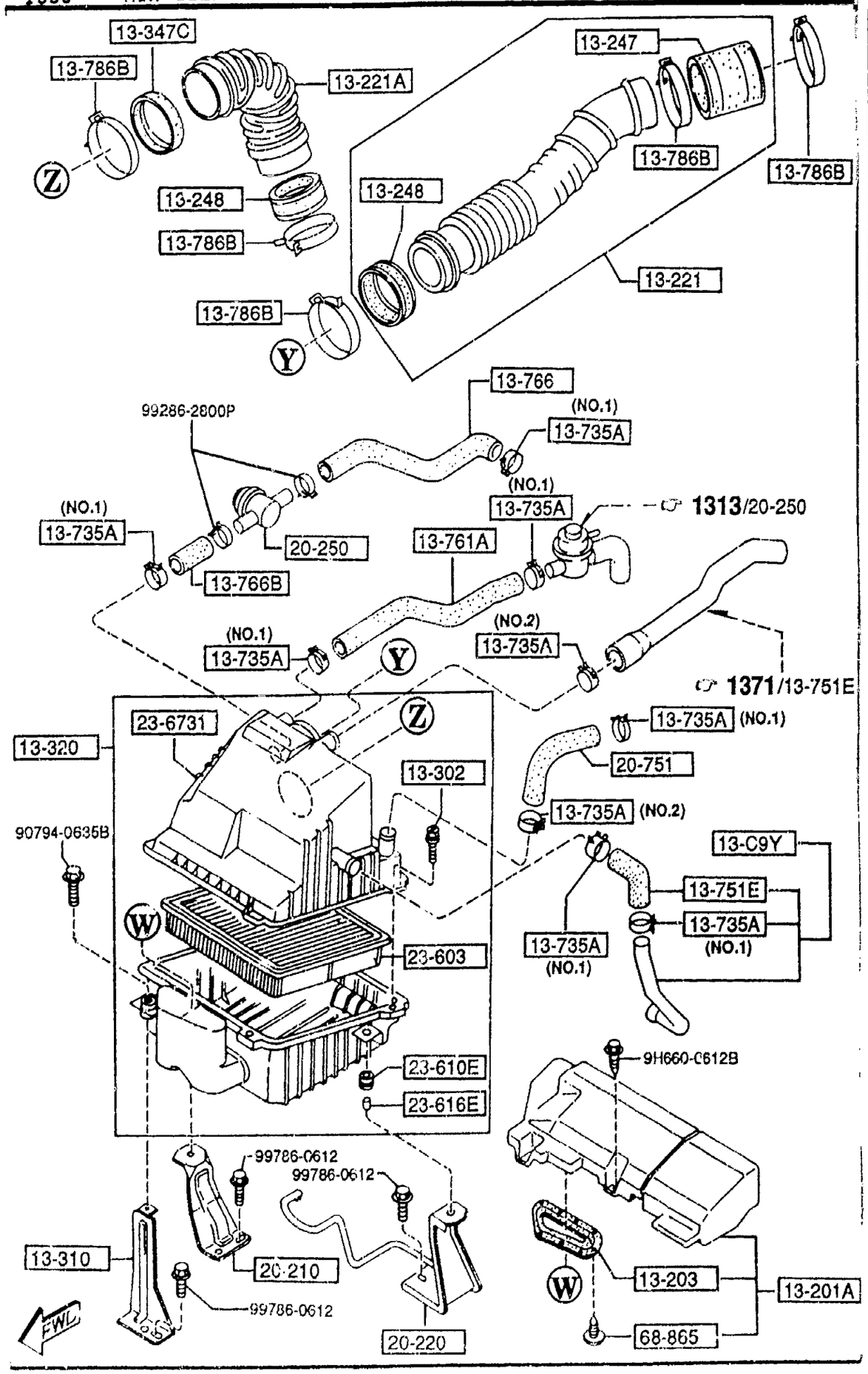

AUFA05

PART NO.	QTY	MODEL/RESTRICTION	MODEL/RESTRICTION	MODEL/RESTRICTION	FROM-TO
13-761A N3A2-13-768	1	HOSE,AIR			
13-766 N3A1-13-766	1	HOSE,AIR			
13-766B N3A1-13-767	1	HOSE,AIR			
13-786B N3A3-13-786	5	CLIP,HOSE			
20-210 N3A1-20-210	1	BRACKET,AIR CLEANER			
20-220 N3A2-20-220	1	BRACKET,AIR CLEANER			
20-250 N3A1-20-250	1	VALVE,AIR BYPASS			
20-751 N3A1-20-751	1	HOSE,AIR			
23-603 N3A1-13-Z40	1	ELEMENT,AIR CLEANER			
23-610E HE19-23-610	3	INSULATOR			
23-616E HE19-23-616	3	PIPE			
23-6731 N3A1-13-701	1	COVER,AIR CLEANER			
68-865 BR70-68-865	5	FASTENER			

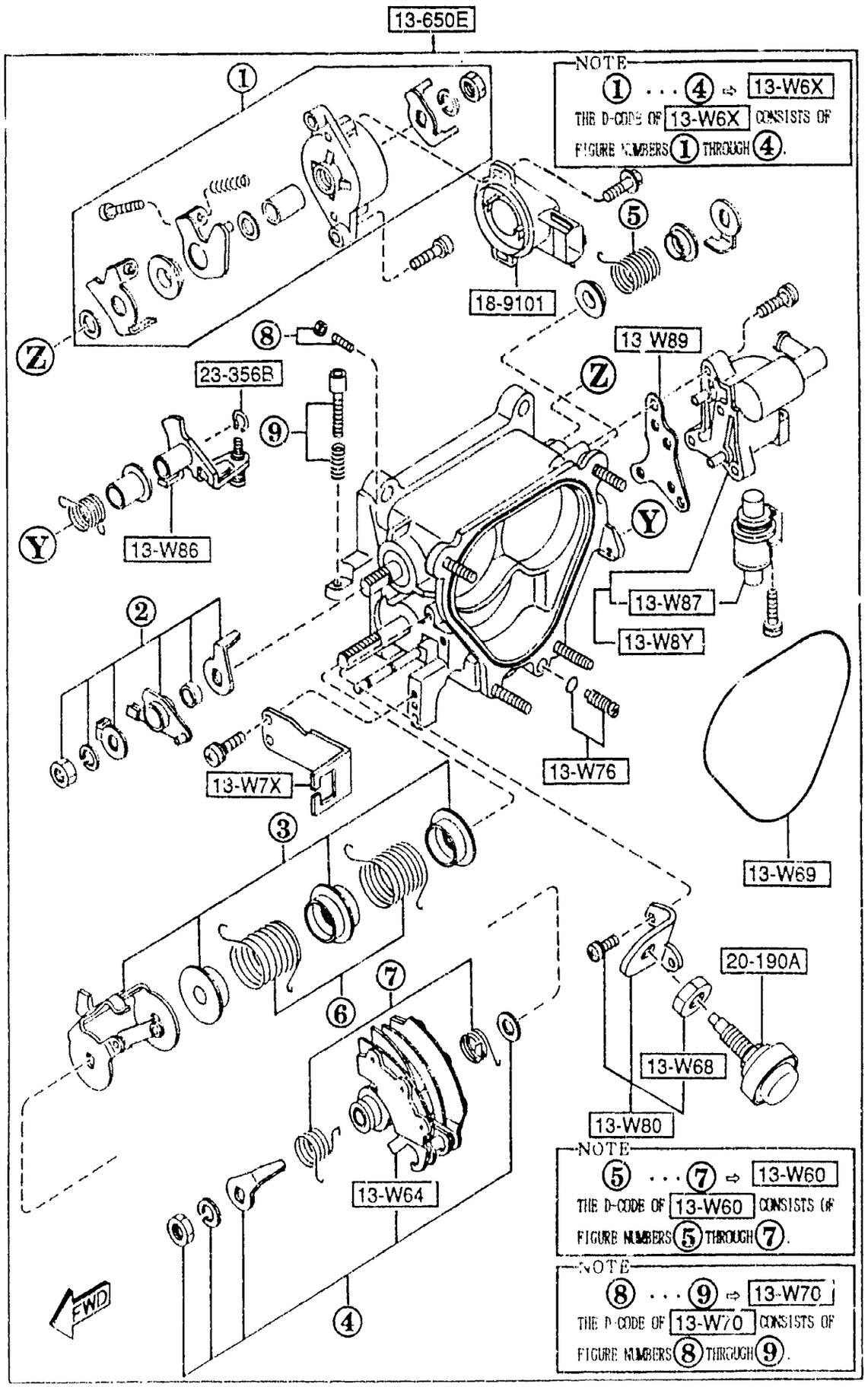

PART NO.	QTY	MODEL/RESTRICTION	MODEL/RESTRICTION	MODEL/RESTRICTION	FROM-TO
13-W6X		LEVER SET,THROTTLE BODY			
N3A1-13-W6X	1	(MT)			
N3A2-13-W6X	1	(AT)			
13-W60		SPRING SET,THROTTLE BODY			
N3A1-13-W60	1	(MT)			
N3A2-13-W60	1	(AT)			
13-W64		LEVER,THROTTLE			
N3A1-13-W64	1	(MT)			
N3A2-13-W64	1	(AT)			
13-W68		NUT			
N3A1-13-W68	1				
13-W69		RING,'O'			
N390-13-W69	1				
13-W7X		HOLDER SET,THROTTLE BODY			
N3A1-13-W7X	1				
13-W70		SCREW SET,THROTTLE BODY			
N3A1-13-W70	1				
13-W76		SCREW,ID.ADJUST-TH. BODY			
N3A1-13-W76	1				
13-W8Y		HOUSING,WAX			
N3A1-13-W8Y	1				
13-W80		BRKT SET,DASH POT-THROT			
N3A1-13-W80	1				
13-W86		CAM,FIRST IDLE			
N3A1-13-W86	1				
13-W87		WAX,THERMO			
N3A1-13-W87	1				
13-W89		GASKET,THERMO			

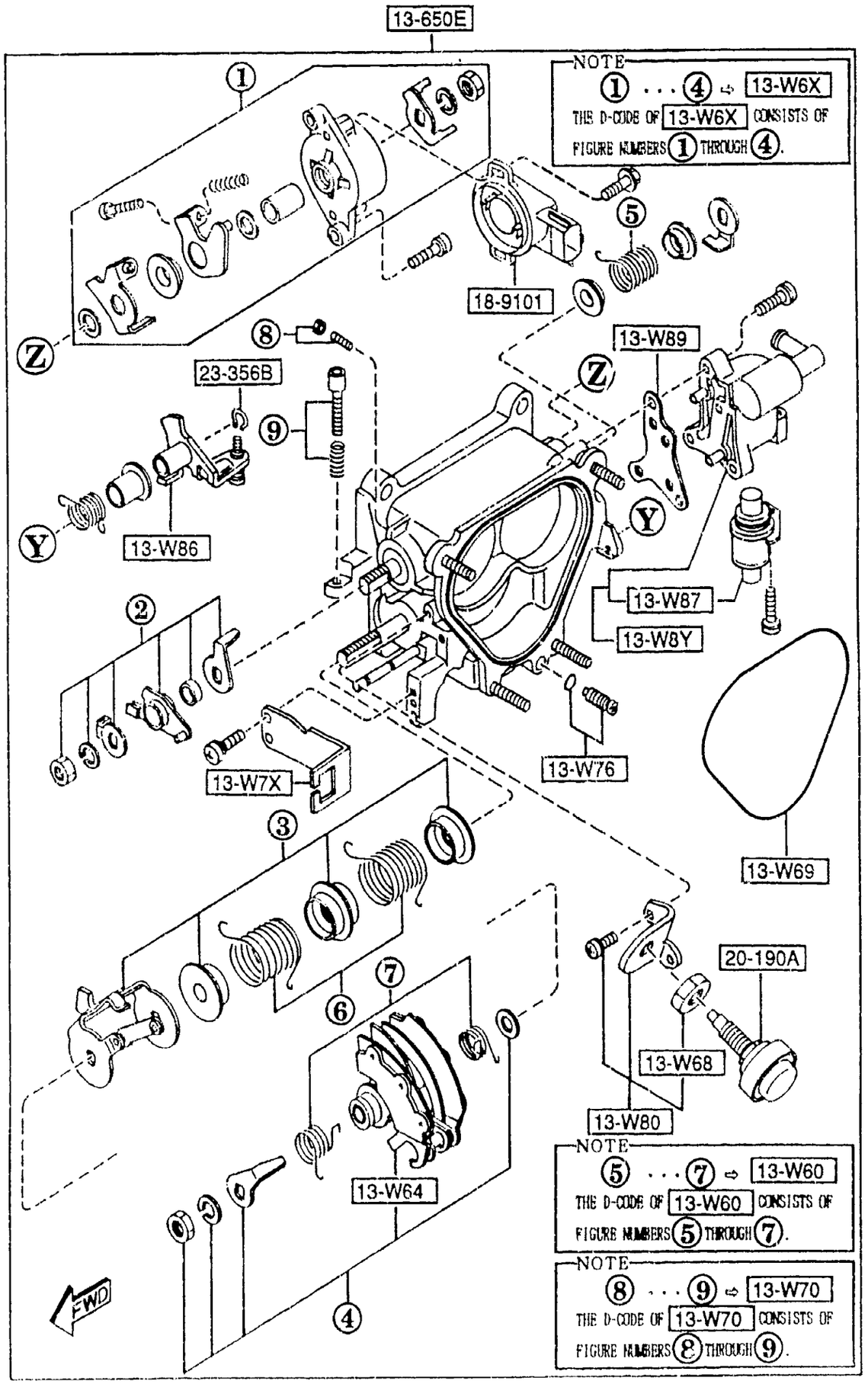

PART NO.	QTY	MODEL/RESTRICTION	MODEL/RESTRICTION	MODEL/RESTRICTION	FROM-TO
CONT'D					
N3A1-13-W89	1				
+---------+					
| 13-650E |		BODY,THROTTLE			
+---------+					
N3A1-13-640	1	(MT)			
N3A2-13-640	1	(AT)			
+---------+					
| 18-9101 |		SENSOR,THROTTLE POSI TION			
+---------+					
N3A1-18-911	1	(MT)			
N3A2-18-911	1	(AT)			
+---------+					
| 20-190A |		DASH POT			
+---------+					
N3A1-20-190	1				-3830
N350-20-190	1				3830-
+---------+					
| 23-356B |		RING,STOP			
+---------+					
N236-23-356	1				

3830 FD333*-300373

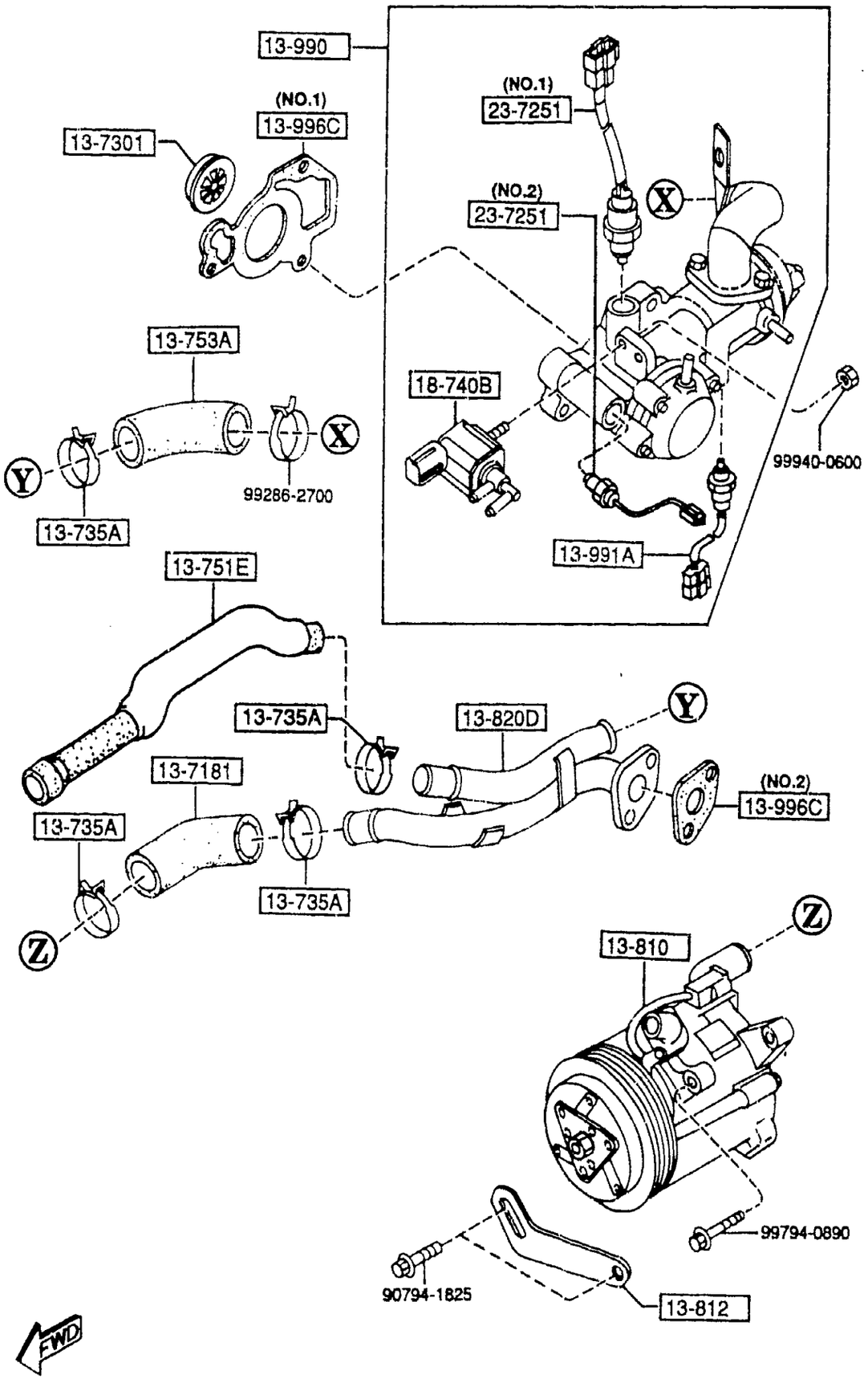

PART NO.	QTY	MODEL/RESTRICTION	MODEL/RESTRICTION	MODEL/RESTRICTION	FROM-TO
13-7181		HOSE,AIR			
N3A3-20-752	1				
13-7301		VALVE,CHECK			
1480-13-730	1				
13-735A		CLAMP,HOSE			
NF01-13-735	4				
13-751E		HOSE,AIR			
N3A3-13-754A	1				
13-753A		HOSE,AIR			
N3A3-13-753	1				
13-810		PUMP,AIR			
N3A3-13-810	1	(MT)			
N3A4-13-810	1	(AT)			
13-812		STRAP,AIR PUMP			
N3A1-13-812	1				
13-820D		PIPE,AIR			
N3A3-13-820A	1				
13-990		VALVE,AIR CONTROL			
N3A3-13-990	1	(MT)			
N3A4-13-990	1	(AT)			
13-991A		VALVE,SOLENOID-A.C. VALVE			
N3A1-13-991	1				
13-996C		GASKET,A.C.V.			
N3A3-13-996	1	(ILLUST. NO.1)			
N3A4-13-996	1	(ILLUST. NO.2)			
18-740B		VALVE,SOLENOID			
N3A1-18-741	1				
23-7251		VALVE,SOLENOID			

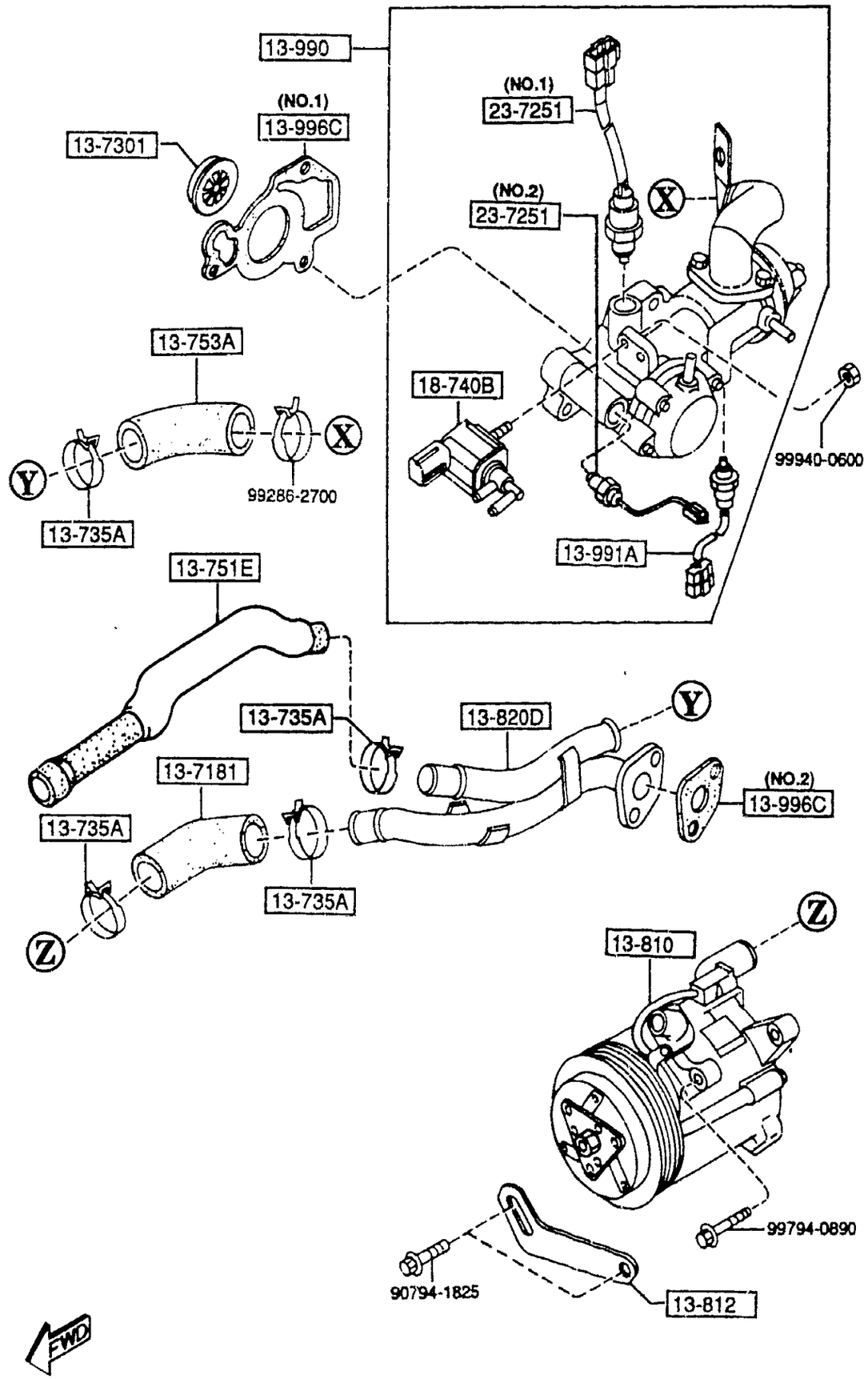

PART NO.	QTY	MODEL/RESTRICTION	MODEL/RESTRICTION	MODEL/RESTRICTION	FROM-TO
CONT'D					
N250-20-725	1	(ILLUST. NO.1)			
N304-20-725	1	(ILLUST. NO.2)			

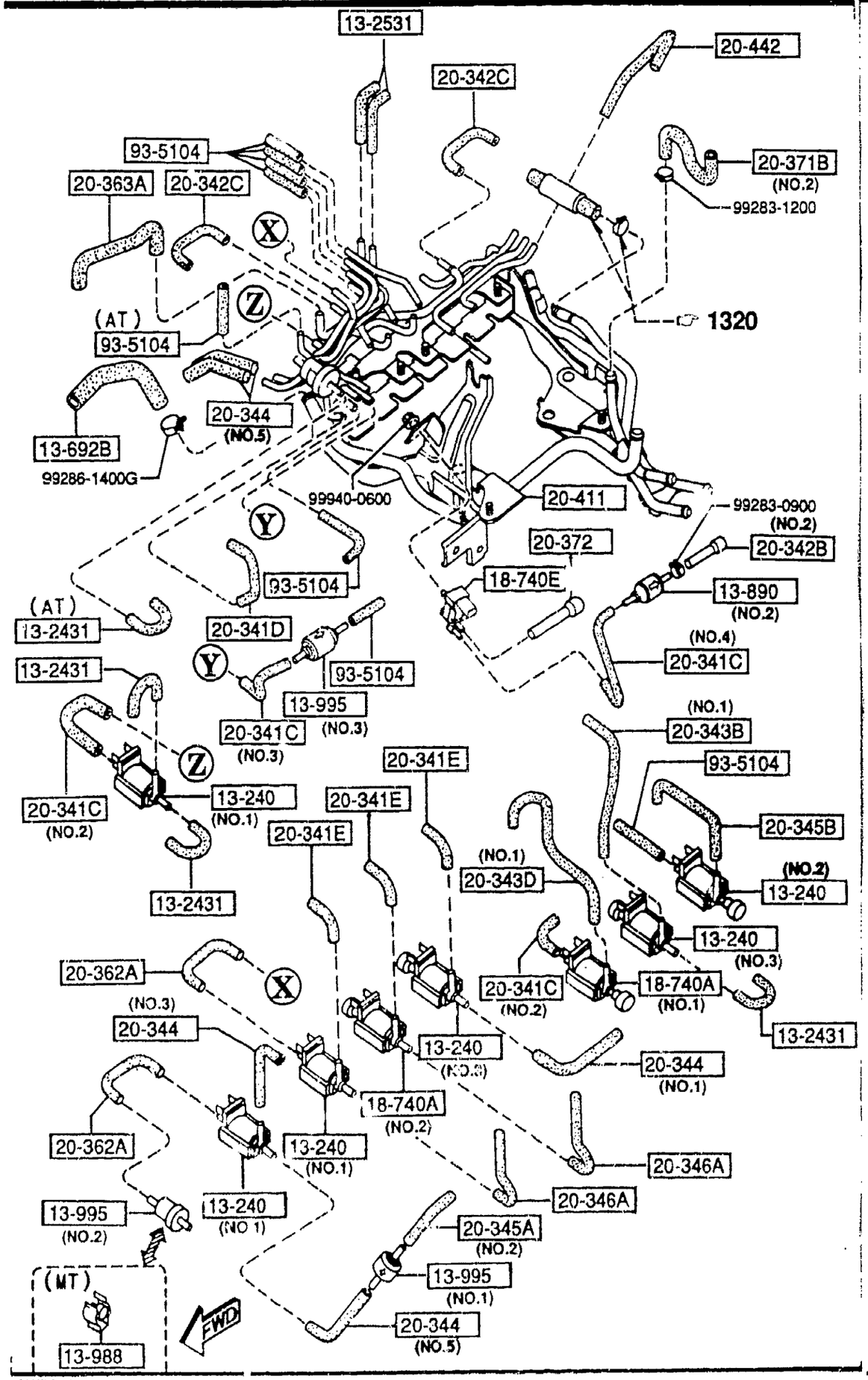

AUFA05

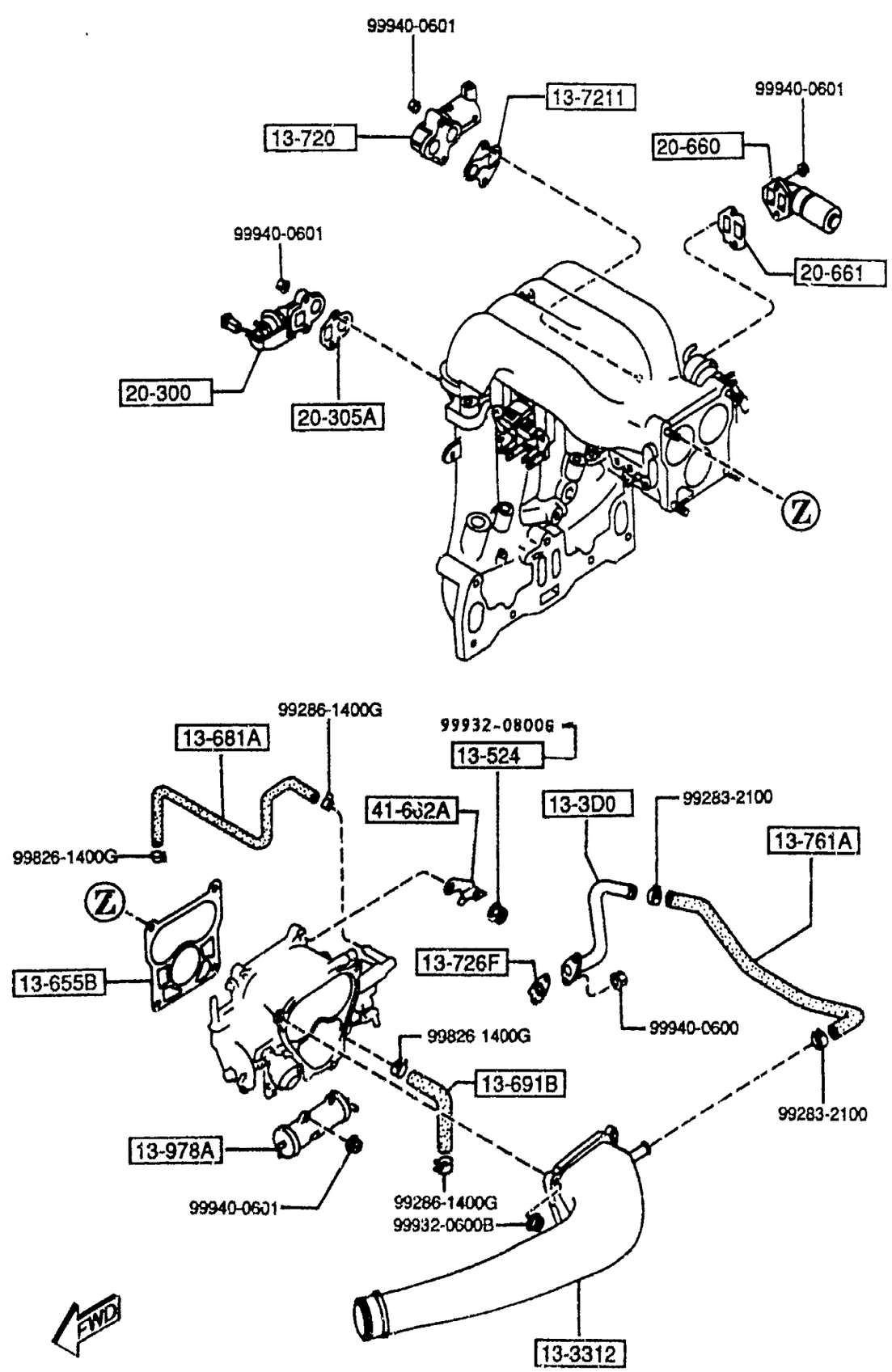

AUFA05

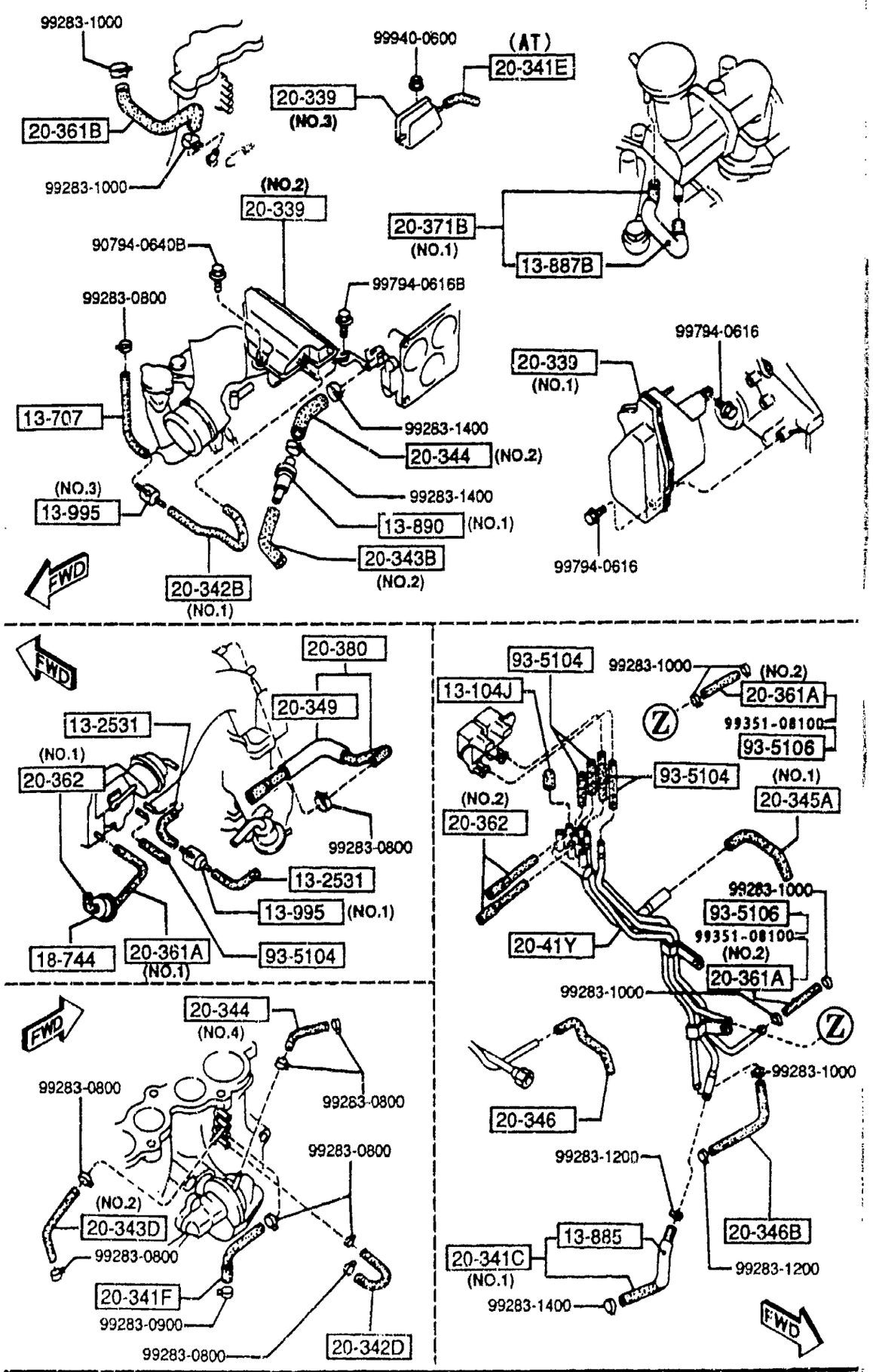
99283-1000
20-361B
99283-1000
99940-0600
(AT)
20-341E
20-339
(NO.3)
(NO.2)
20-339
90794-0640B
99283-0800
99794-0616B
20-371B
(NO.1)
13-887B
13-707
99283-1400
20-344
(NO.2)
99283-1400
13-890
(NO.1)
(NO.3)
13-995
20-343B
(NO.2)
20-342B
(NO.1)
FWD
20-339
(NO.1)
99794-0616
99794-0616
FWD
20-380
20-349
13-2531
(NO.1)
20-362
99283-0800
13-2531
13-995
(NO.1)
18-744
20-361A
(NO.1)
93-5104
FWD
20-344
(NO.4)
99283-0800
99283-0800
99283-0800
(NO.2)
20-343D
99283-0800
20-341F
99283-0900
99283-0800
20-342D
93-5104
99283-1000
(NO.2)
13-104J
20-361A
99351-08100
93-5106
93-5104
(NO.1)
20-345A
(NO.2)
20-362
99283-1000
93-5106
99351-08100
(NO.2)
20-41Y
20-361A
99283-1000
99283-1000
20-346
99283-1200
20-346B
13-885
20-341C
(NO.1)
99283-1200
99283-1400
FWD

AUFA05

1380 EMISSION CONTROL SYSTEM (1/3)

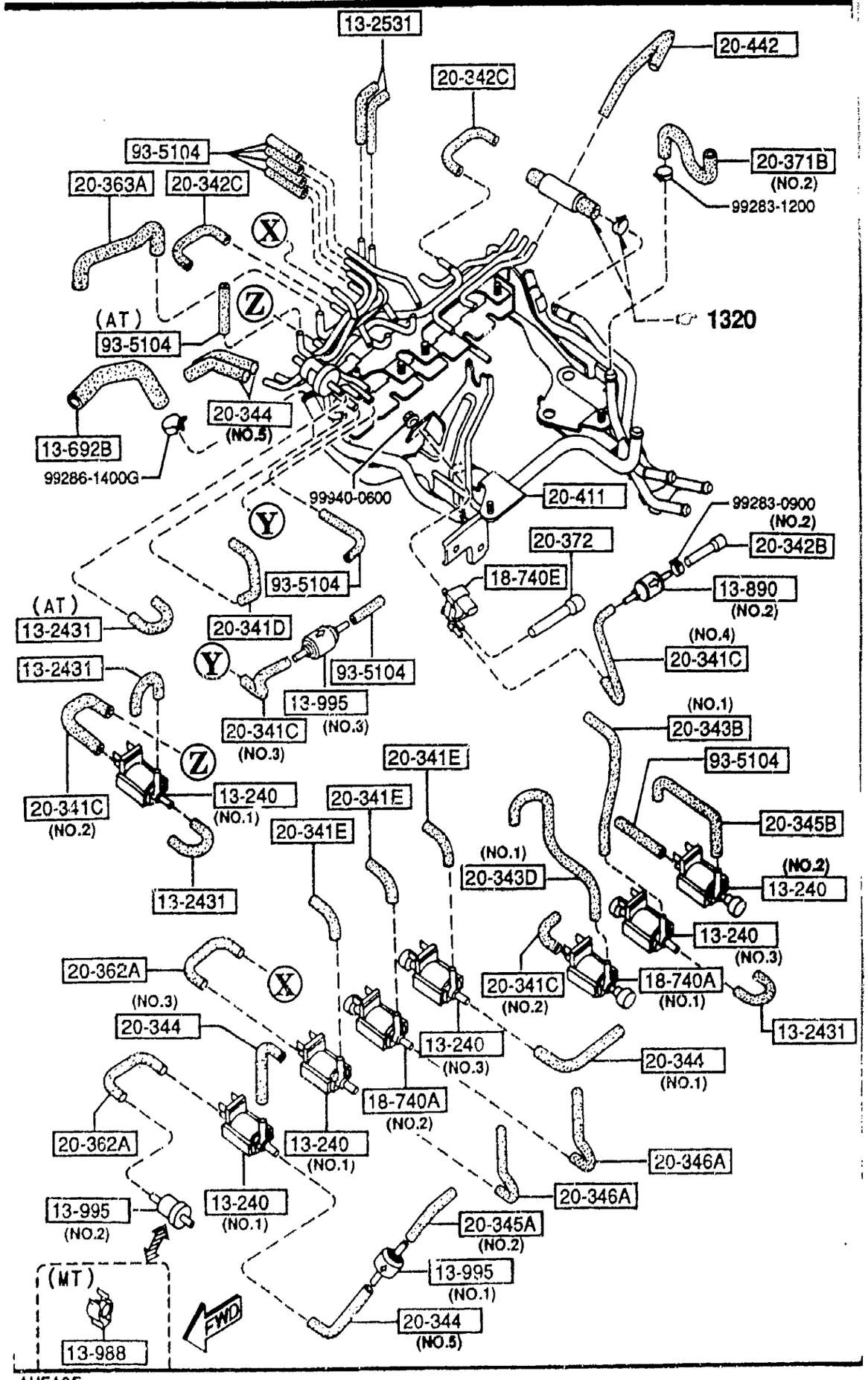

AUFA05

PART NO.	QTY	MODEL/RESTRICTION	MODEL/RESTRICTION	MODEL/RESTRICTION	FROM-TO
13-104J		CAP,BLIND			
1010-13-104	1	(MT)			
13-240		VALVE,3WAY			
1480-13-240A	3	(ILLUST. NO.1)			
1481-13-240A	1	(ILLUST. NO.2)			
1482-13-240A	2	(ILLUST. NO.3)			
13-2431		HOSE,VACUUM			
N318-20-341A	3	(MT)			
N318-20-341A	4	(AT)			
13-2531		HOSE,VACUUM			
N236-13-253A	4				
13-3D0		PIPE,AIR-B.A.C.V.&A.I.H.			
N3A1-13-3D0A	1				
13-3312		PIPE,AIR INTAKE			
N3C1-13-330	1				
13-524		NUT			
NF01-13-524	4				-3901
13-655B		GASKET,THROTTLE BODY			
N3A1-13-655	1				
13-681A		HOSE,WATER			
N3A1-13-681	1				
13-691B		HOSE,WATER			
N3A1-13-691	1				
13-692B		HOSE,WATER			
N3A1-13-692A	1				
13-707		HOSE,AIR			
N35C-13-B96	1				
13-720		VALVE,SOL.-AIR BLEED EXTE			

3901 FD333*-300438

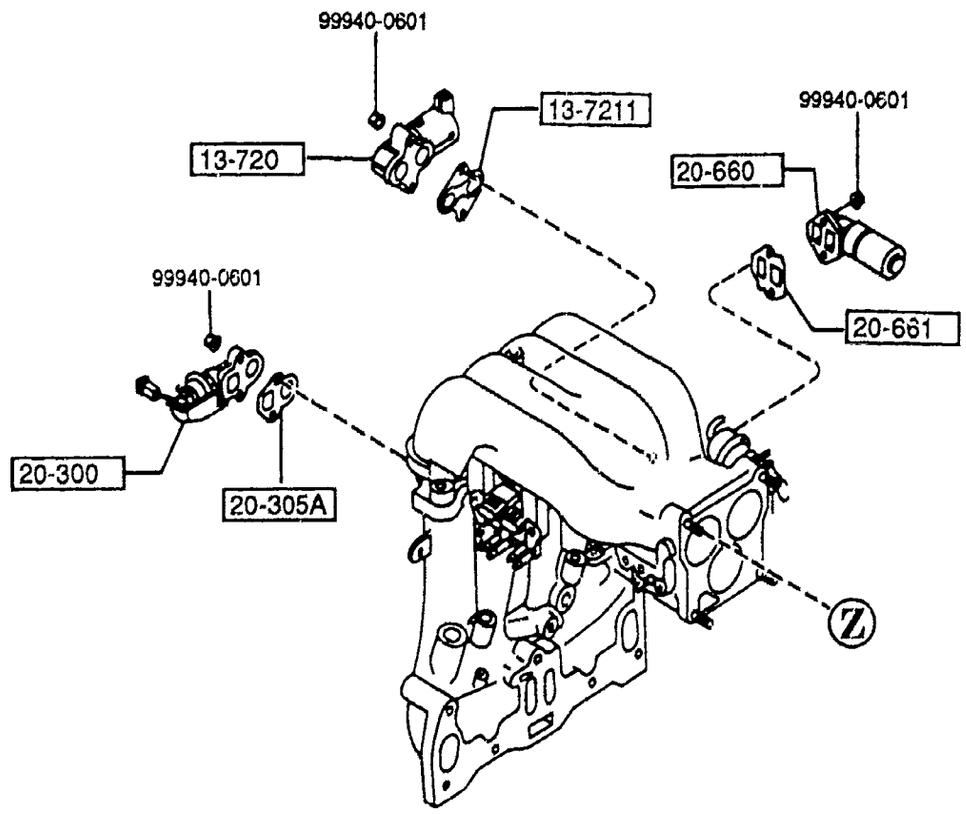

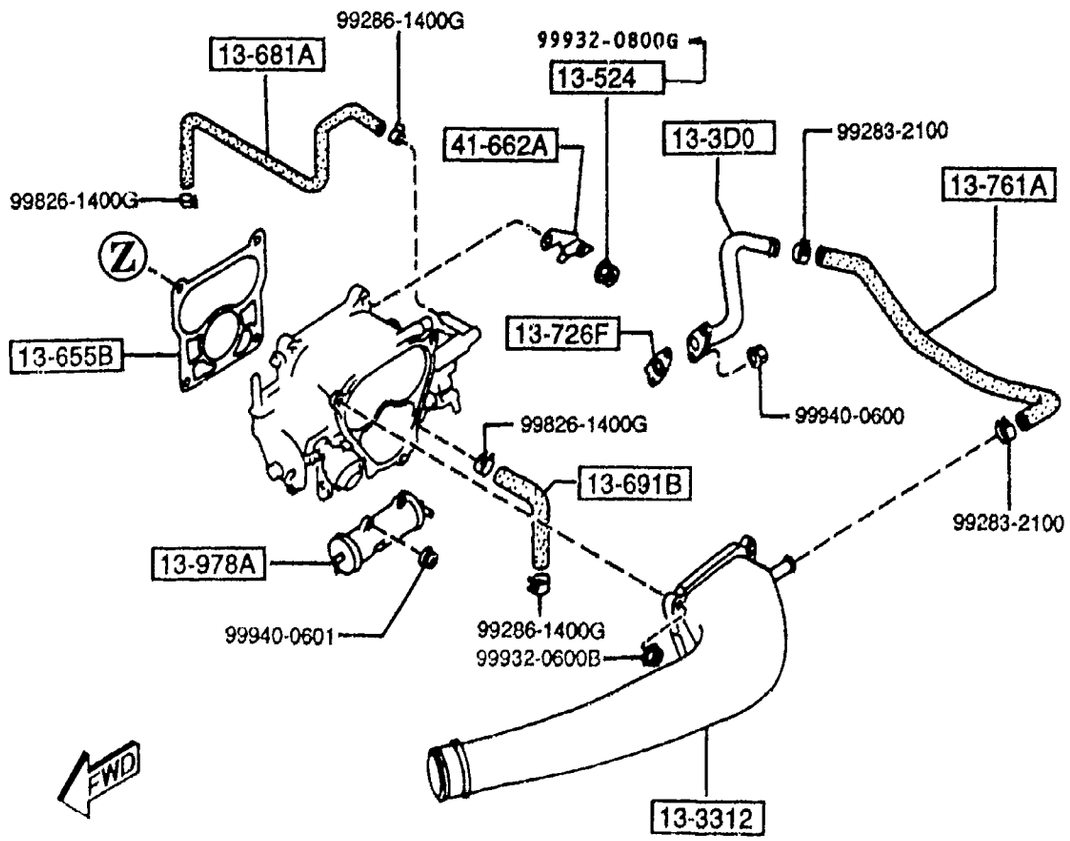

PART NO.	QTY	MODEL/RESTRICTION	MODEL/RESTRICTION	MODEL/RESTRICTION	FROM-TO
CONT'D					
N3A1-13-720	1				
+---------+					
| 13-7211 |		GASKET			
+---------+					
N3A1-13-721	1				
+---------+					
| 13-726F |		GASKET,SOLENOID VALVE			
+---------+					
N3A1-13-726	1				
+---------+					
| 13-761A |		HOSE,AIR			
+---------+					
N3A1-13-761A	1				
+---------+					
| 13-885 |		PROTECTOR,SPONGE			
+---------+					
N3A3-13-885	1				
+---------+					
| 13-887B |		PROTECTOR,SPONGE			
+---------+					
N3A2-13-887A	1				-3901
+---------+					
| 13-890 |		VALVE,P.C.V.			
+---------+					
NF01-13-890	1	(ILLUST. NO.1)			
N3A1-13-890	1	(ILLUST. NO.2)			
+---------+					
| 13-978A |		TANK,CATCH			
+---------+					
N3A1-13-978	1				
+---------+					
| 13-988 |		FILTER,AIR			
+---------+					
NF01-13-988A	1	(MT)			
+---------+					
| 13-995 |		VALVE,CHECK			
+---------+					
HE41-13-995	2	(ILLUST. NO.1)			
N3A1-13-995	1	(ILLUST. NO.2) (AT)			
N390-13-995A	2	(ILLUST. NO.3)			
+---------+					
| 18-740A |		VALVE,SOLENOID			
+---------+					
N3A7-18-741	1	(ILLUST. NO.1)			
N390-18-741	1	(ILLUST. NO.2)			
+---------+					
| 18-740E |		VALVE,SOLENOID			
+---------+					
F285-18-741	1	MITSUBISHI			

3901 FD333*-300438

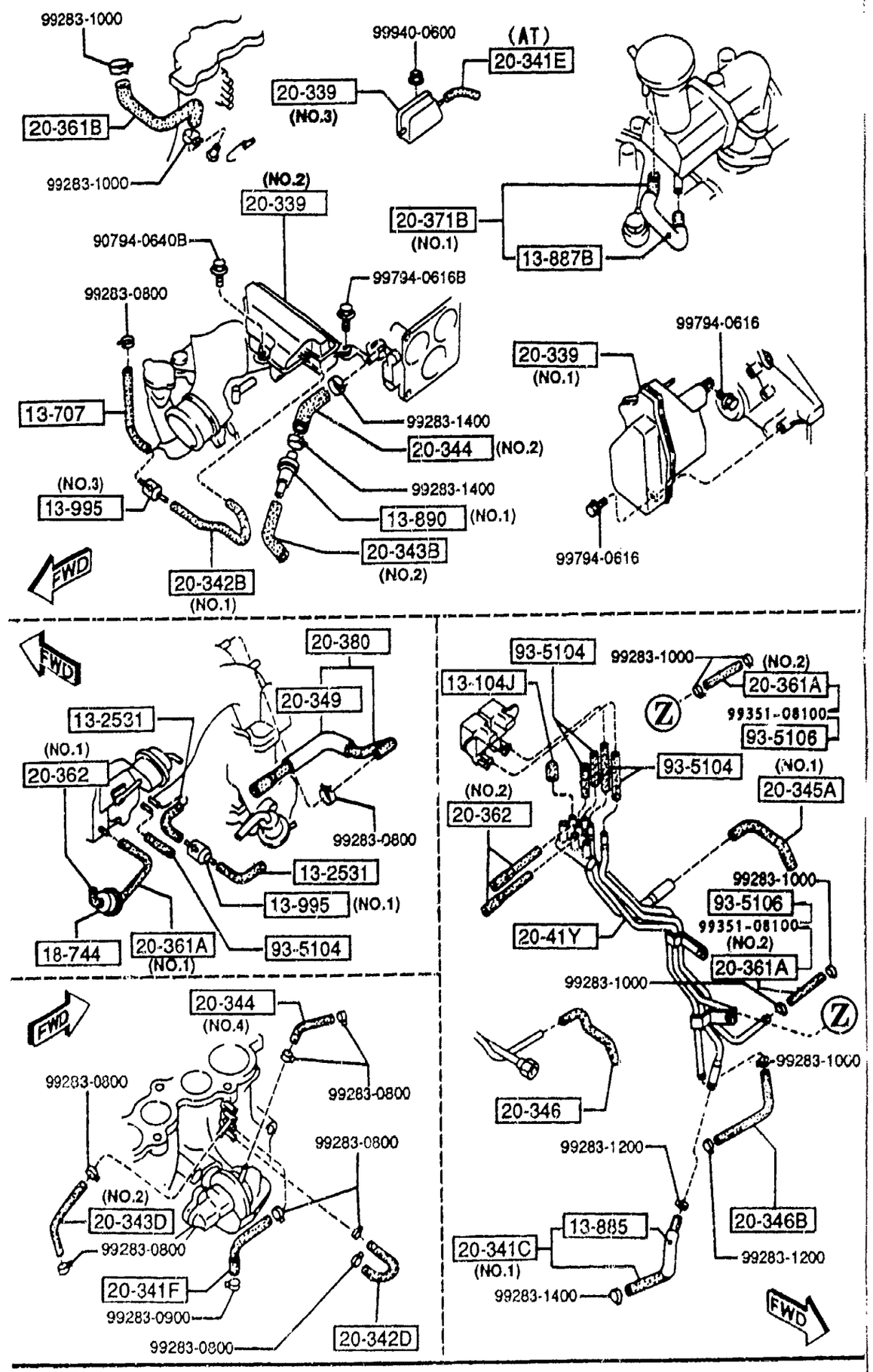

AUFA05

PART NO.	QTY	MODEL/RESTRICTION	MODEL/RESTRICTION	MODEL/RESTRICTION	FROM-TO
18-744		FILTER,AIR			
S5A1-18-744	1				
20-300		VALVE,E.G.R.			
N3A3-20-300	1				
20-305A		GASKET,E.G.R. VALVE			
N3A1-20-305A	1				
20-339		CHAMBER,VACUUM			
N3C1-20-339	1	(ILLUST. NO.1)			
N3C2-20-339	1	(ILLUST. NO.2)			
N3C3-20-339	1	(ILLUST. NO.3) (AT)			
20-341C		TUBE,VACUUM			
N3A3-20-340	1	(ILLUST. NO.1)			
NF01-20-341	2	(ILLUST. NO.2)			
N3A4-20-341	1	(ILLUST. NO.3)			
N3A5-20-341	1	(ILLUST. NO.4)			
20-341D		TUBE,VACUUM			
N3A1-20-341	1				
20-341E		TUBE,VACUUM			
N3A2-20-341A	3	(MT)			
N3A2-20-341A	4	(AT)			
20-341F		TUBE,VACUUM			
N3A3-20-341A	1				
20-342B		TUBE,VACUUM			
N3A1-20-342	1	(ILLUST. NO.1)			
N3A5-20-342	1	(ILLUST. NO.2)			
20-342C		TUBE,VACUUM			
N3A2-20-342	2				
20-342D		TUBE,VACUUM			
N3A3-20-342	1				

1380 EMISSION CONTROL SYSTEM (1/3)

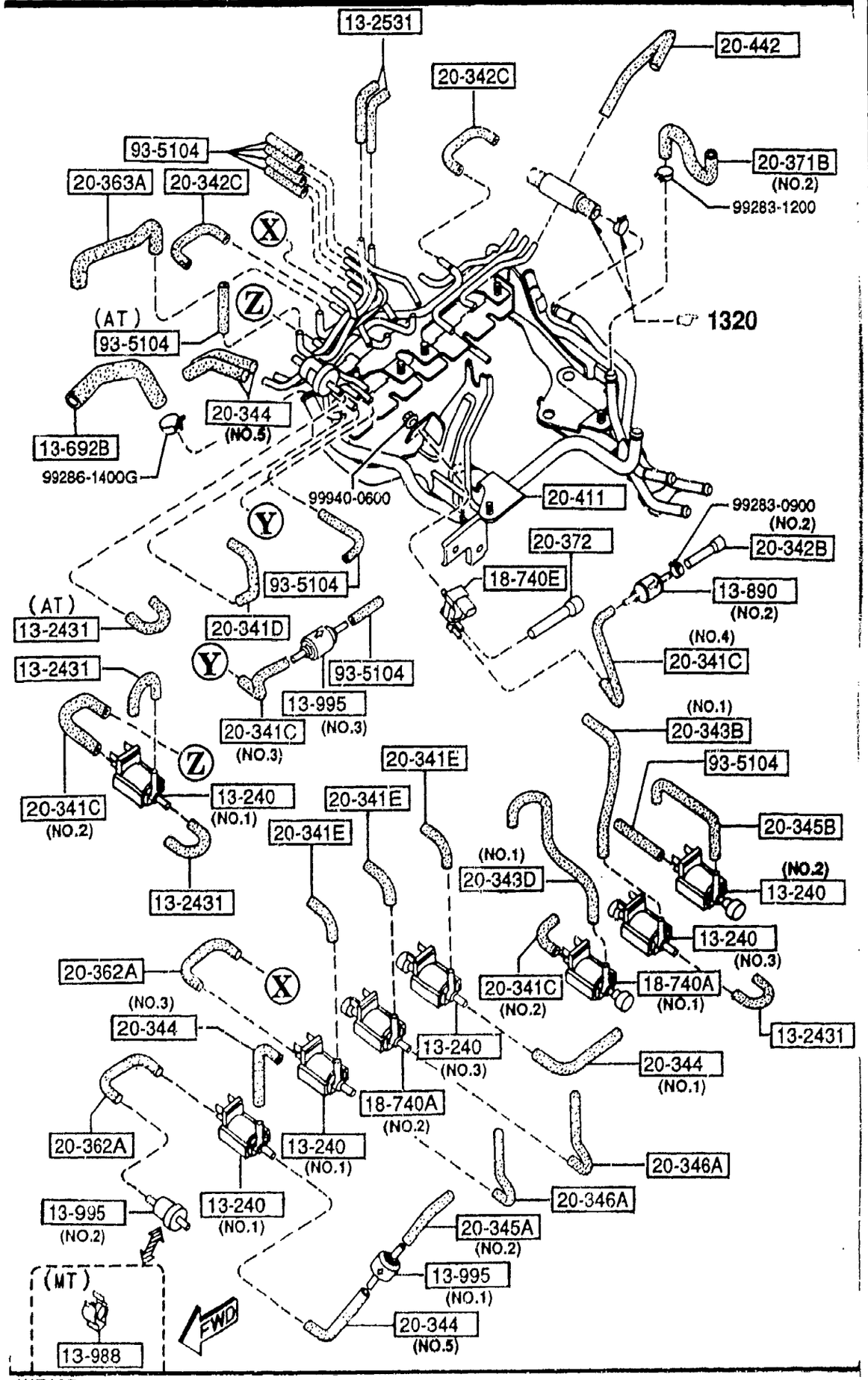

AUFA05

PART NO.	QTY	MODEL/RESTRICTION	MODEL/RESTRICTION	MODEL/RESTRICTION	FROM-TO
20-343B		TUBE,VACUUM			
N3A1-20-343A	1	(ILLUST. NO.1)			
N3A4-20-343	1	(ILLUST. NO.2)			
20-343D		TUBE,VACUUM			
N3A2-20-343B	1	(ILLUST. NO.1)			
N3A3-20-343A	1	(ILLUST. NO.2)			
20-344		TUBE,VACUUM			
FE4J-20-344	1	(ILLUST. NO.1)			
N3A1-20-344A	1	(ILLUST. NO.2)			
N3A2-20-344A	1	(ILLUST. NO.3) (AT)			
N3A3-20-344	1	(ILLUST. NO.4)			
N3A4-20-344	3	(ILLUST. NO.5)			
20-345A		TUBE,VACUUM			
N3A1-20-345	1	(ILLUST. NO.1)			
N3A4-20-345	1	(ILLUST. NO.2)			
20-345B		TUBE,VACUUM			
N3A2-20-345A	1				
20-346		TUBE,VACUUM			
N3A1-20-346	1				
20-346A		TUBE,VACUUM			
N3A2-20-346	2				
20-346B		TUBE,VACUUM			
N3A3-20-346A	1				
20-349		PROTECTOR,VACUUM PIPE			
N3A1-20-348	1				
20-361A		TUBE,VACUUM			
N3A1-20-361A	1	(ILLUST. NO.1)			
N3A4-20-361	2	(ILLUST. NO.2)			-3B15

3B15 FD333*-301312

1380 EMISSION CONTROL SYSTEM (2/3)

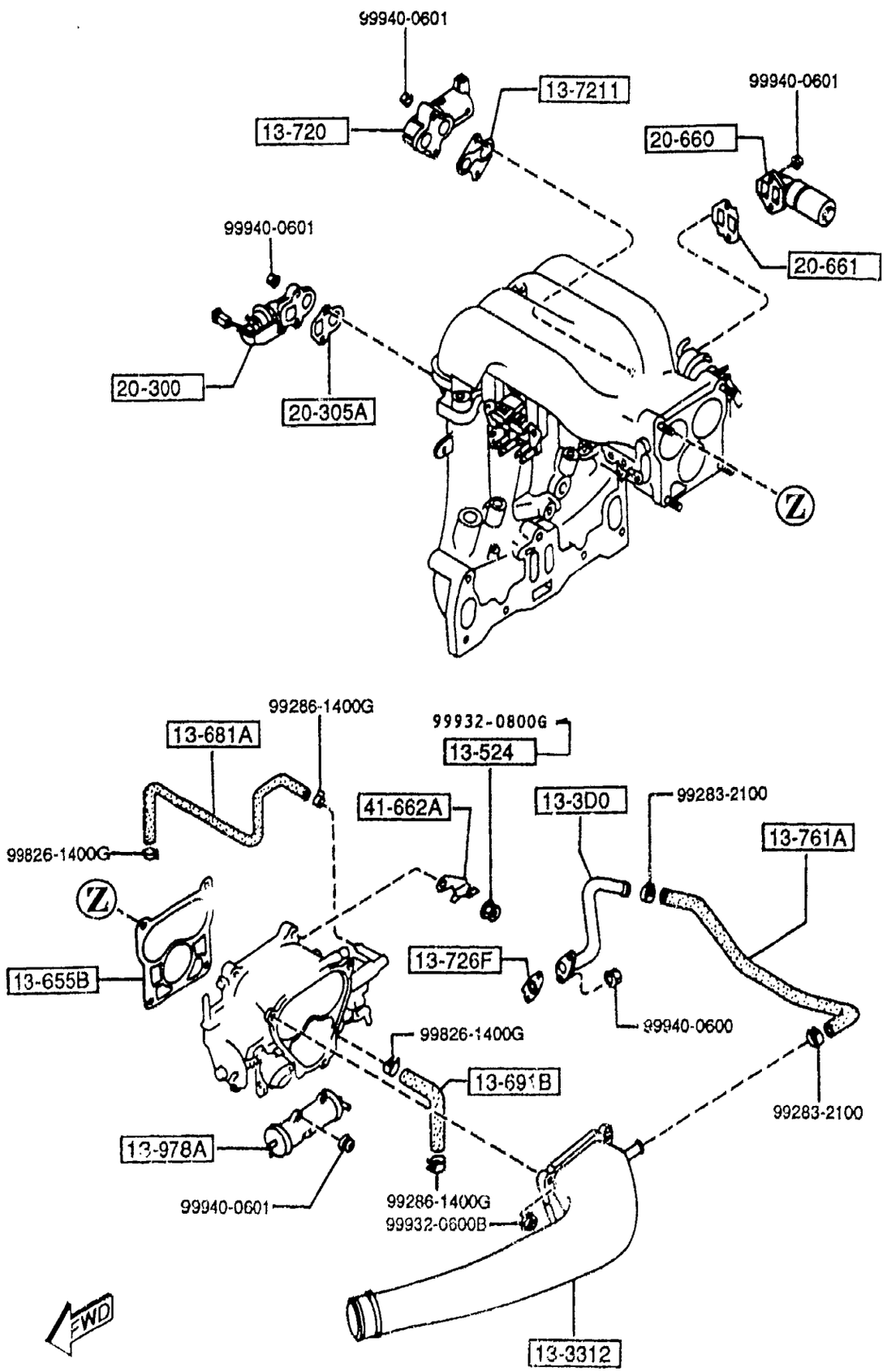

PART NO.	QTY	MODEL/RESTRICTION	MODEL/RESTRICTION	MODEL/RESTRICTION	FROM-TO
20-361B		TUBE,VACUUM			
N3A2-20-361A	1				
20-362		TUBE,VACUUM			
N3A1-20-362	1	(ILLUST. NO.1)			
N3A4-20-362	2	(ILLUST. NO.2)			
20-362A		TUBE,VACUUM			
N3A2-20-362	2				
20-363A		TUBE,VACUUM			
N3A2-20-363	1				
20-371B		TUBE,VACUUM			
N3A1-20-371	1	(ILLUST. NO.2)			
N3A2-20-370A	1	(ILLUST. NO.1)			-3901
N3A2-20-371A	1	(ILLUST. NO.1)			3901-
20-372		TUBE,VACUUM			
N3A1-20-372A	1				
20-380		TUBE,VACUUM			
N3A1-20-380	1				
20-41Y		PIPE,AIR-VALVE ACTUATOR			
N3A1-20-41YA	1				
20-411		PIPE,VACUUM			
N3A1-20-410C	1				
20-442		TUBE,VACUUM			
J501-20-442	1				
20-660		VALVE,IDLE AIR CONTROL			
N3A1-20-660	1				
20-661		GASKET,B.A.C. VALVE			
N3A1-20-661	1				
41-662A		BRACKET,ACCEL CABLE			

3901 FD333*-300438

1380 EMISSION CONTROL SYSTEM (3/3)

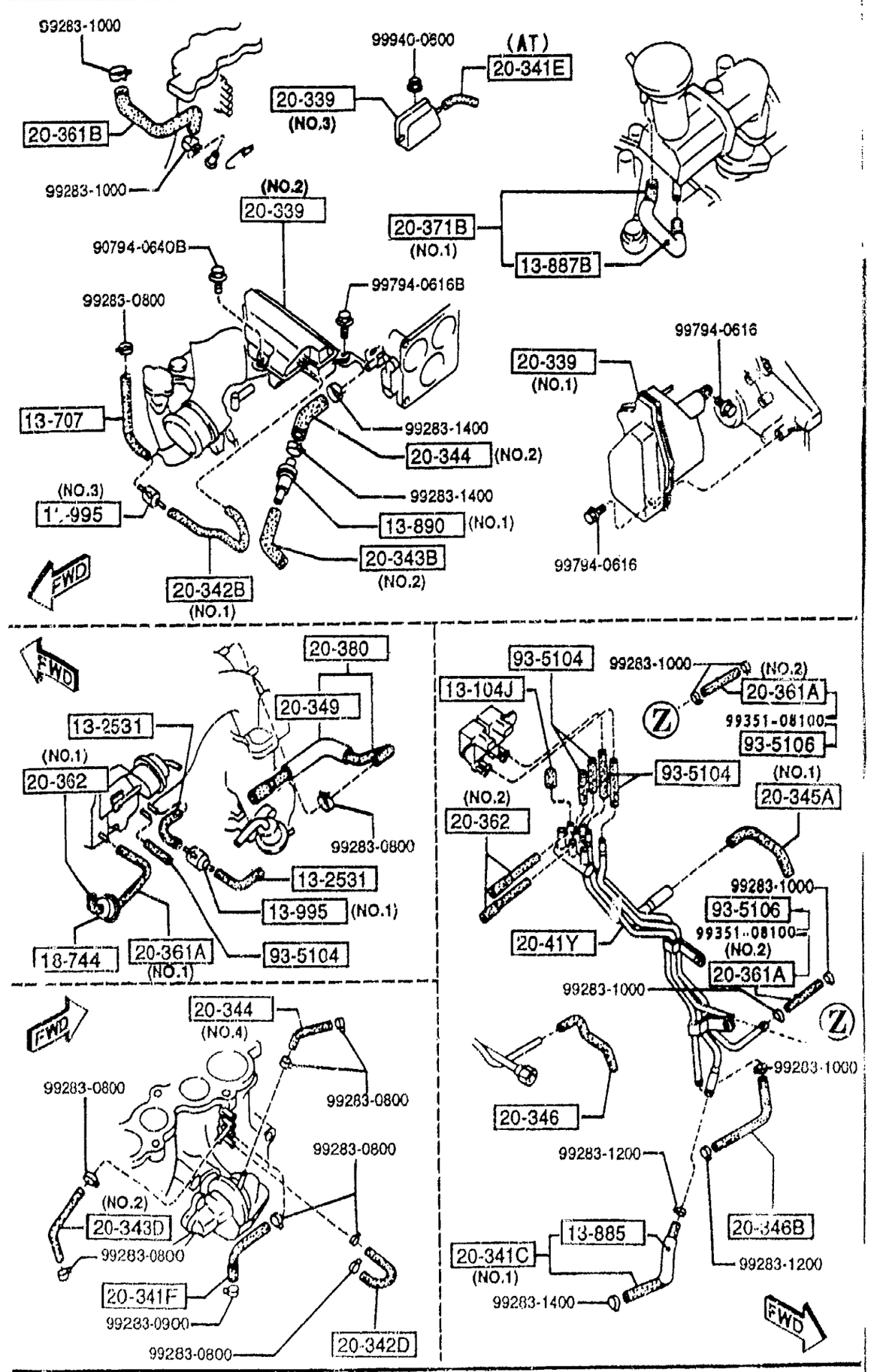

PART NO.	QTY	MODEL/RESTRICTION	MODEL/RESTRICTION	MODEL/RESTRICTION	FROM-TO
CONT'D					
FD01-41-662B	1				
+---------+					
| 93-5104 |		HOSE			
+---------+					
99351-04999	1				
+---------+					
| 93-5106 |		HOSE			
+---------+					
99351-06999	1				3B23-

3B23 FD333*-301403

1400 OIL PUMP & FILTER

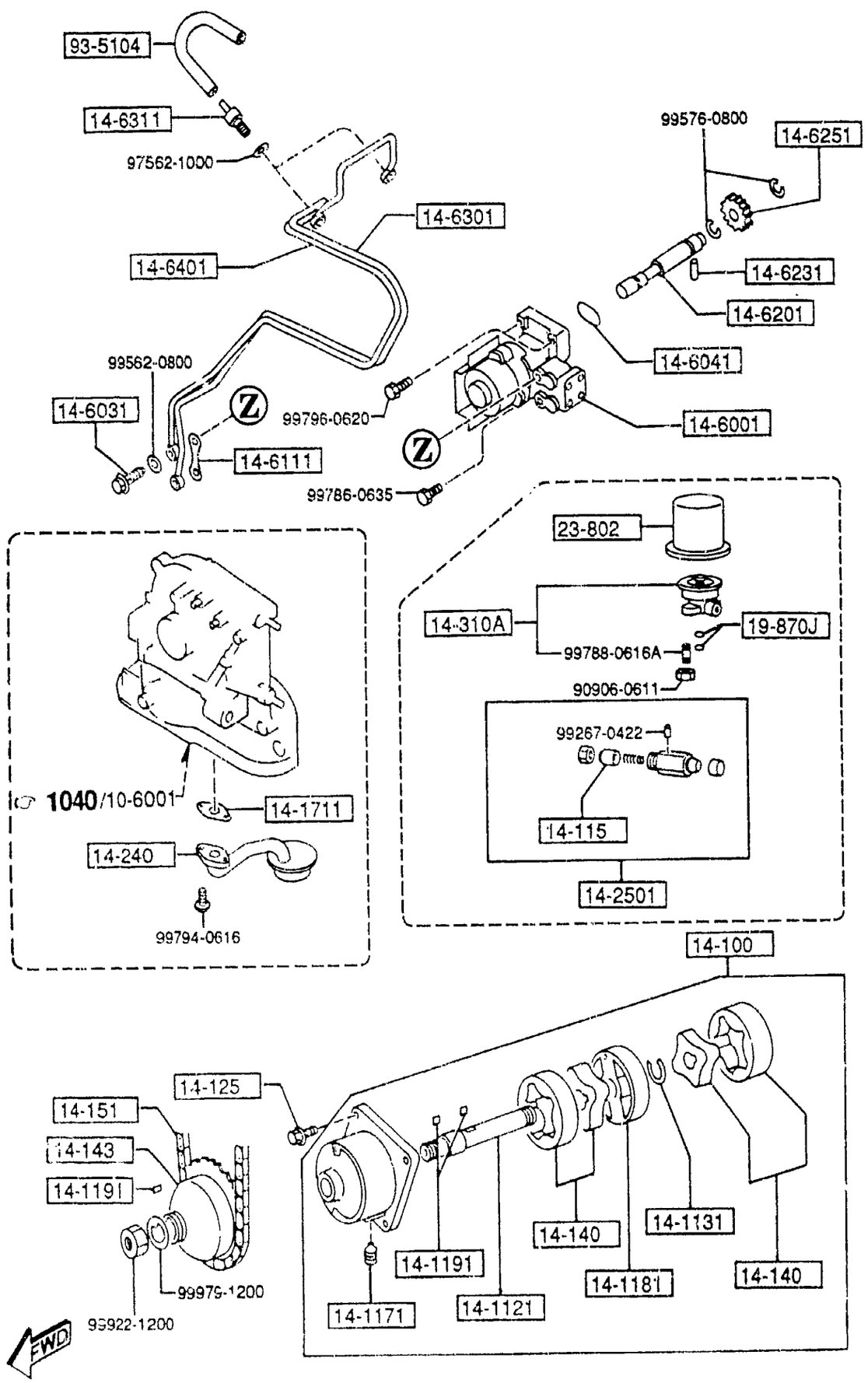

PART NO.	QTY	MODEL/RESTRICTION	MODEL/RESTRICTION	MODEL/RESTRICTION	FROM-TO
14-100		PUMP,OIL			
NF01-14-100	1				
14-1121		SHAFT,OIL PUMP			
N326-14-131	1				
14-1131		RING,SNAP			
0810-14-113	1				
14-115		PLUNGER,CONTROL			
0221-14-115	1				
14-1171		BOLT,LOCK			
N326-14-117	1				
14-1181		PLATE,MIDDLE			
NF01-14-135	1				
14-1191		KEY			
0839-14-119B	3				
14-125		BOLT,SET			
8553-14-125	4				
14-140		ROTOR			
N318-14-140	2				
14-143		WHEEL,SPROCKET			
N326-14-143	1				
14-151		CHAIN,OIL PUMP			
N326-14-151	1				
14-1711		GASKET,OIL STRAINER			
N386-14-248	1	NON ASBESTOS			
14-240		STRAINER,OIL			
N3A1-14-240A	1				
14-2501		REGULATOR,PRESSURE			

1400 OIL PUMP & FILTER

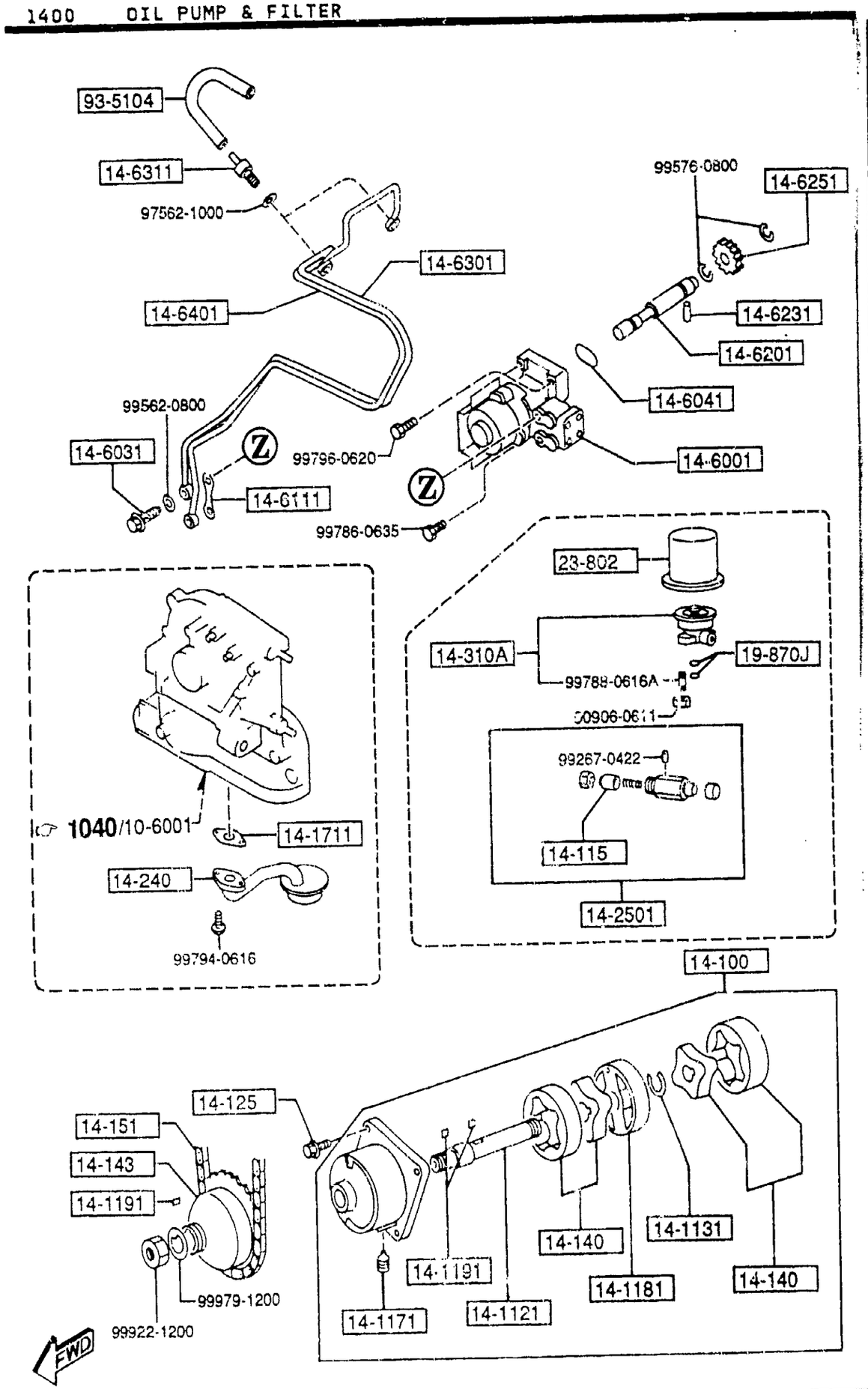

PART NO.	QTY	MODEL/RESTRICTION	MODEL/RESTRICTION	MODEL/RESTRICTION	FROM-TO
CONT'D					
N3A1-14-230	1				
14-310A		BODY,OIL FILTER			
N3A1-14-310A	1				
14-6001		PUMP,METERING OIL			
N3A2-14-600	1				
14-6031		BOLT,CONNECTOR			
N236-14-603B	2				
14-6041		RING,'O'			
N350-14-604	1				
14-6111		GASKET,METERING OIL			
N390-14-602	1				
14-6201		SHAFT,DRIVEN GEAR			
N350-14-620	1				
14-6231		PIN,DRIVEN GEAR			
0813-14-623	1				
14-6251		GEAR,DRIVEN			
0820-14-625A	1				
14-6301		TUBE,METERING OIL			
N3A1-14-660	1				-3A01
N3A1-14-660A	1				3A01-
14-6311		BOLT,CONNECTOR			
N318-14-631	2				
14-6401		TUBE,METERING OIL			
N3A1-14-670	1				-3A01
N3A1-14-670A	1				3A01-
19-870J		RING,'O'			
99541-01601	2				

3A01 FD333*- '88

1400 OIL PUMP & FILTER

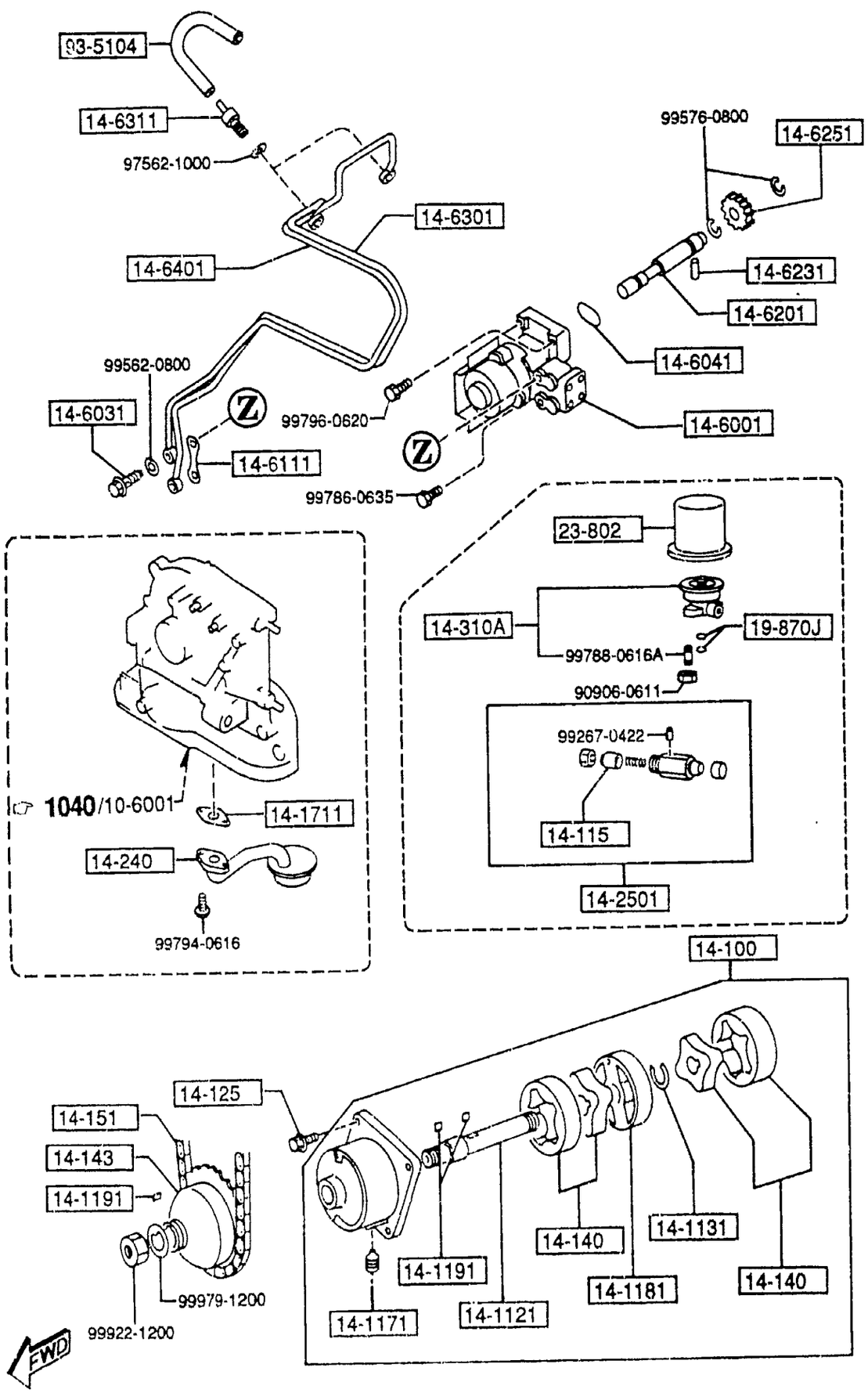

PART NO.	QTY	MODEL/RESTRICTION	MODEL/RESTRICTION	MODEL/RESTRICTION	FROM-TO
23-802		CARTRIDGE,OIL FILTER			
B6Y1-14-302	1	TOKYO ROKI			
93-5104		HOSE			
99351-04999	1				

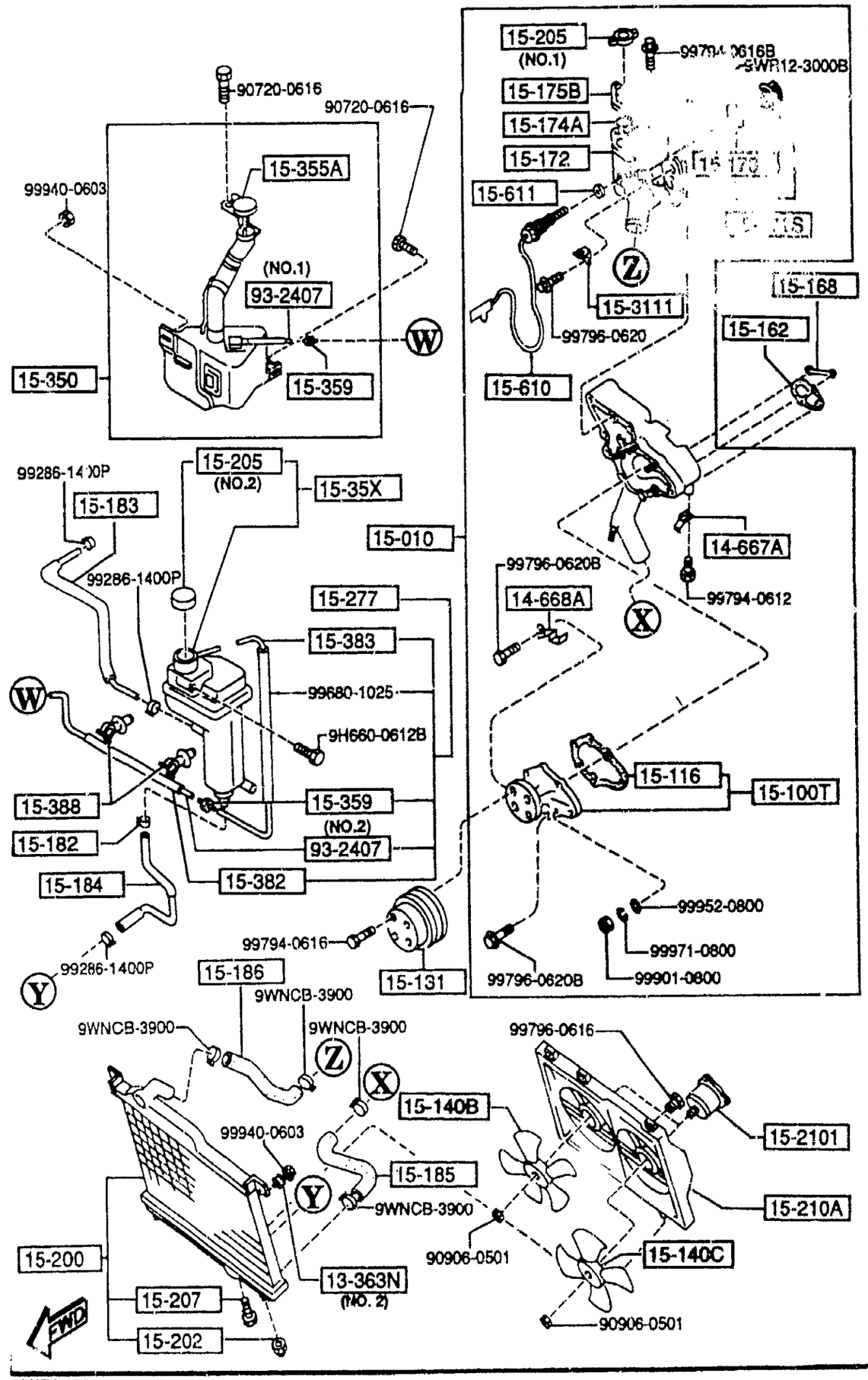

AUFA05

(HARD SUSP)

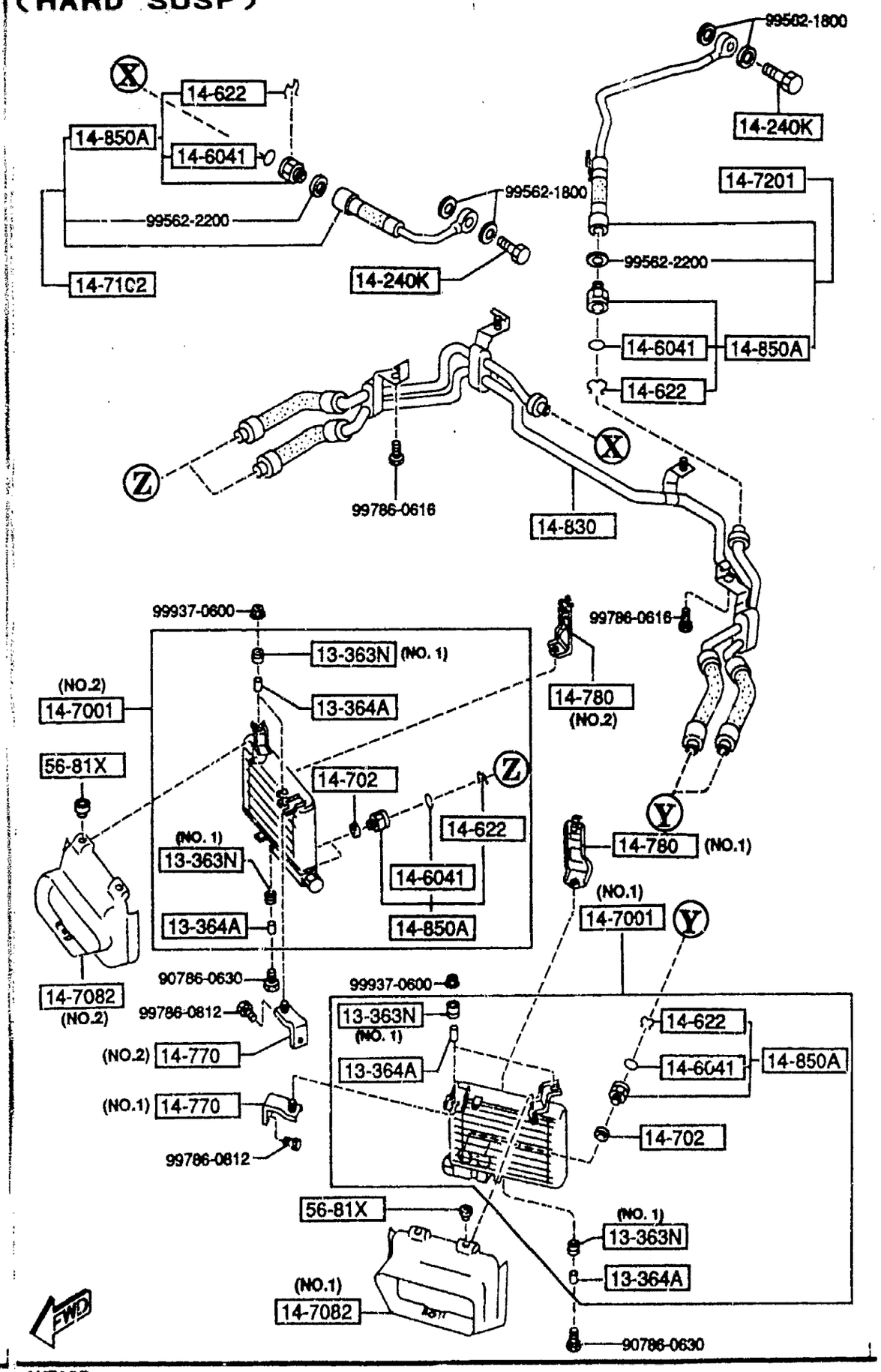

AUFA05

(NOR. SUSP)

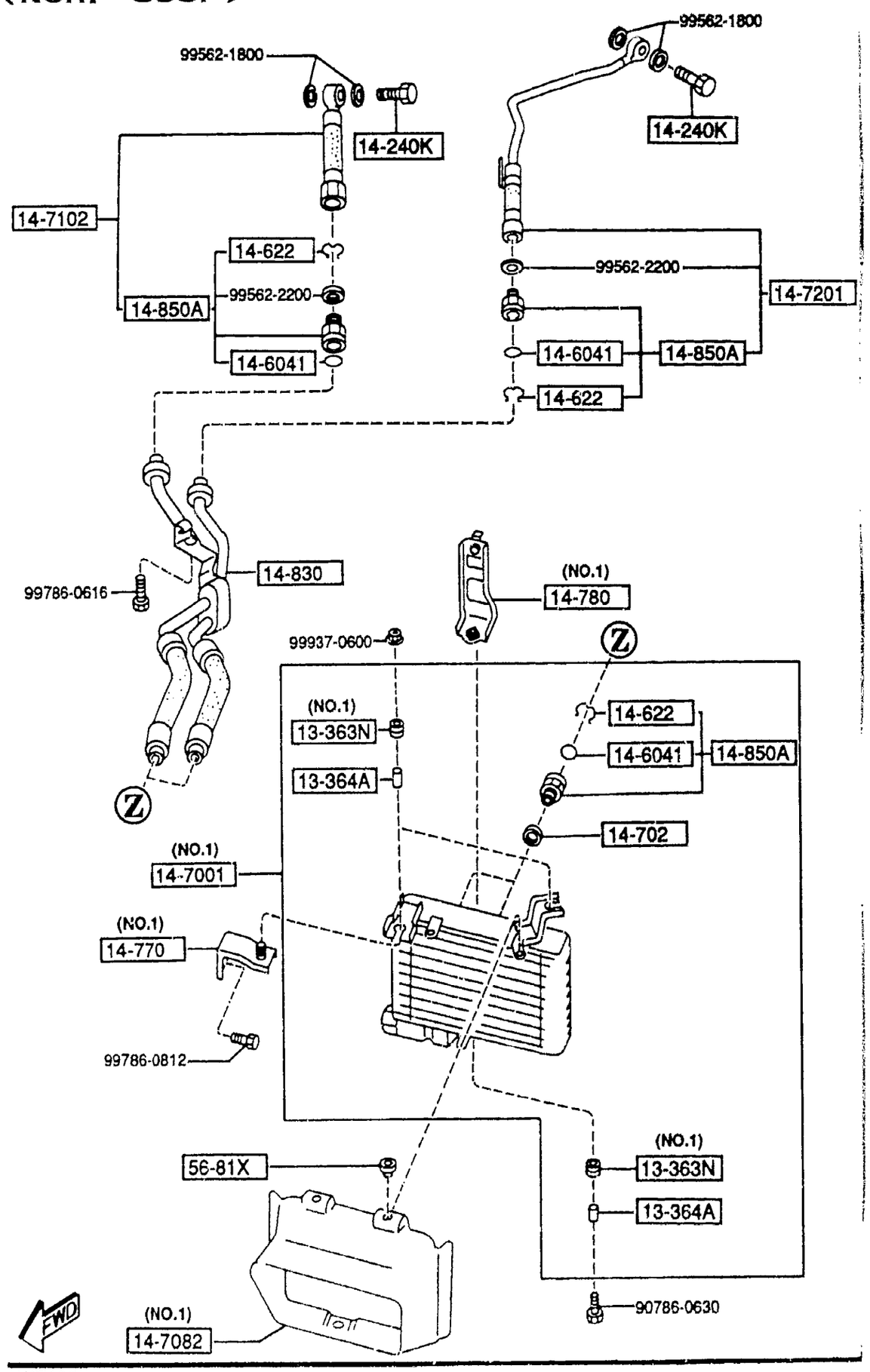

AUFA05

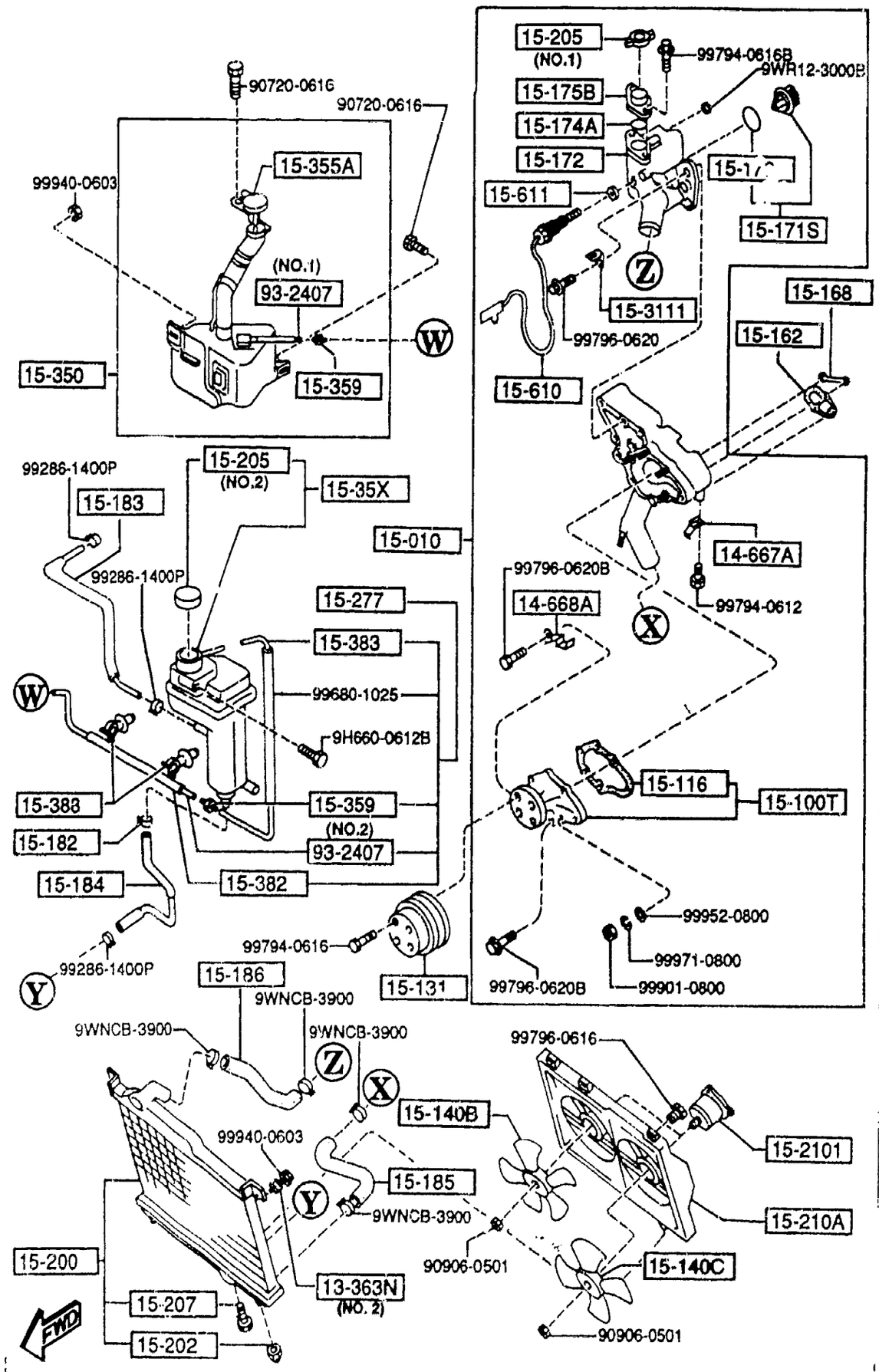

AUFA05

PART NO.	QTY	MODEL/RESTRICTION	MODEL/RESTRICTION	MODEL/RESTRICTION	FROM-TO
+---------+					
| 13-363N |		RUBBER,MOUNTING			
+---------+					
NF01-13-363	3	(ILLUST. NO.1) (NOR.SUSP)			
NF01-13-363	6	(ILLUST. NO.1) (HARD SUSP)			
0222-13-363	2	(ILLUST. NO.2)			
+---------+					
| 13-364A |		SPACER			
+---------+					
NF01-13-364	3	(NOR.SUSP)			
NF01-13-364	6	(HARD SUSP)			
+---------+					
| 14-240K |		BOLT,CONNECTOR			
+---------+					
*99381-1400	2				
+---------+					
| 14-6041 |		RING,'O'			
+---------+					
N3A1-14-604	4	(NOR.SUSP)			
N3A1-14-604	6	(HARD SUSP)			
+---------+					
| 14-622 |		STOPPER,CONNECTOR			
+---------+					
N3A1-14-622	4	(NOR.SUSP)			
N3A1-14-622	6	(HARD SUSP)			
+---------+					
| 14-667A |		CLIP,OIL TUBE			
+---------+					
N3A1-14-667 A (N3A1-14-667A)	1				-3A01
N3A1-14-667A	1				3A01-
+---------+					
| 14-668A |		CLIP,M.OIL TUBE			
+---------+					
N3A1-14-668 A (N3A1-14-668A)	1				-3A01
N3A1-14-668A	1				3A01-
+---------+					
| 14-7001 |		COOLER,OIL			
+---------+					
N3A1-14-700	1	(ILLUST. NO.1)			
N3A3-14-700	1	(ILLUST. NO.2) (HARD SUSP)			
+---------+					
| 14-702 |		GASKET			
+---------+					
N3A1-14-702	2	(NOR.SUSP)			
N3A1-14-702	4	(HARD SUSP)			

3A01 FD333*-300888

1500 COOLING SYSTEM (2/3)
(HARD SUSP)

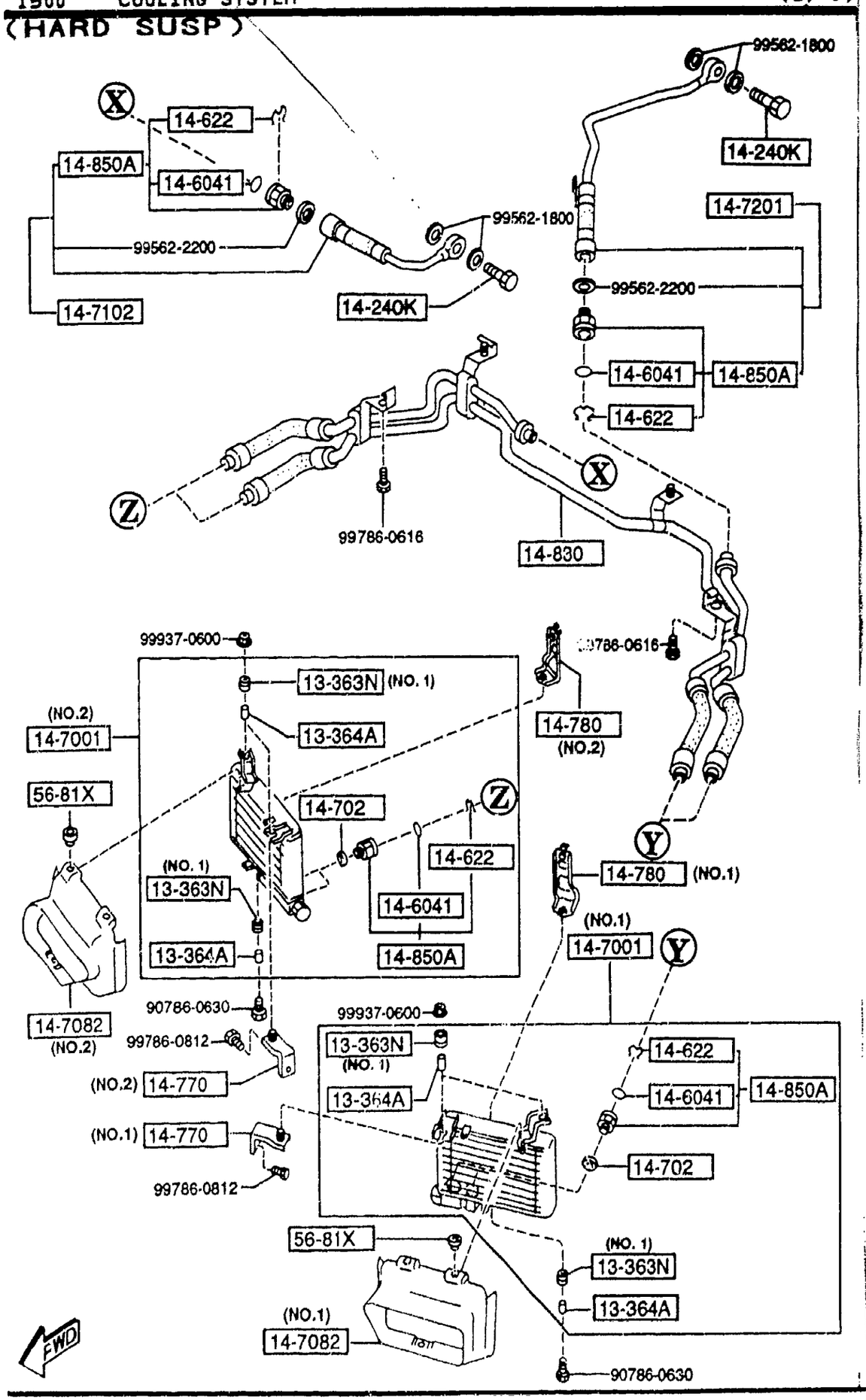

PART NO.	QTY	MODEL/RESTRICTION	MODEL/RESTRICTION	MODEL/RESTRICTION	FROM-TO
14-7082		DUCT,OIL COOLER			
N3A1-14-708	1	(ILLUST. NO.1)			
N3B2-14-708	1	(ILLUST. NO.2) (HARD SUSP)			
14-7102		HOSE,OIL			
N3A1-14-710B	1	(HARD SUSP)			
N3A2-14-710B	1	(NOR.SUSP)			
14-7201		HOSE,OIL			
N3A1-14-720B	1				
14-770		BRACKET,OIL COOLER			
N3A1-14-770B	1	(ILLUST. NO.1)			
N3A2-14-770B	1	(ILLUST. NO.2) (HARD SUSP)			
14-780		BRACKET,OIL COOLER			
N3A1-14-780B	1	(ILLUST. NO.1)			
N3A[illegible]14-780B	1	(ILLUST. NO.2) (HARD SUSP)			
14-830		HOSE,OIL			
N3A1-14-830A	1	(NOR.SUSP)			
N3A3-14-830A	1	(HARD SUSP)			
14-850A		CONNECTOR,OIL COOLER			
N3A1-14-850	4	(NOR.SUSP)			
N3A1-14-850	6	(HARD SUSP)			
15-010		PUMP,WATER			
N3C1-15-010 A (N3C1-15-010A)	1				-3A01
N3C2-15-010 A (N3C2-15-010A)	1				-3A01
N3C1-15-010A A (N3C1-15-010B)	1				3A01-3C16
N3C2-15-010A A (N3C2-15-010B)	1				3A01-3C16
N3C1-15-010B A (N3C1-15-010C)	1				3C16-4113
N3C2-15-010B	1				3C16-4113

3A01 FD333*-300888
3C16 FD333*-301628
4113 FD333*-301899

1500 COOLING SYSTEM (NOR. SUSP)

(3/3)

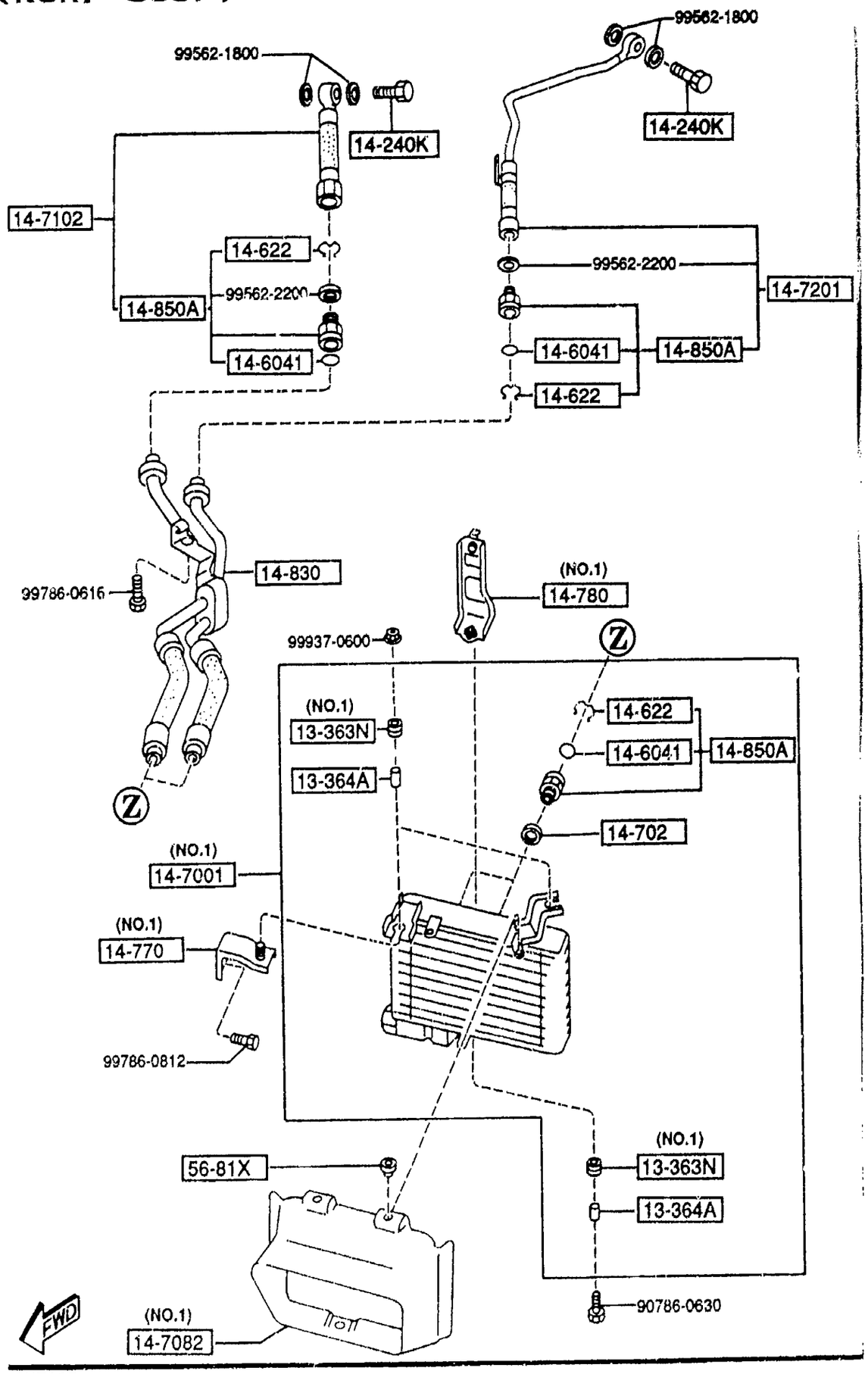

PART NO.	QTY	MODEL/RESTRICTION	MODEL/RESTRICTION	MODEL/RESTRICTION	FROM-TO
CONT'D					
A (N3C2-15-010C)					
N3C1-15-010C	1				4113-4216
A (N3C1-15-010D)					
N3C2-15-010C	1				4113-4216
A (N3C2-15-010D)					
N3C1-15-010D	1	(MT)			4216-
N3C2-15-010D	1	(AT)			4216-
+---------+					
| 15-100T |		HOUSING SET,BRG WATE			
+---------+		R PUMP			
8AF4-15-100	1				-3C15
A (8AF4-15-100A)					
8AF4-15-100A	1				3C15-
+---------+					
| 15-116 |		GASKET,WATER PUMP			
+---------+					
N3A1-15-116	1				
+---------+					
| 15-131 |		PULLEY,WATER PUMP			
+---------+					
N3A1-15-131	1				
+---------+					
| 15-140B |		FAN(R),COOLING			
+---------+					
*N3A2-15-140	1				
+---------+					
| 15-140C |		FAN(L),COOLING			
+---------+					
*N3A1-15-140	1				
+---------+					
| 15-162 |		GASKET			
+---------+					
N386-15-162	1	NON ASBESTOS			
+---------+					
| 15-168 |		SHIM,WATER PIPE BRAC			
+---------+		KET			
N3A1-15-168	1				
+---------+					
| 15-171S |		THERMOSTAT SET			
+---------+					
8AF6-15-171	1				
+---------+					
| 15-172 |		COVER,THERMOSTAT			
+---------+					
N3A1-15-172	1	(MT)			
N3A2-15-172	1	(AT)			
+---------+					
| 15-173 |		GASKET,THERMOSTAT CO			
+---------+		VER			
N3C1-15-173	1				

3C15 FD333*-301612
4113 FD333*-301899
4216 FD333*-302529

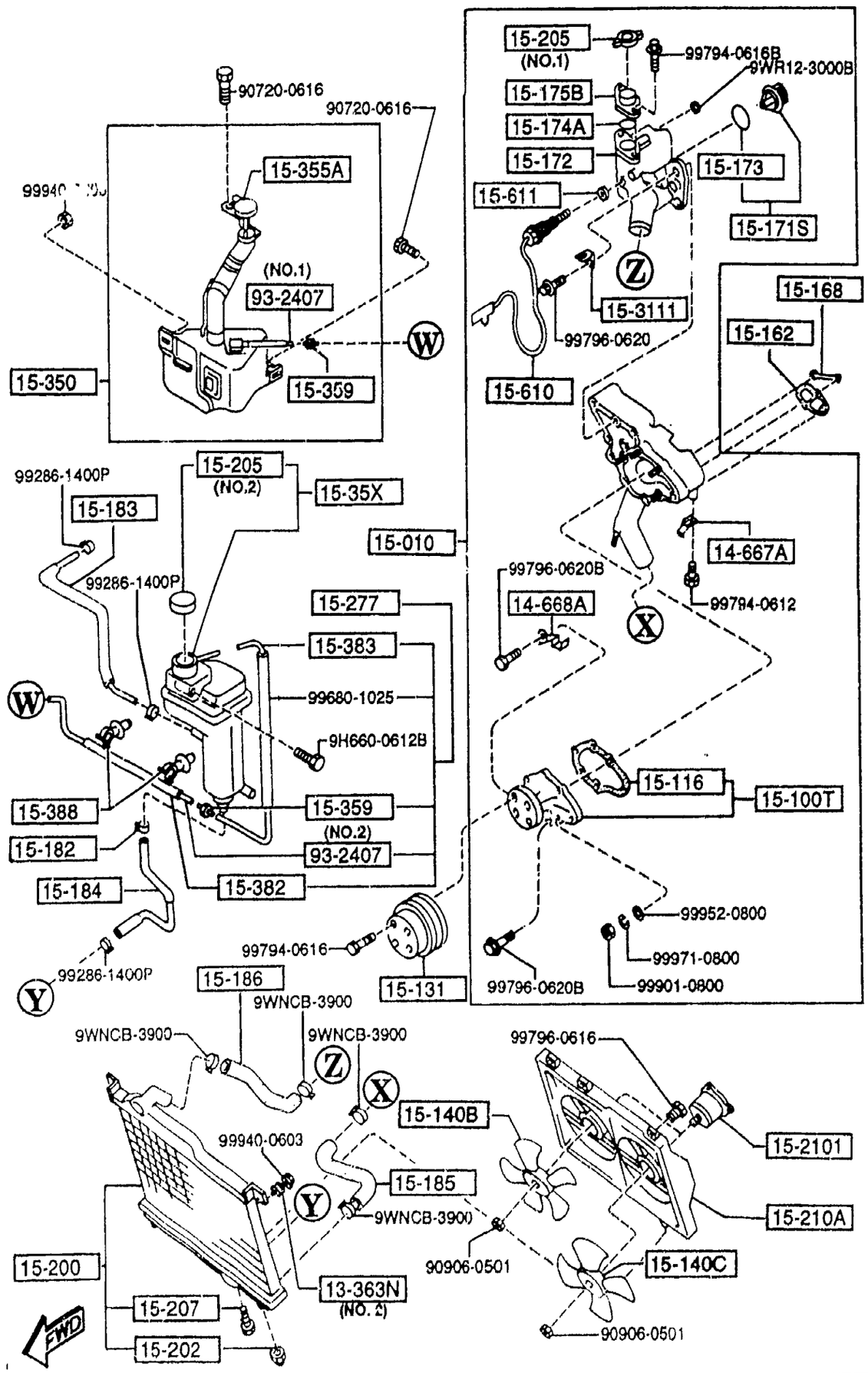

AUFA05

PART NO.	QTY	MODEL/RESTRICTION	MODEL/RESTRICTION	MODEL/RESTRICTION	FROM-TO
15-174A		RING			
N326-15-174	1				
15-175B		BODY,FILLER CAP			
N323-15-175	1				-4216
N3C1-15-175	1				4216-
15-182		CLAMP,WATER HOSE			
N3A1-15-182A	1				
15-183		HOSE,WATER			
N3A1-15-183 A (N3A1-15-183A)	1				-3C10
N3A1-15-183A	1				3C10-
15-184		HOSE,WATER			
N3A1-15-184A	1				
15-185		HOSE,WATER			
N3A1-15-185A	1				
15-186		HOSE,WATER			
N3A1-15-186 A (N3A1-15-186A)	1				-3C10
N3A1-15-186A	1				3C10-
15-200		RADIATOR			
N3A1-15-200A	1	(MT)			
N3A2-15-200A	1	(AT)			
15-202		RUBBER,MOUNT			
JE48-15-202	2				
15-205		CAP,RADIATOR			
KF01-15-205	1	(ILLUST. NO.1)			
N3A1-15-205 A (N3A1-15-205A)	1				-4301
N3A1-15-205A	1	(ILLUST. NO.2)			4301-
15-207		COCK,DRAIN			
NF01-15-203		CALSONIC			

3C10 FD333*-301568
4216 FD333*-302529
4301 FD333*-302764

1500 COOLING SYSTEM (2/3)

(HARD SUSP)

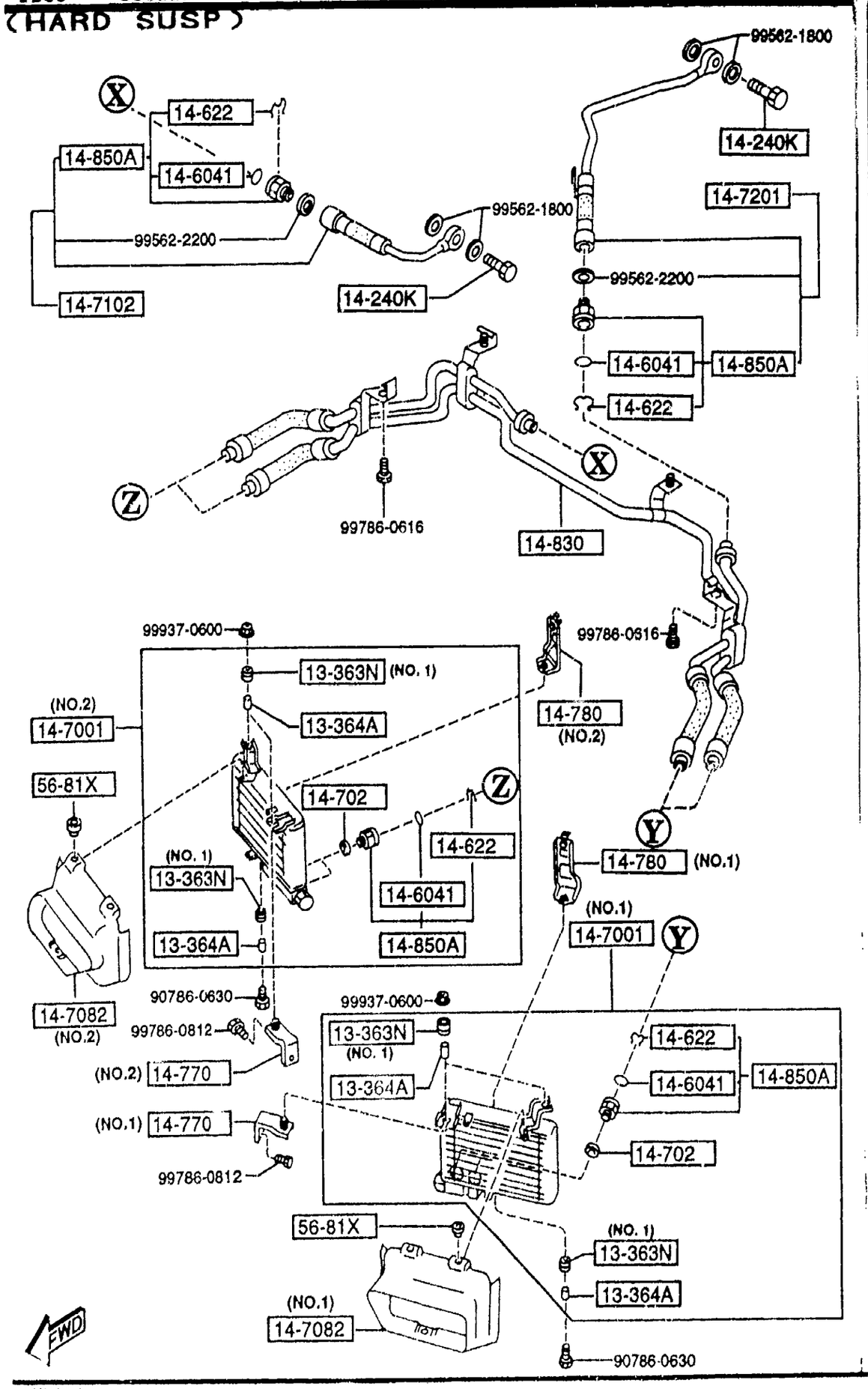

PART NO.	QTY	MODEL/RESTRICTION	MODEL/RESTRICTION	MODEL/RESTRICTION	FROM-TO
CONT'D	1				
15-210A		COWLING,RADIATOR			
N3A2-15-211B	1				
15-2101		FAN DRIVE			
N3A1-15-150	2				
15-277		HOSE,WATER SUB TANK			
N3A1-15-380C	1				
15-3111		BRACKET			
N3A1-15-109	1				
15-35X		TANK,AIR SEPARATE			
N3A1-15-35XA	1				-4301
A (N3A1-15-35XB)					
N3A1-15-35XB	1				4301-
15-350		TANK,SUB-RADIATOR			
N3A1-15-350B	1				
15-355A		CAP,SUB TANK			
N3A1-15-355	1				
15-359		PIPE,JOINT			
N3A1-15-359	2				
15-382		PROTECTOR,HOSE-SUB TANK			
F201-15-382	1				
15-383		HOSE,SUB TANK			
N3A1-15-383	1				
15-388		CLIP,HOSE-SUB T.& WATER H			
F201-15-388A	2				
15-610		SENSOR,WATER LEVEL			
N3A1-15-610	1				-4113
A (N3A1-15-610A)					
N3A1-15-610A	1				4113-

4113 FD333*-301899
4301 FD333*-302764

1500 COOLING SYSTEM (3/3)
(NOR. SUSP)

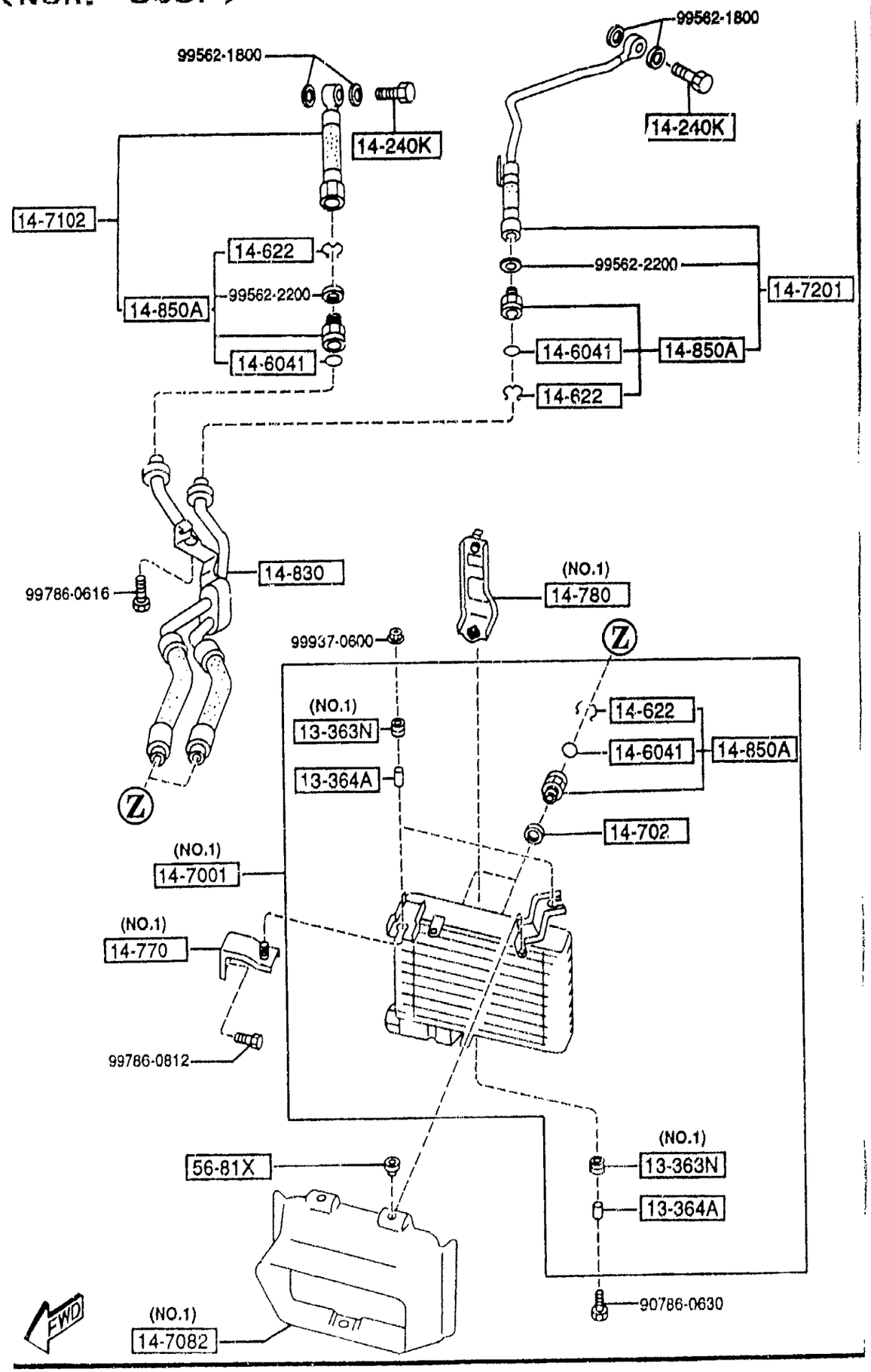

PART NO.	QTY	MODEL/RESTRICTION	MODEL/RESTRICTION	MODEL/RESTRICTION	FROM-TO
15-611		GASKET			
8553-15-611	1				
56-81X		FASTENER,DUCT PANEL			
FB01-56-81X	3	(NOR.SUSP)			
FB01-56-81X	6	(HARD SUSP)			
93-2407		HOSE,WATER			
99324-07200	1	(ILLUST. NO.1)			
99324-07400	1	(ILLUST. NO.2)			

AUFA05

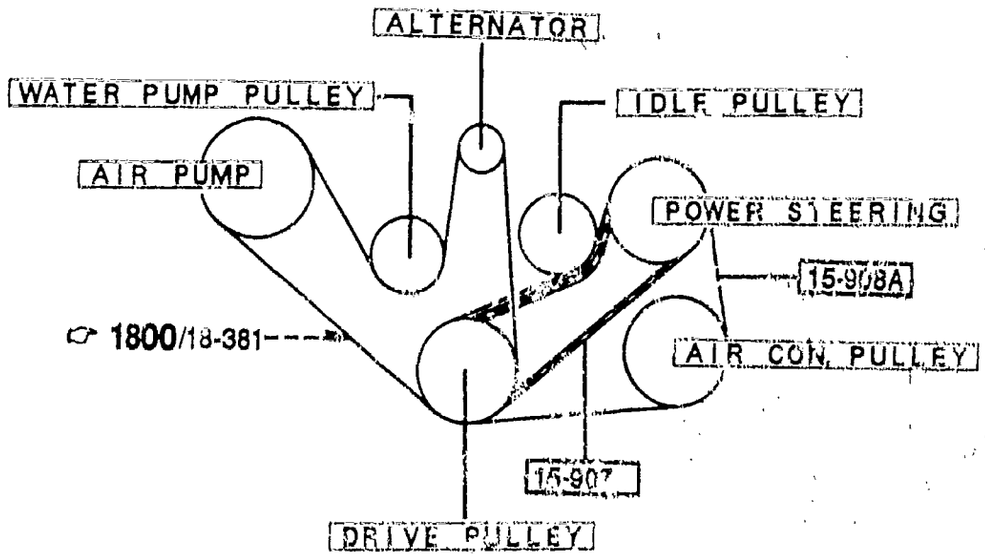

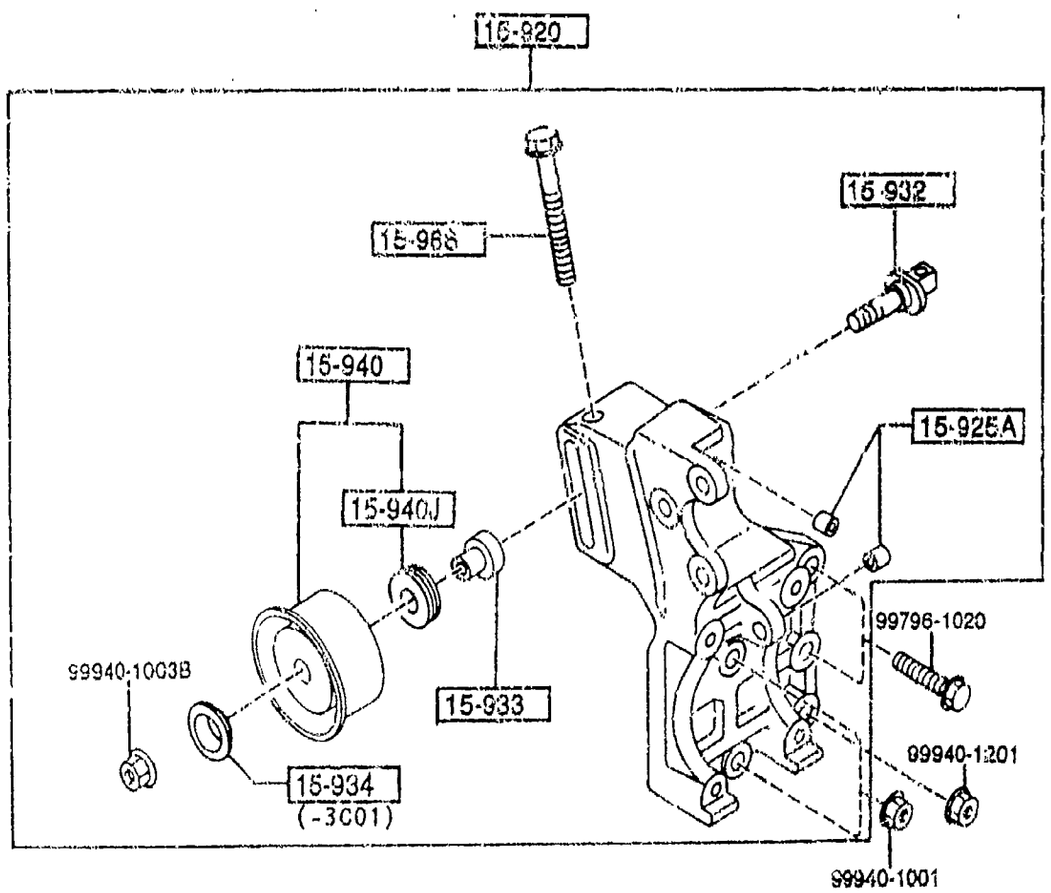

FWD

1580 -1 * BRACKET,PULLEY & BELT

PART NO.	QTY	MODEL/RESTRICTION	MODEL/RESTRICTION	MODEL/RESTRICTION	FROM-TO
15-907		BELT'V'			
N3A1-15-907	1	6PK-920 (W/ P.S.)			
15-908A		BELT,V			
N3A1-15-908	1	6PK-1045 (W/AIR CON.)			
15-920		BRACKET,COMPRESSOR			
N3A1-15-910A	1	(W/ P.S.)			
15-925A		BUSH			
N326-15-812	2	(W/ P.S.)			
15-932		SHAFT,PULLEY			
N3A1-15-932	1	(W/ P.S.)			-3C01
N3A1-15-932A	1	(W/ P.S.)			3C01-
15-933		COLLAR,COMP.BRKT			
N3A1-15-933	1	(W/ P.S.)			-3C01
N3A1-15-933A	1	(W/ P.S.)			3C01-
15-934		COVER,DUST			
N3A1-15-934	1	(W/ P.S.)			-3C01
15-943		PULLEY,IDLE			
N3A1-15-94Y	1	(W/ P.S.)			
15-940J		BEARING			
99606-23030	1	(W/ P.S.)			
15-966		BOLT,ADJUST			
N3A1-15-966	1	(W/ P.S.)			

3C01 FD333*-301464

1600 CLUTCH DISC & COVER (MANUAL)

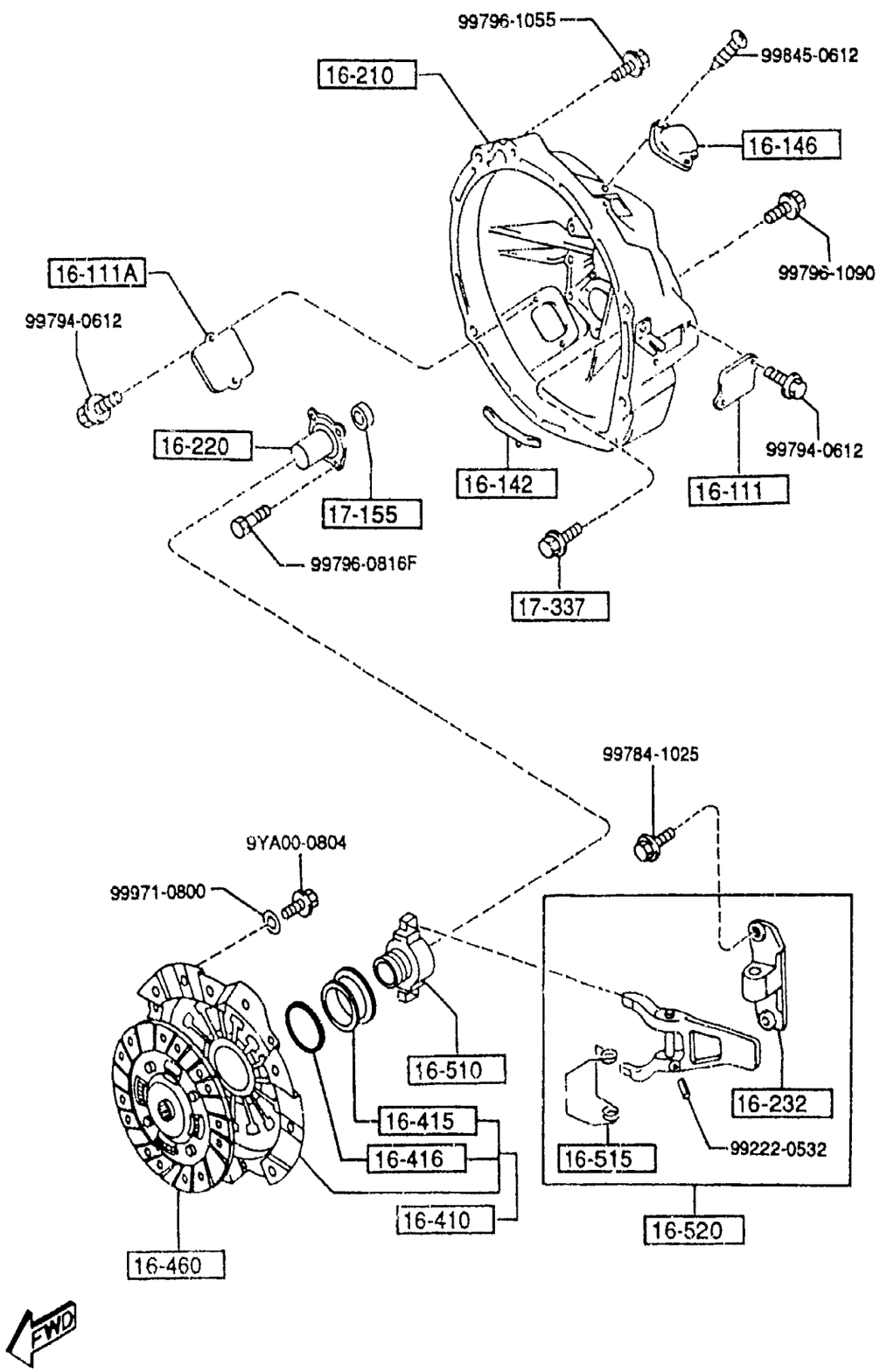

PART NO.	QTY	MODEL/RESTRICTION	MODEL/RESTRICTION	MODEL/RESTRICTION	FROM-TO
16-111		COVER,PEEPING HOLE			
N315-16-111	1				
16-111A		COVER,PEEPING HOLE			
N315-16-117	1				
16-142		COVER,DUST			
N315-16-142	1				
16-146		COVER,VENT.			
N315-16-150	1				
16-210		HOUSING,CLUTCH			
N315-16-210B	1				
16-220		COVER,FRONT CLUTCH			
N315-16-221	1				
16-232		BUSH			
N315-16-522	1				
16-410		COVER,CLUTCH			
N315-16-410B	1				
16-415		COLLAR,WEDGE			
N315-16-415	1				
16-416		RING,WIRE			
N315-16-416	1				
16-460		DISC,CLUTCH			
N315-16-460B		NON ASBESTOS			
A (N315-16-460C)	1				-3805
N315-16-460C	1				3805-
16-510		COLLAR,CLUTCH REL.			
N315-16-510	1				
16-515		SPRING,CLUTCH COLLAR			
N315-16-515	1				

3805 FD333*-300031

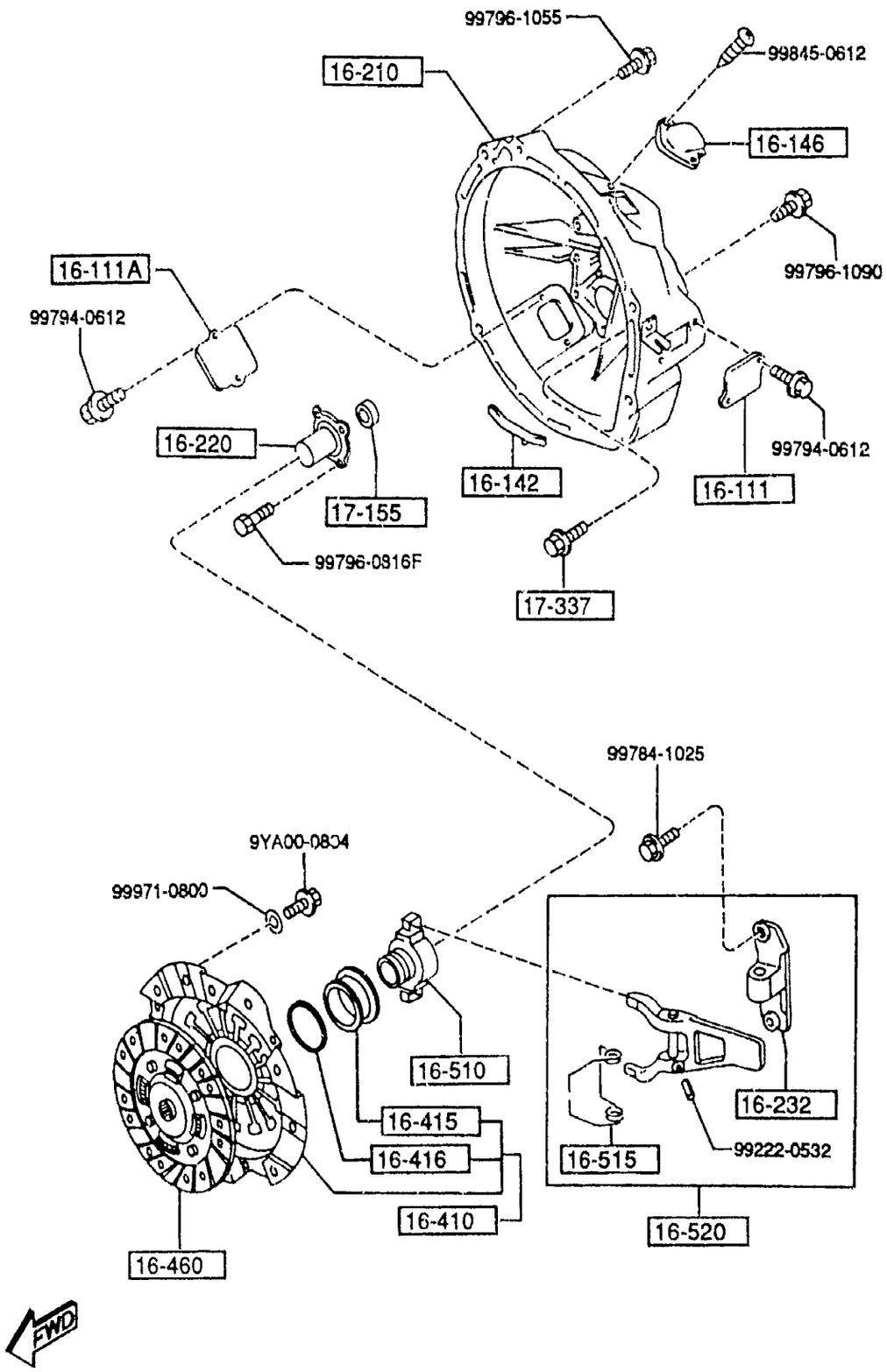

PART NO.	QTY	MODEL/RESTRICTION	MODEL/RESTRICTION	MODEL/RESTRICTION	FROM-TO
16-520		FORK,CLUTCH RELEASE			
N315-16-520B	1				
17-155		SEAL,OIL			
H501-17-103	1				
17-337		BOLT			
R401-17-337A	10				

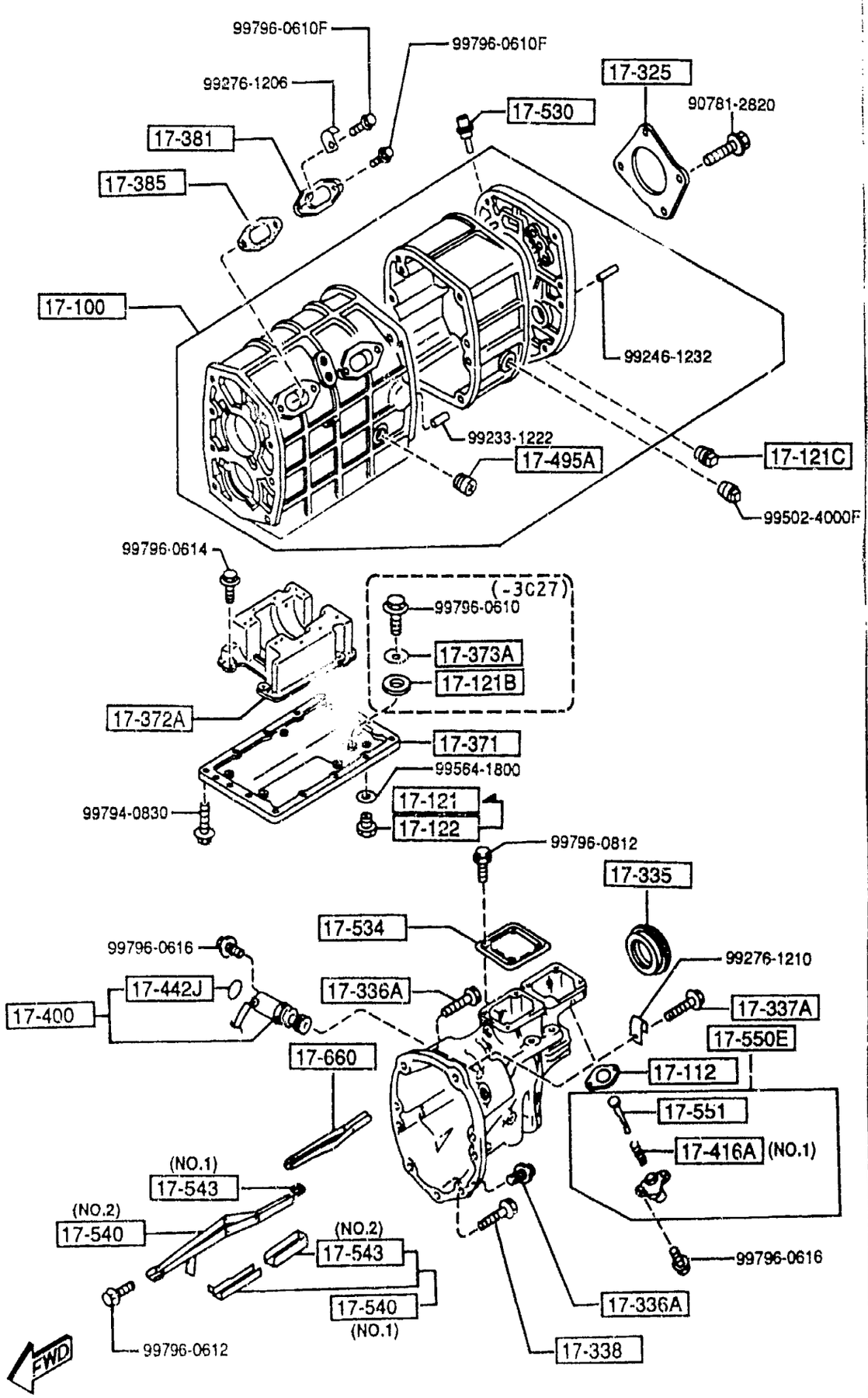
99796-0610F
99796-0610F
99276-1206
17-325
17-530
90781-2820
17-381
17-385
17-100
99246-1232
99233-1222
17-495A
17-121C
99502-4000F
99796-0614
(-3C27)
99796-0610
17-373A
17-121B
17-372A
17-371
99564-1800
17-121
17-122
99794-0830
99796-0812
17-335
17-534
99796-0616
99276-1210
17-442J
17-336A
17-337A
17-400
17-550E
17-660
17-112
17-551
17-416A (NO.1)
(NO.1)
17-543
(NO.2)
17-540
(NO.2)
17-543
17-540
(NO.1)
99796-0616
17-336A
99796-0612
17-338
FWD

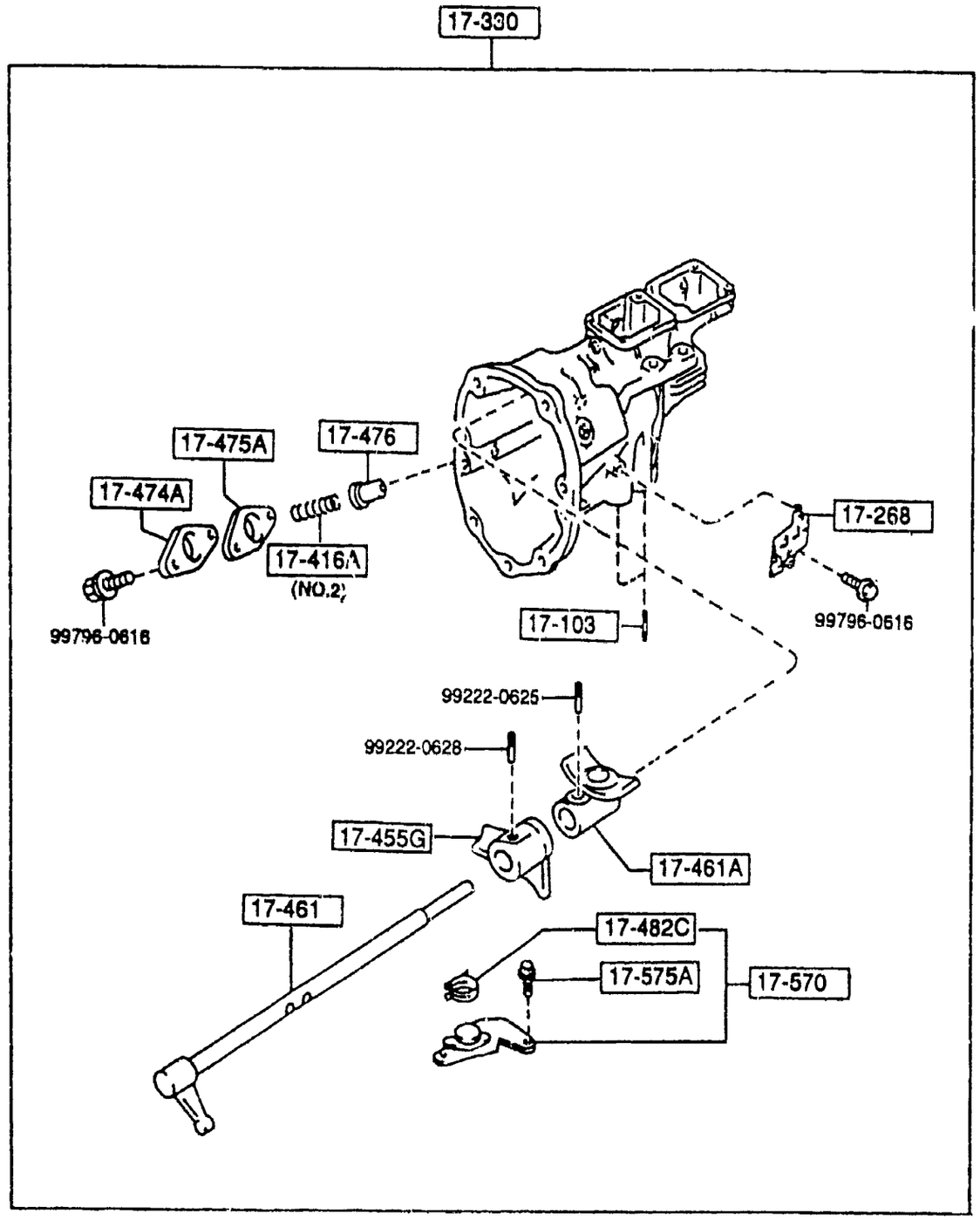
17-330
17-475A
17-476
17-474A
17-416A
(NO.2)
17-268
99796-0616
17-103
99796-0616
99222-0625
99222-0628
17-455G
17-461A
17-461
17-482C
17-575A
17-570
FWD

1700 TRANSMISSION CASE (MANUAL) (1/2)

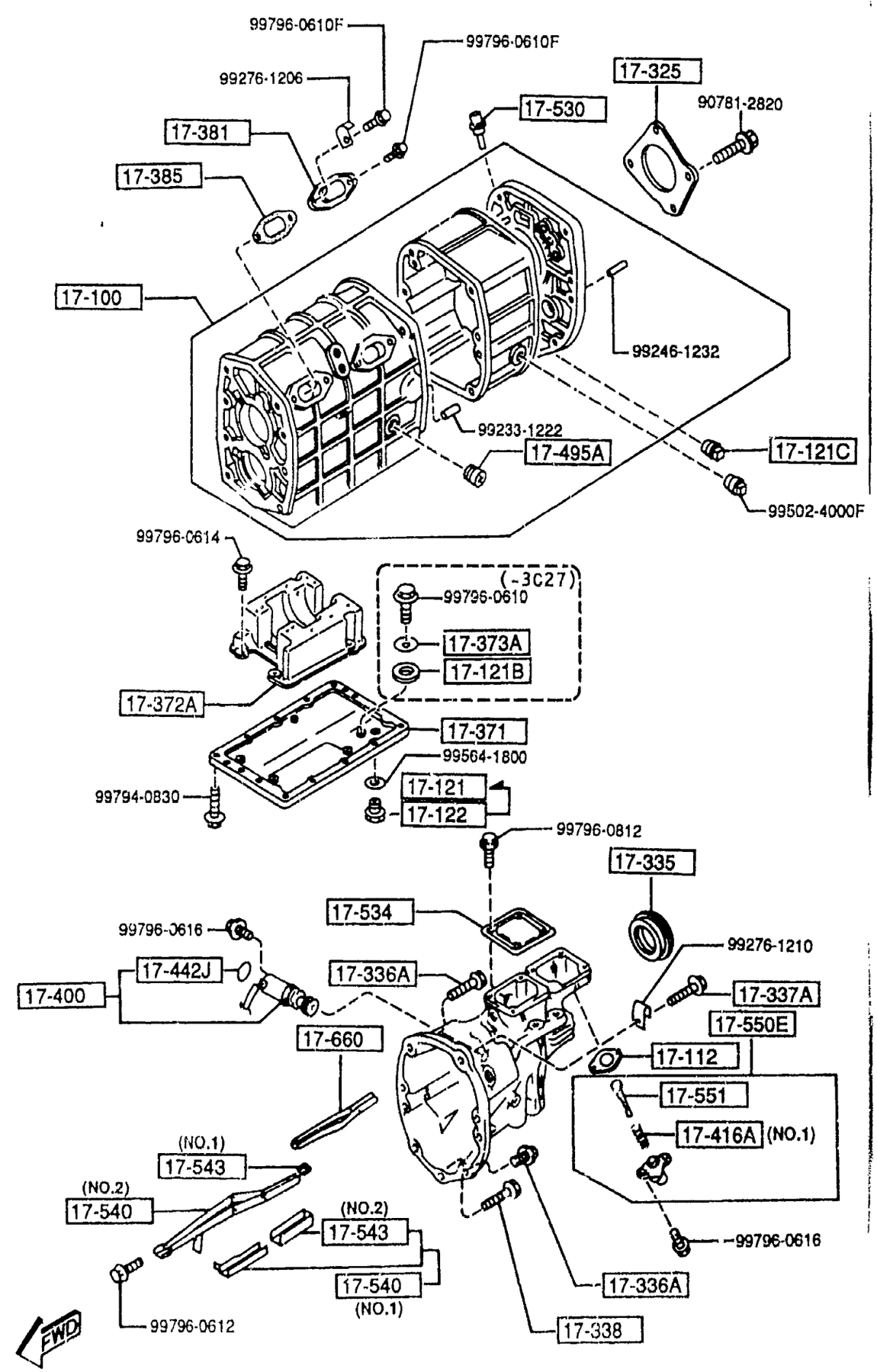

PART NO.	QTY	MODEL/RESTRICTION	MODEL/RESTRICTION	MODEL/RESTRICTION	FROM-TO
17-100 R501-17-20XA	1	CASE,T/MISSION			
17-103 R526-17-103	2	BOLT			
17-112 S524-17-112	1	GASKET			
17-121 P501-17-125A	1	PLUG,MAGNET DRAIN L=50MM			3C27-
17-121B R501-17-121	1	MAGNET			-3C27
17-121C 0107-17-121	1	PLUG,MAGNET			
17-122 0810-17-121	1	PLUG,MAGNET			-3C27
17-268 R507-17-268	1	CLIP			
17-325 08B4-17-325B	1	COVER,BEARING			
17-330 R526-17-330A	1	HOUSING,EXTENSION			
17-335 R501-17-335A	1	SEAL,OIL			
17-336A R505-17-337	5	BOLT			
17-337A R504-17-337	1	BOLT			
17-338		BOLT			

3C27 FD333*-301727

1700 TRANSMISSION CASE (MANUAL) (2/2)

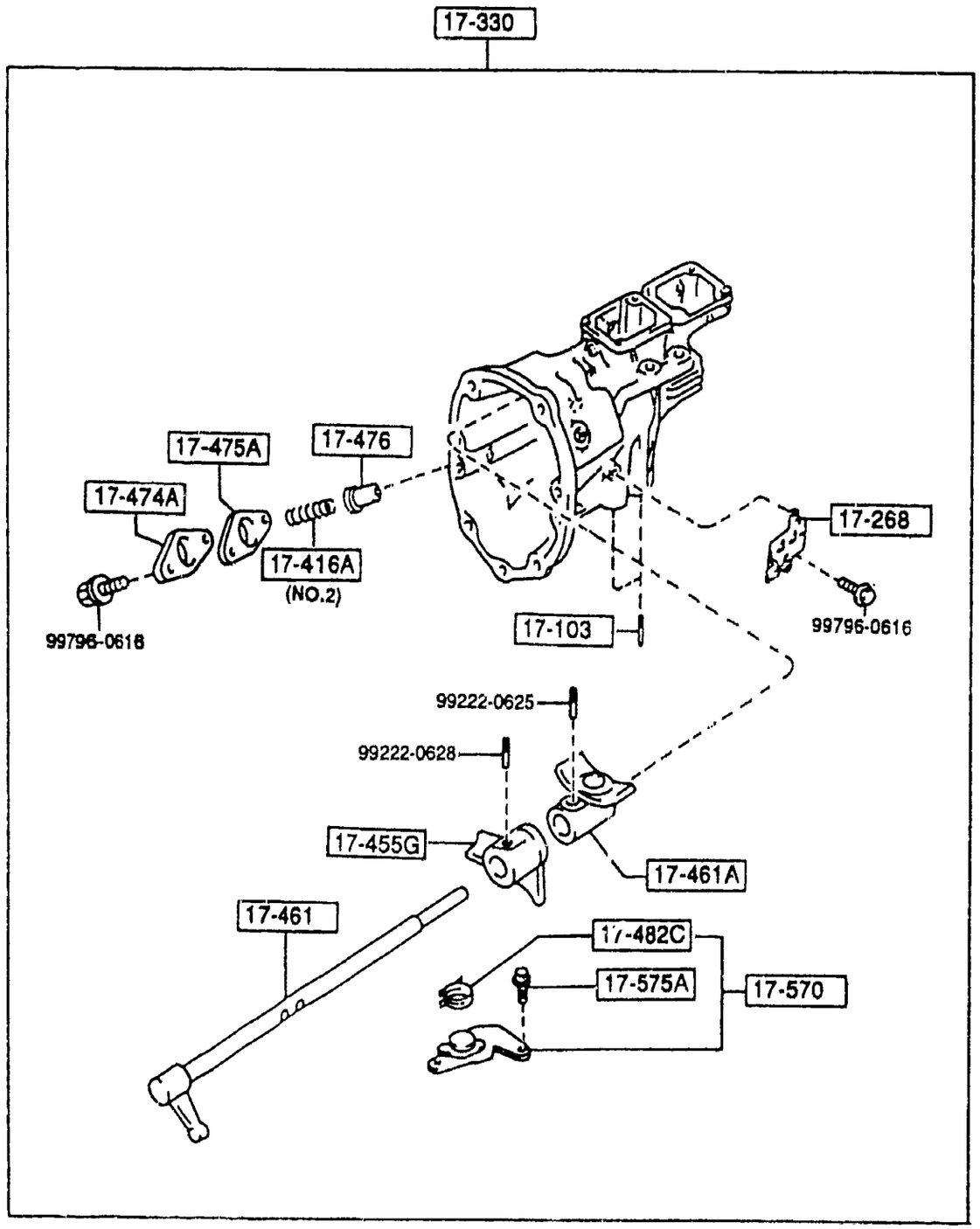

PART NO.	QTY	MODEL/RESTRICTION	MODEL/RESTRICTION	MODEL/RESTRICTION	FROM-TO
CONT'D					
R502-17-338	1				
+---------+					
| 17-371 |		COVER,UNDER			
+---------+					
R502-17-371	1				
+---------+					
| 17-372A |		BAFFLE,OIL			
+---------+					
R501-17-372	1				
+---------+					
| 17-373A |		PLATE,DRAIN PLUG-UNDER C.			
+---------+					
R501-17-373	1				-3C27
+---------+					
| 17-381 |		COVER,BLIND			
+---------+					
0810-17-381A	2				
+---------+					
| 17-385 |		GASKET,BLIND COVER			
+---------+					
R501-17-385A	2	NON ASBESTOS			
+---------+					
| 17-400 |		GEAR SET,DRIVEN-SPEED			
+---------+					
R505-17-400B	1				
+---------+					
| 17-416A |		SPRING			
+---------+					
R505-17-416	1	(ILLUST. NO.1)			
R506-17-416	1	(ILLUST. NO.2)			
+---------+					
| 17-442J |		RING,'O'			
+---------+					
1011-17-443	1				
+---------+					
| 17-455G |		SELECTOR			
+---------+					
R504-17-455	1				
+---------+					
| 17-461 |		LEVER,CONTROL			
+---------+					
R514-17-450A	1				
+---------+					
| 17-461A |		END,CONTROL LEVER			
+---------+					
R522-17-461A	1				
+---------+					
| 17-474A |		CAP,SPRING			
+---------+					
M501-17-474	1				
+---------+					
| 17-475A |		GASKET,SPRING CAP			
+---------+					

3C27 FD333*-301727

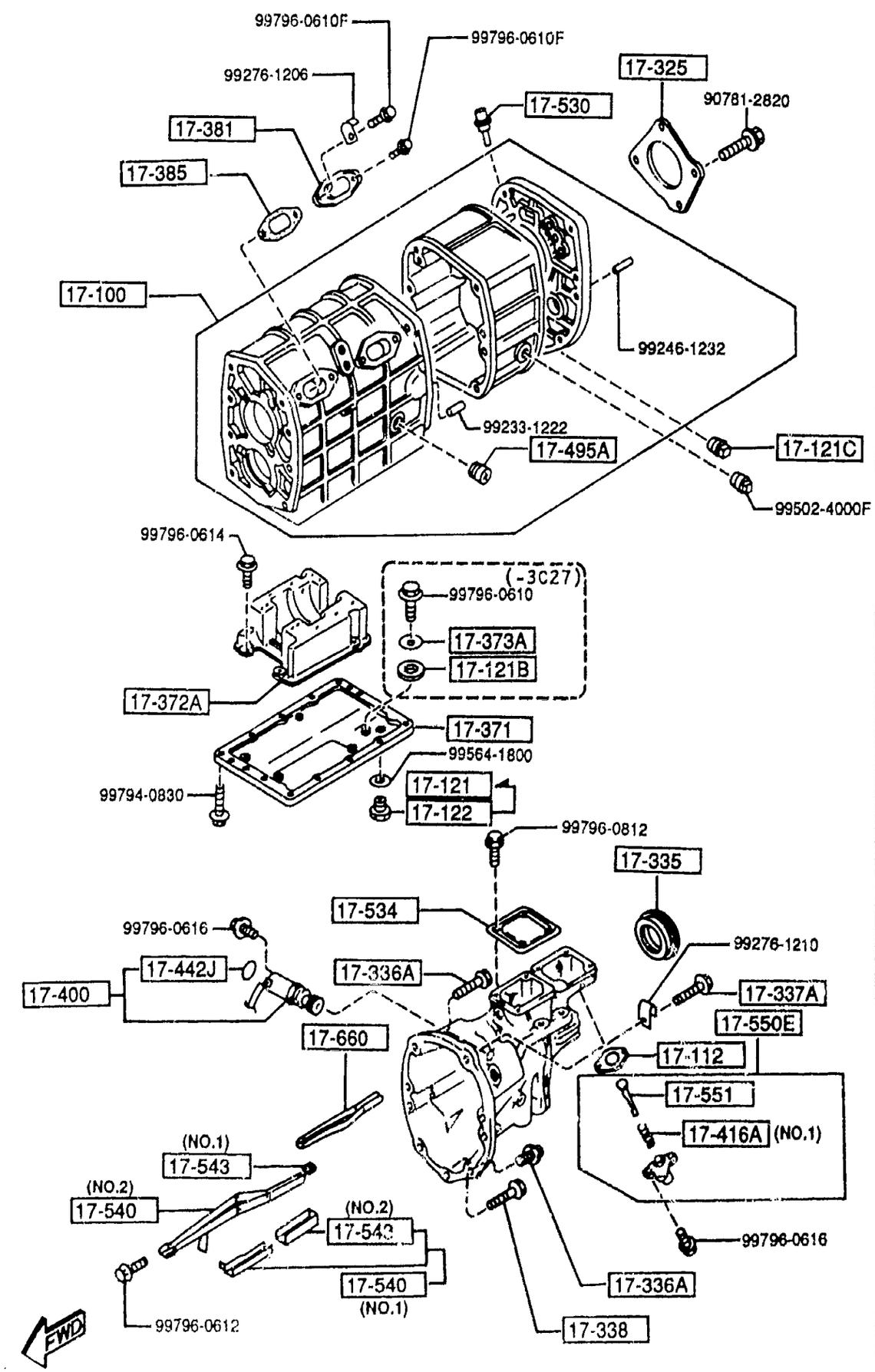

PART NO.	QTY	MODEL/RESTRICTION	MODEL/RESTRICTION	MODEL/RESTRICTION	FROM-TO
CONT'D					
M501-17-475	1				
+----------+					
| 17-476 |		SPINDLE,SELECT LOCK			
+----------+					
R501-17-476	1				
+----------+					
| 17-482C |		SPRING,REVERSE GATE			
+----------+					
G5A0-17-482B	1				
+----------+					
| 17-495A |		PLUG			
+----------+					
R502-17-495	1				
+----------+					
| 17-530 |		BREATHER,AIR-T/MISSION			
+----------+					
M501-17-530A	1				
+----------+					
| 17-534 |		COVER,BLIND-EXTENSION HOUSING			
+----------+					
R501-17-523	1				
+----------+					
| 17-540 |		PASS,OIL			
+----------+					
R505-17-540	1	(ILLUST. NO.1)			
R507-17-540	1	(ILLUST. NO.2)			
+----------+					
| 17-543 |		RUBBER,SEAL			
+----------+					
M501-17-543A	1	(ILLUST. NO.1)			
R505-17-543	1	(ILLUST. NO.2)			
+----------+					
| 17-550E |		SPINDLE,SELECT			
+----------+					
R503-17-550	1				
+----------+					
| 17-551 |		SPINDLE,SELECT LOCK			
+----------+					
R502-17-551	1				
+----------+					
| 17-570 |		GUIDE,CHANGE			
+----------+					
R526-17-570	1				
+----------+					
| 17-575A |		BOLT			
+----------+					
P501-17-575	2				
+----------+					
| 17-660 |		PASS,OIL			
+----------+					
0862-17-660C	1				

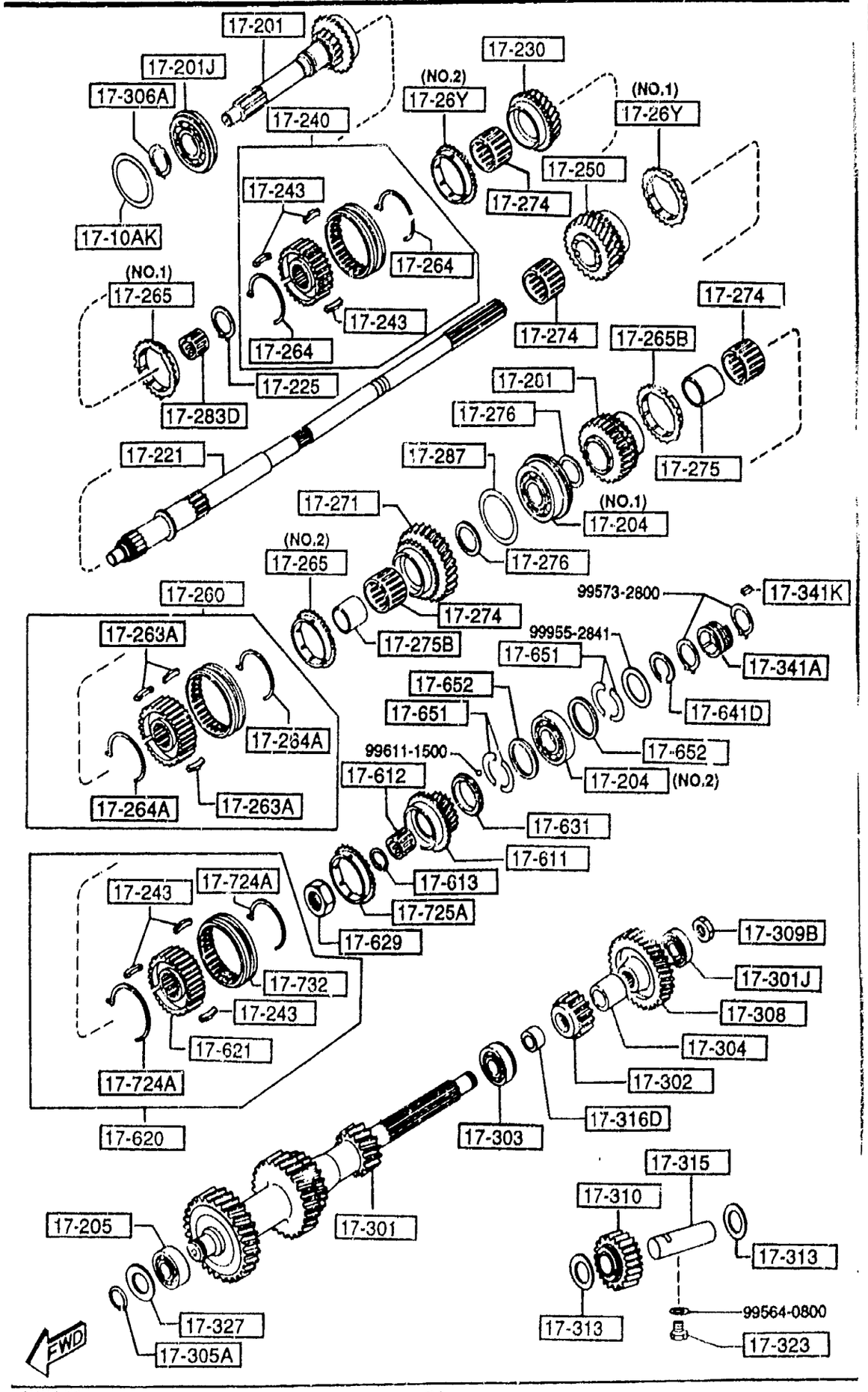

PART NO.	QTY	MODEL/RESTRICTION	MODEL/RESTRICTION	MODEL/RESTRICTION	FROM-TO
17-10AK		SHIM,ADJUST			
99963-6930	1	T=0.3MM			
99963-6940	1	T=0.4MM			
99963-6950	1	T=0.5MM			
99963-6960	1	T=0.6MM			
99963-6970	1	T=0.7MM			
17-201		GEAR,MAIN DRIVE			
R509-17-21X	1				
17-201J		BEARING,BALL-MAIN DRIVE GEAR			
R501-17-295	1				
17-204		BEARING,BALL-MAIN SHAFT			
R501-17-204	1	O=75/I=32/W=20 (ILLUST. NO.1)			
R502-17-204	1	O=68/I=28/W=18 (ILLUST. NO.2)			
17-205		BEARING,ROLLER			
R502-17-306A	1				
17-221		SHAFT,MAIN			
R503-17-221B	1				
17-225		RING,SNAP			
0317-17-225	1				
17-230		GEAR,3RD			
R527-17-230	1				
17-240		HUB SET,CLUTCH-3RD & 4TH			
R523-17-240	1				
17-243		KEY,SYNCHRONIZER			
F401-17-243A	6				

1710 TRANSMISSION GEARS(MANUAL)

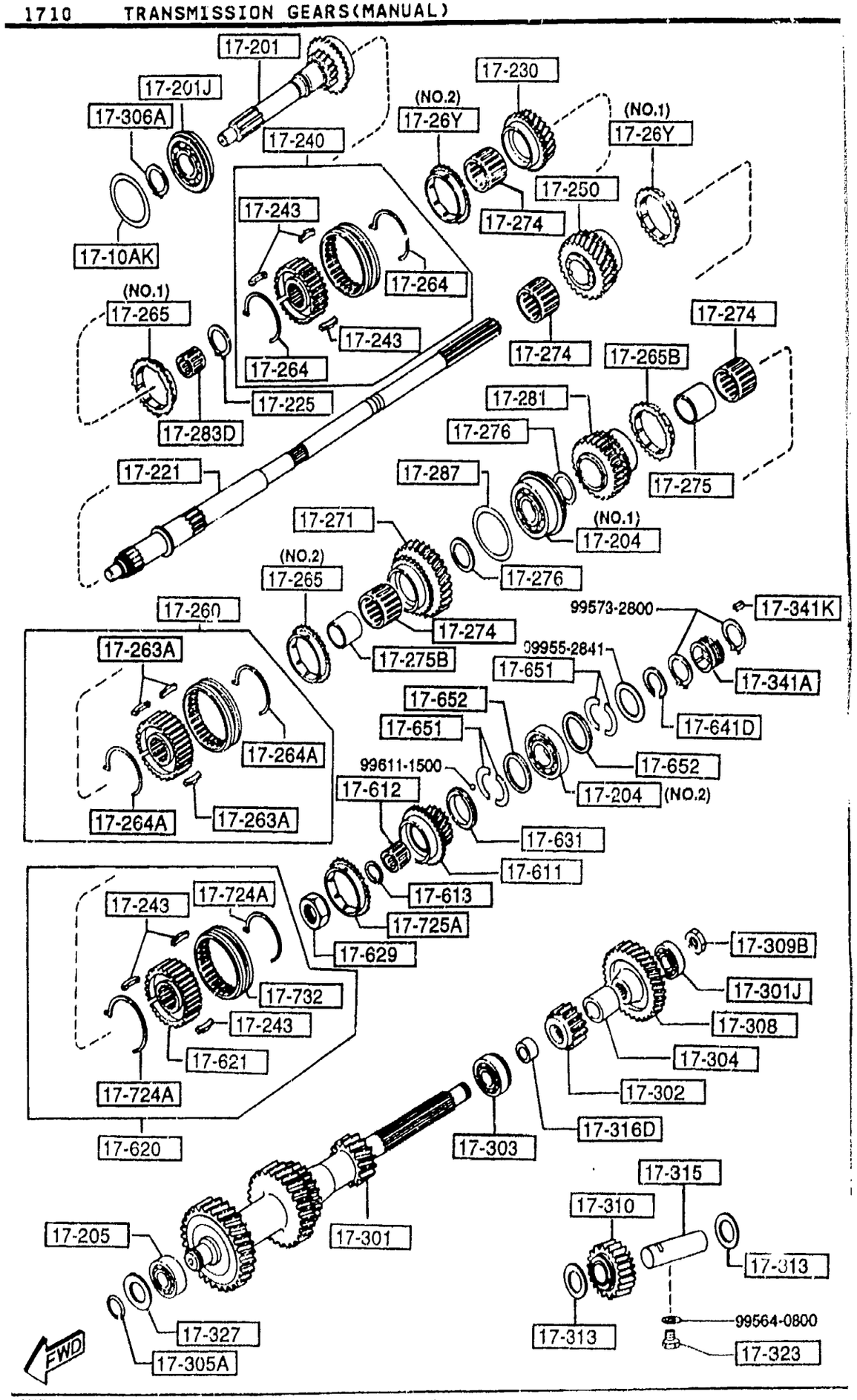

PART NO.	QTY	MODEL/RESTRICTION	MODEL/RESTRICTION	MODEL/RESTRICTION	FROM-TO
17-250		GEAR,2ND			
R535-17-250	1				
17-26Y		RING,SYNCHRONIZER			
R503-17-26Y	1	(ILLUST. NO.1)			
R504-17-26Y	1	(ILLUST. NO.2)			
17-260		HUB SET,CLUTCH-1ST & 2ND			
R523-17-260A	1				
17-263A		KEY,SYNCHRONIZER			
W501-17-263A	3				
17-264		SPRING,SYNCHRO. KEY			
G401-17-264	2				
17-264A		SPRING,SYNCHRONIZER			
R501-17-264	2				
17-265		RING,SYNCHRONIZER			
M502-17-265C	1	(ILLUST. NO.1)			
R514-17-265B	1	(ILLUST. NO.2)			
17-265B		RING,SYNCHRONIZER			
R503-17-265B	1				
17-271		GEAR,1ST			
R513-17-270A	1				
17-274		BEARING,NEEDLE			
0884-17-274	4				
17-275		RACE,INNER			
3648-17-275A	1				
17-275B		RACE,INNER			
0884-17-275B	1				
17-276		WASHER,THRUST			
0839-17-276	1	T=2.5MM			

1710 -3 TRANSMISSION GEARS(MANUAL)

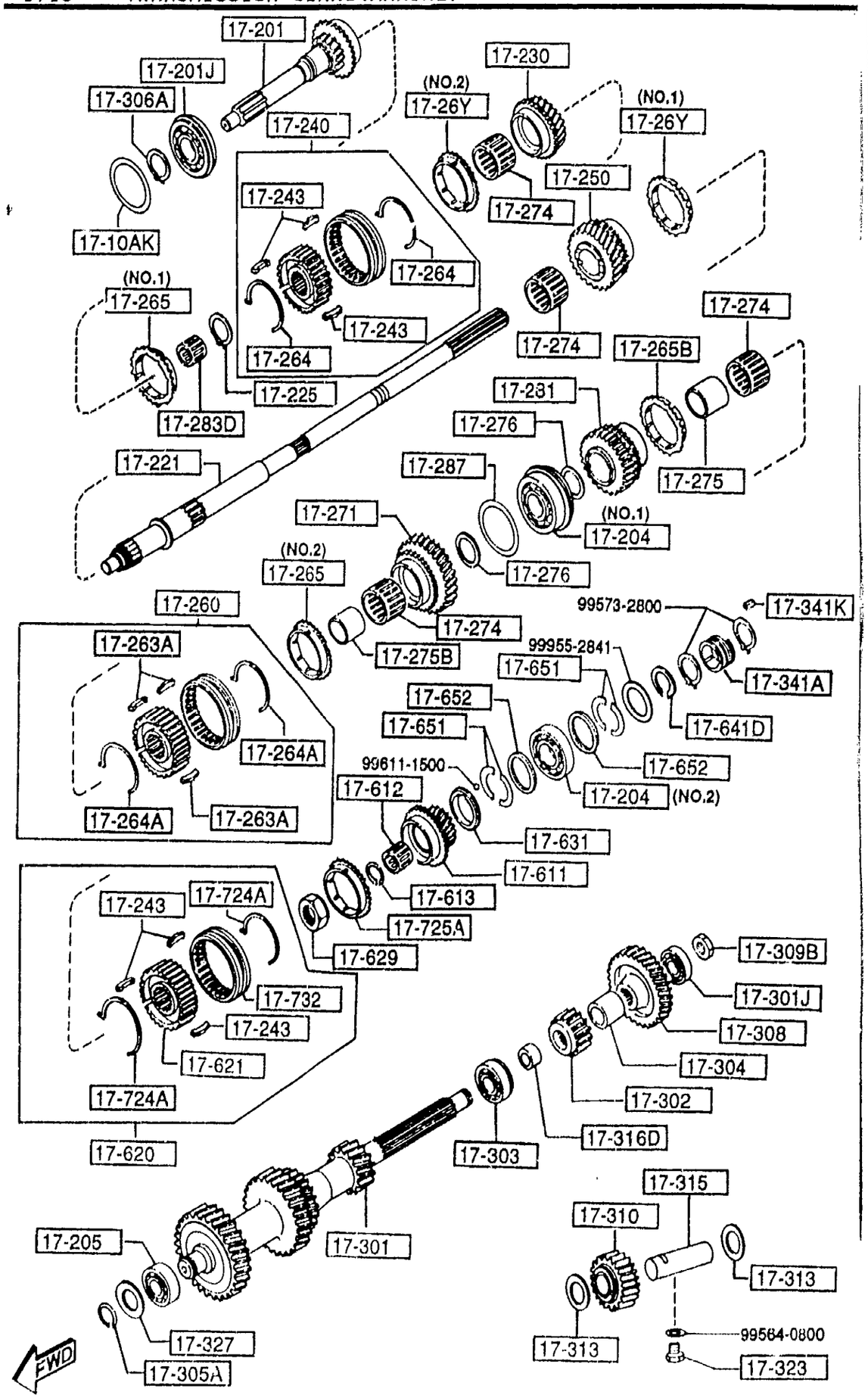

PART NO.	QTY	MODEL/RESTRICTION	MODEL/RESTRICTION	MODEL/RESTRICTION	FROM-TO
CONT'D					
0839-17-277	2	T=3MM			
0839-17-278	1	T=3.5MM			
17-281		GEAR,REVERSE			
R505-17-281	1				
17-283D		BEARING,NEEDLE			
R502-17-283	1				
17-287		SHIM,ADJUST			
0839-17-287	2	T=0.1MM			
0839-17-288	1	T=0.3MM			
17-301		GEAR,COUNTER SHAFT			
R525-17-301	1				
17-301J		BEARING,BALL			
R501-17-299	1				
17-302		GEAR,COUNTER REVERSE			
R504-17-302A	1				
17-303		BEARING,BALL			
0821-17-303	1				
17-304		SPACER			
R501-17-304	1				
17-305A		RING,RETAINING-BALL BEARING			
0839-17-305B	1				
17-306A		RING,SNAP			
0727-17-306	1				
17-308		GEAR,COUNTER			
R524-17-308	1				
17-309B		NUT,LOCK-COUNTER SHAFT BR			

1-K 7

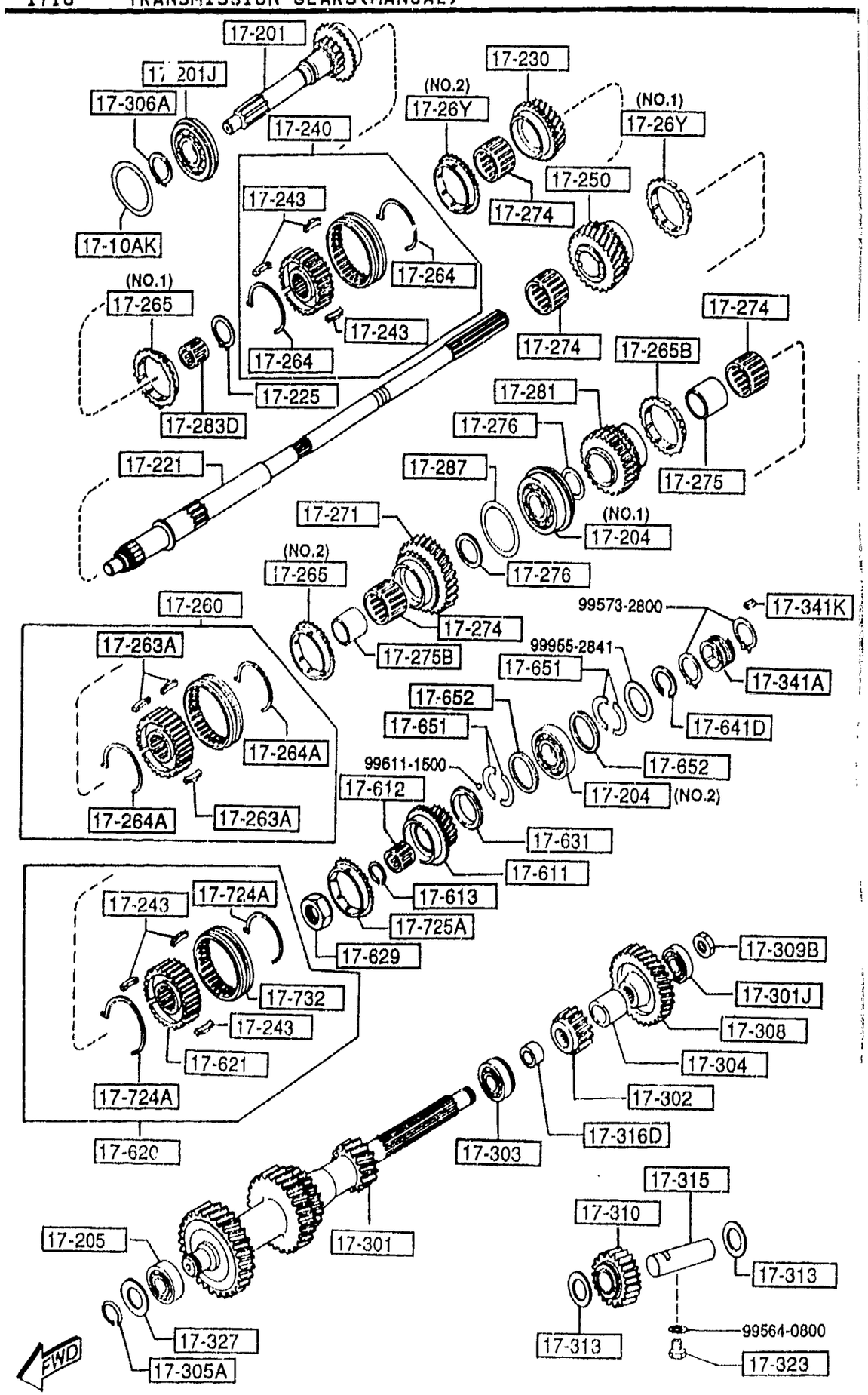

PART NO.	QTY	MODEL/RESTRICTION	MODEL/RESTRICTION	MODEL/RESTRICTION	FROM-TO
CONT'D					
M501-17-309	1				
17-310		GEAR,REVERSE IDLE			
R505-17-310B	1				
17-313		WASHER,THRUST-REVERSE IDLE G.			
0821-17-313	2				
17-315		SHAFT,REV. IDLE GEAR			
0884-17-315	1				
17-316D		SPACER			
R502-17-316	1				
17-323		BOLT SET			
4069-17-323	1				
17-327		SHIM,ADJUST-COUNTER SHAFT GEAR			
0305-17-327	2	T=0.1MM			
0305-17-328	1	T=0.3MM			
17-341A		GEAR,SPEEDO.DRIVE			
R502-17-341A	1				
17-341K		KEY			
M501-17-342	1				
17-611		GEAR,OVER TOP			
R523-17-610	1				
17-612		BEARING,NEEDLE			
R501-17-612	1				
17-613		RING,RETAINING			
R501-17-613	1				
17-620		HUB SET,CLUTCH-O.T. & REV			
R504-17-620	1				

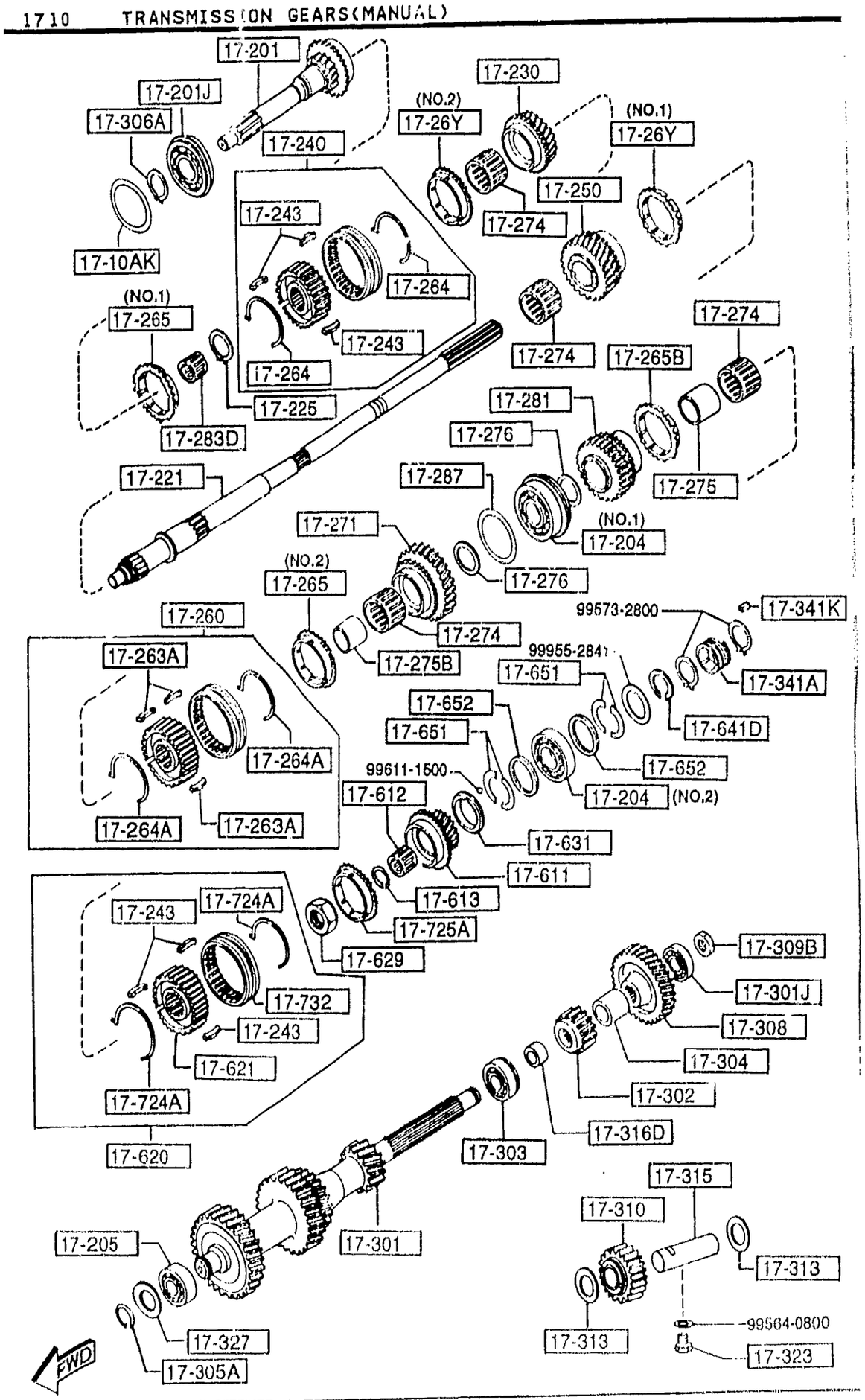

PART NO.	QTY	MODEL/RESTRICTION	MODEL/RESTRICTION	MODEL/RESTRICTION	FROM-TO
17-621		HUB,CLUTCH			
R502-17-621A	1				
17-629		NUT,LOCK-CLUTCH HUB			
3648-17-629	1				
17-631		WASHER,THRUST LOCK-OVER TOP G.			
R501-17-631A	1	T=6.4MM			
R501-17-632A	1	T=6.5MM			
R501-17-633A	1	T=6.6MM			
R501-17-634A	1	T=6.7MM			
R501-17-635	1	T=6.3MM			
R501-17-636	1	T=6.2MM			
17-641D		RING,SNAP			
0821-17-641B	1				
17-651		WASHER,THRUST			
M502-17-651	4	T=3MM			
M502-17-653	2	T=3.1MM			
M502-17-654	2	T=3.2MM			
M502-17-655	2	T=2.9MM			
17-652		RING,THRUST WASHER			
M502-17-652	2				
17-724A		SPRING,SYNCHRO.KEY			
W501-17-724	2				
17-725A		RING,SYNCHRONIZER			
W501-17-725B	1				
17-732		SLEEVE,CLUTCH HUB			

1-M 7

1710 TRANSMISSION GEARS(MANUAL)

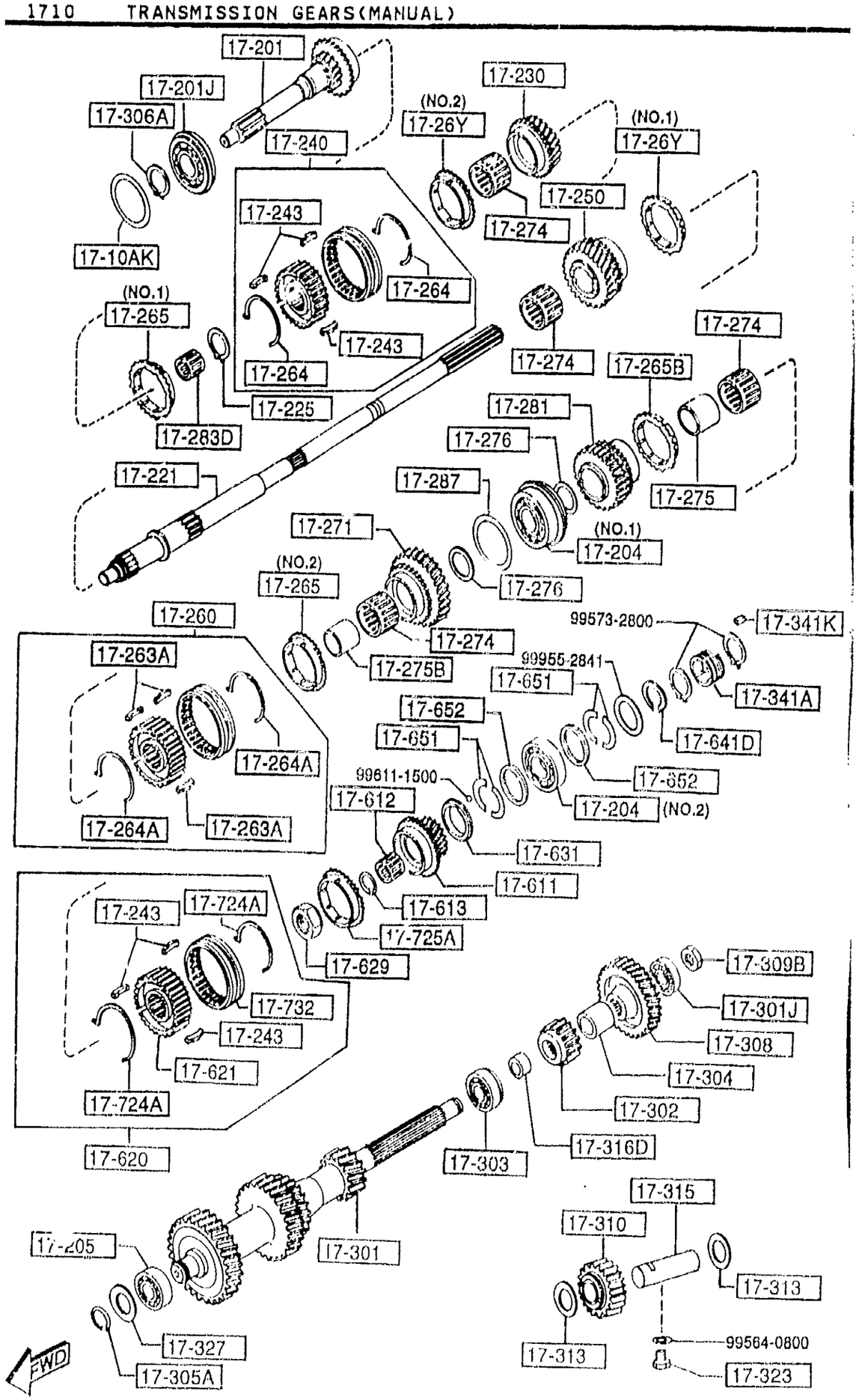

PART NO.	QTY	MODEL/RESTRICTION	MODEL/RESTRICTION	MODEL/RESTRICTION	FROM-TO
CONT'D					
R501-17-732	1				

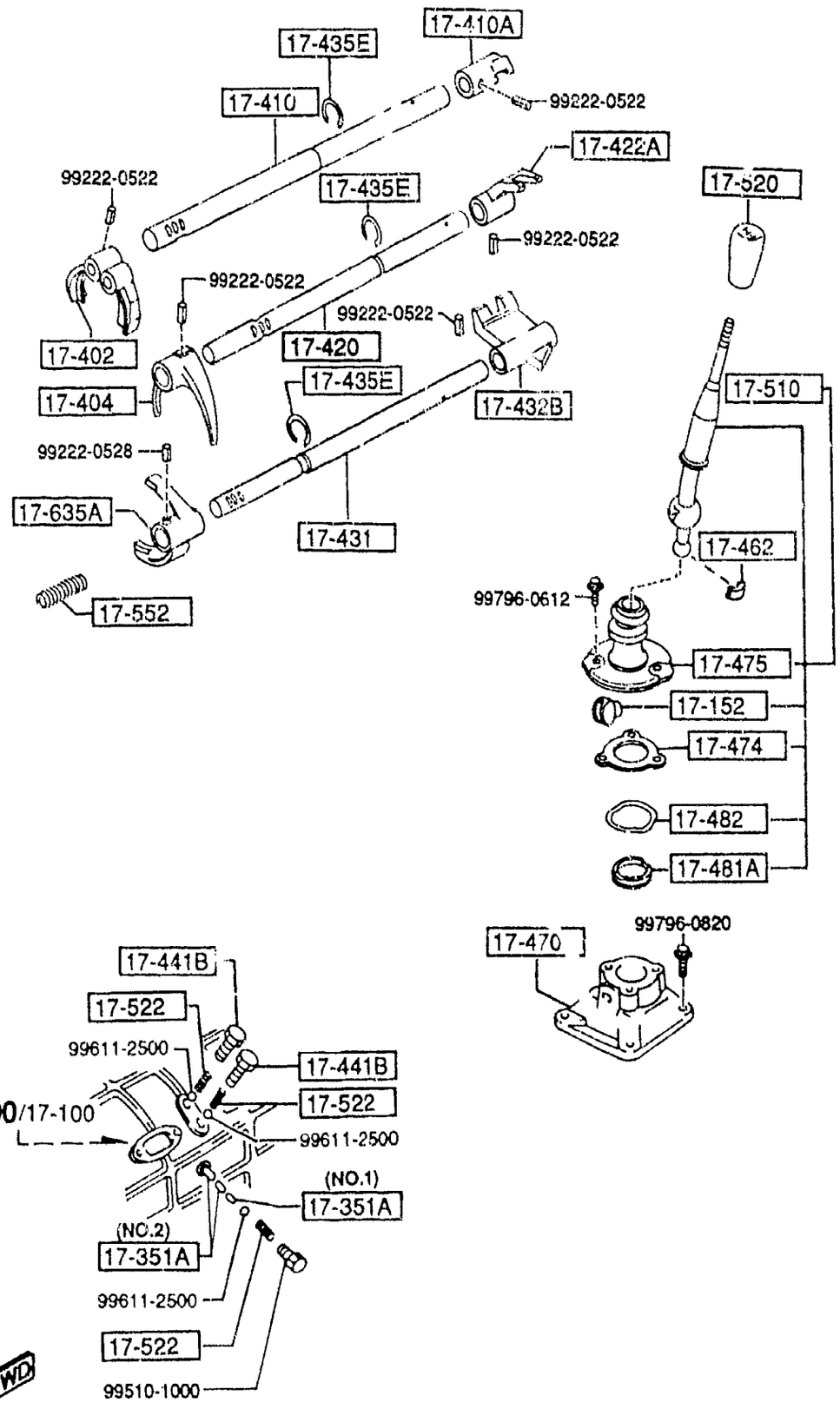

PART NO.	QTY	MODEL/RESTRICTION	MODEL/RESTRICTION	MODEL/RESTRICTION	FROM-TO
17-152		BUSH			
M501-17-515	2				
17-351A		PIN,INTER LOCK			
R501-17-351	1	(ILLUST. NO.1)			
0114-17-351	2	(ILLUST. NO.2)			
17-402		FORK,SHIFT(1ST&2ND)			
R522-17-402	1				
17-404		FORK,SHIFT(3RD&4TH)			
R501-17-404B	1				
17-410		ROD,SHIFT(1ST&2ND)			
R522-17-411	1				
17-410A		END,S/ROD(1ST&2ND)			
R502-17-412A	1				
17-420		ROD,SHIFT(3RD&4TH)			
R522-17-421	1				
17-422A		END,S/ROD(3RD&4TH)			
R506-17-422	1				
17-431		ROD,SHIFT-OVER TOP & REVERSE			
R512-17-431A	1				-3906
AN(R512-17-431B)					
R512-17-431B	1				3906-
17-432B		END,SHIFT ROD(O/TOP& REV.)			
R513-17-432	1				
17-435E		RING,RETAINING			
R502-17-435	3				
17-441B		PLUG,CAP			
0221-17-441A	2				
17-462		SHEET,SPRING			
0398-17-462A	1				

3906 FD333*-300440

1720 CHANGE CONTROL SYSTEM (MANUAL)

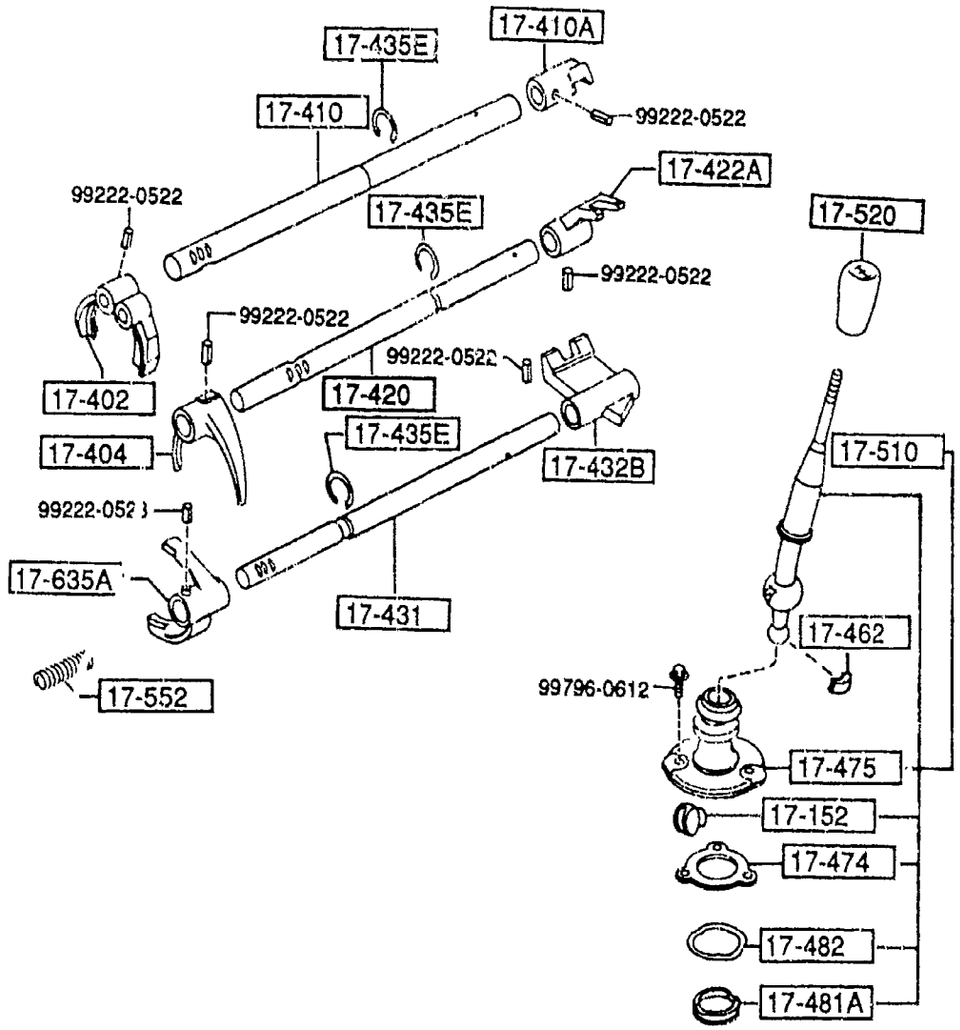

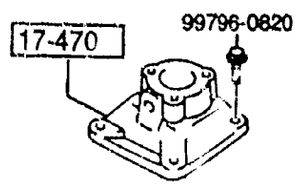

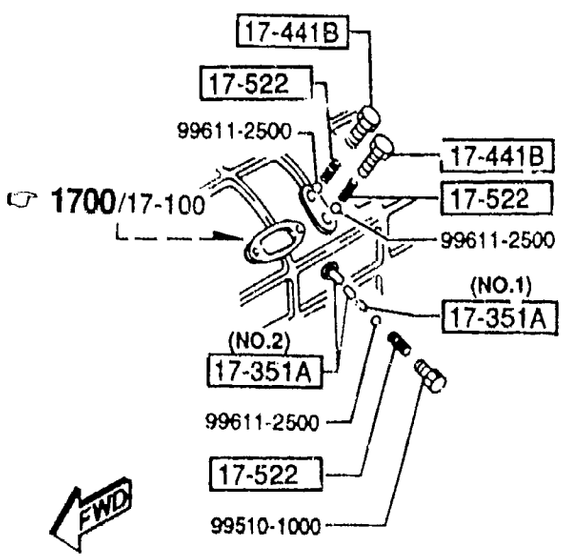

PART NO.	QTY	MODEL/RESTRICTION	MODEL/RESTRICTION	MODEL/RESTRICTION	FROM-TO
17-470		CASE,CHANGE CONTROL			
R504-17-470A	1				
17-474		GASKET,COVER PLATE			
0303-17-474	1				
17-475		BOOT,DUST-CHANGE LEVER			
M513-17-480A	1				
17-481A		BUSH,CHANGE			
R503-17-481	1				
17-482		WASHER,WAVE-CHANGE CONT.CASE			
M505-17-482	1				
17-510		LEVER,CHANGE			
R507-17-510A	1				
17-520		KNOB,CHANGE LEVER			
R503-17-520B	1				
00	INT-	FE5 FE6 FE7 BLACK			
17-522		SPRING			
0103-17-411	3	5TH & REVERSE			
17-552		SPRING			
R501-17-552	1				
17-635A		FORK,SHIFT-5TH & REVERSE			
R505-17-406	1				

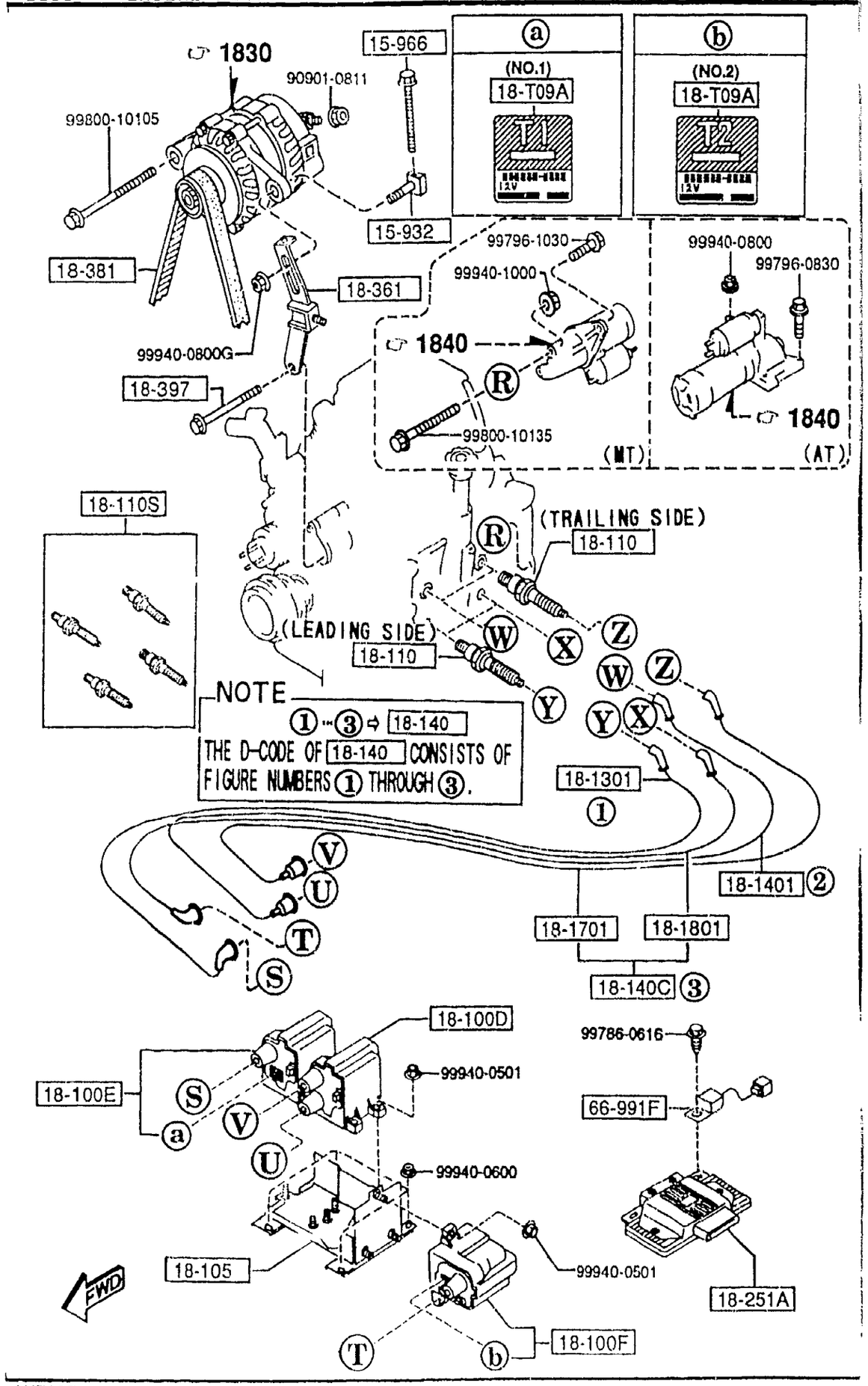

PART NO.	QTY	MODEL/RESTRICTION	MODEL/RESTRICTION	MODEL/RESTRICTION	FROM-TO
15-932		SHAFT,PULLEY			
NF01-15-932	1				
15-966		BOLT,ADJUST			
N390-15-966	1				
18-T09A		LABEL,IG. COIL			
N3A1-18-T09	1	(ILLUST. NO.1)			
N3A2-18-T09	1	(ILLUST. NO.2)			
18-100D		COIL,IGNITION-LEADIN G			
N3A3-18-100	1	LEADING			
18-100E		COIL,IGNITION-TRAILI NG			
N3A1-18-100	1	TRAILING			
18-100F		COIL,IGNITION-TRAILI NG			
N3A2-18-100	1				
18-105		BRACKET,DIST.MODULE			
N3A2-18-105A	1				
18-110		PLUG,SPARK			
N3A1-18-110	2	BUR9EQP NGK (TRAILING SIDE) (OPTION)			
N3A2-18-110	2	BUR7EQP NGK (LEADING SIDE) (STD.)			
N3A3-18-110	2	BUR8EQP NGK (TRAILING SIDE) (OPTION HOT TYPE)			
N3A4-18-110	2	BUR6EQP NGK (LEADING SIDE) (OPTION HOT TYPE)			
N328-18-110	2	BUR8EQ NGK (TRAILING SIDE) (OPTION HOT TYPE)			
N329-18-110	2	BUR6EQ NGK (LEADING SIDE) (OPTION HOT TYPE)			
N342-18-110	2	BUR9EQ NGK (TRAILING SIDE) (STD.)			

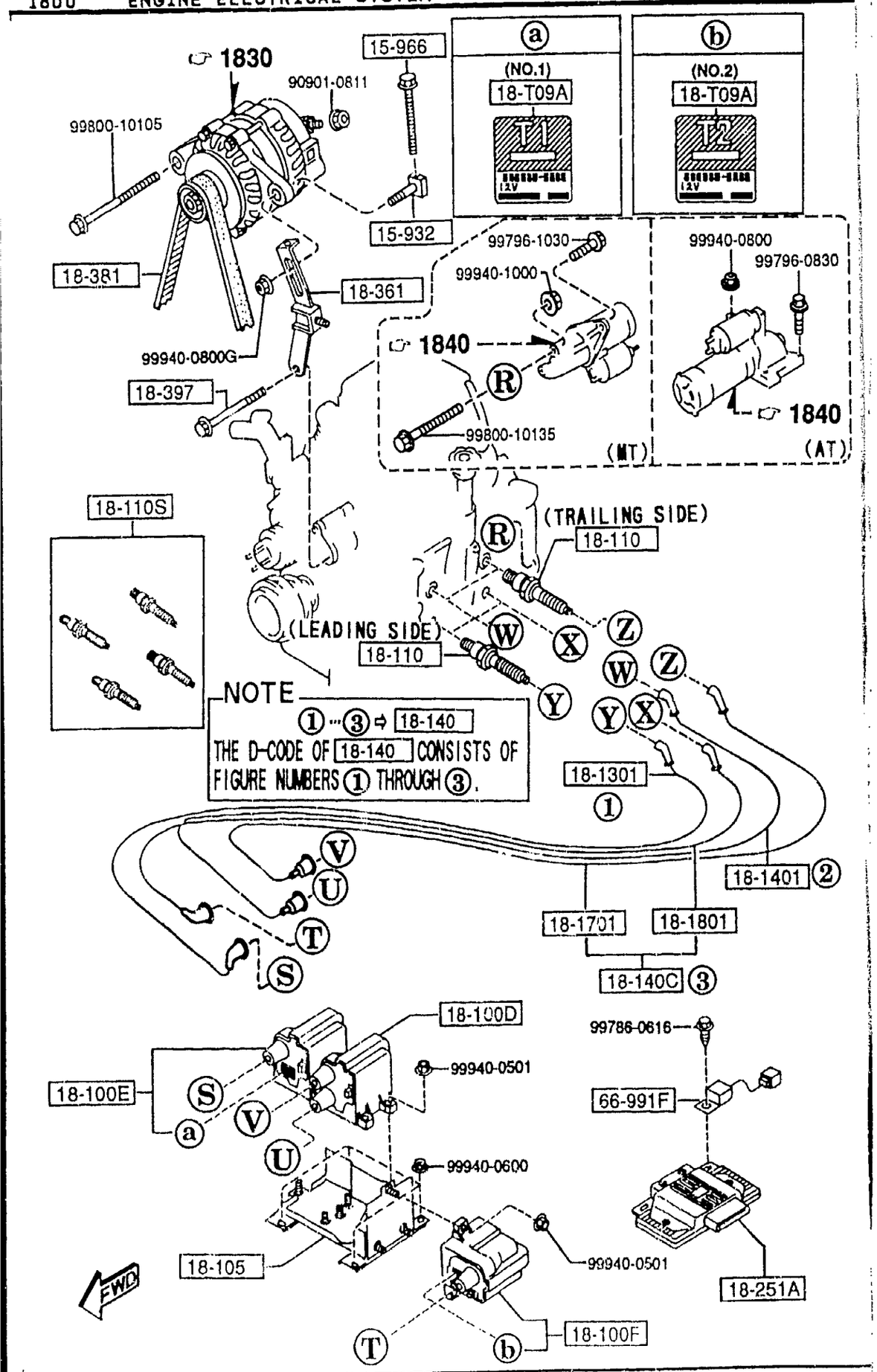

PART NO.	QTY	MODEL/RESTRICTION	MODEL/RESTRICTION	MODEL/RESTRICTION	FROM-TO
CONT'D					
N343-18-110	2	BUR7EQ NGK (LEADING SIDE) (OPTION)			
18-110S		PLUG SET,SPARK			
N3X4-18-110	1	BUR9EQ/BUR7EQ NGK (OPTION)			
N3X5-18-110	1	BUR9EQ/BUR7EQP NGK (STD.)			
18-1301		CORD,HIGH TENSION (T-1)			
N3A1-18-180A	1				
18-140		CORD SET,HI.TENSION			
8BF1-18-140A	1				
18-140C		CORD,HIGH TENSION			
N3A1-18-140	1				
18-1401		CORD,HIGH TENSION (T-2)			
N3A1-18-190A	1				
18-1701		CORD,HIGH TENSION (L-1)			
N3A1-18-T53	1				
18-1801		CORD,HIGH TENSION (L-2)			
N3A1-18-T54	1				
18-251A		IGNITER,IG.COIL-TRALING			
N3A1-18-251	1				
18-361		STRAP,ALTERNATOR			
N3A1-18-360B	1				
18-381		BELT'V'			
N3A1-18-381	1	5PK-1355 (MT)			
N3A2-18-381	1	5PK-1310 (AT)			
18-397		BOLT,FLANGE			
N3A1-18-397	1				

1800 ENGINE ELECTRICAL SYSTEM

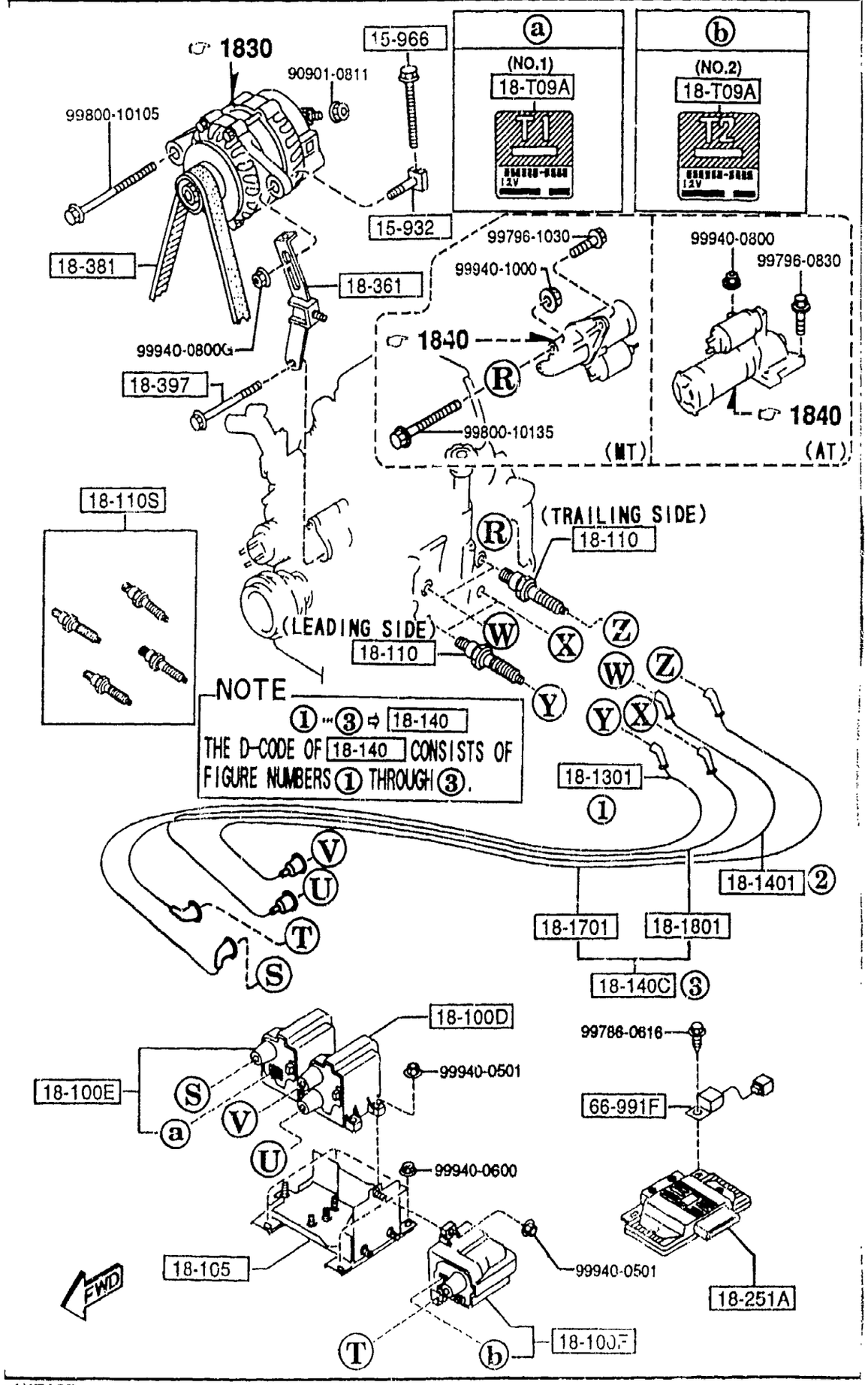

PART NO.	QTY	MODEL/RESTRICTION	MODEL/RESTRICTION	MODEL/RESTRICTION	FROM-TO
+---------+					
| 66-991F |		CONDENSER			
+---------+					
N3A1-66-991	1				

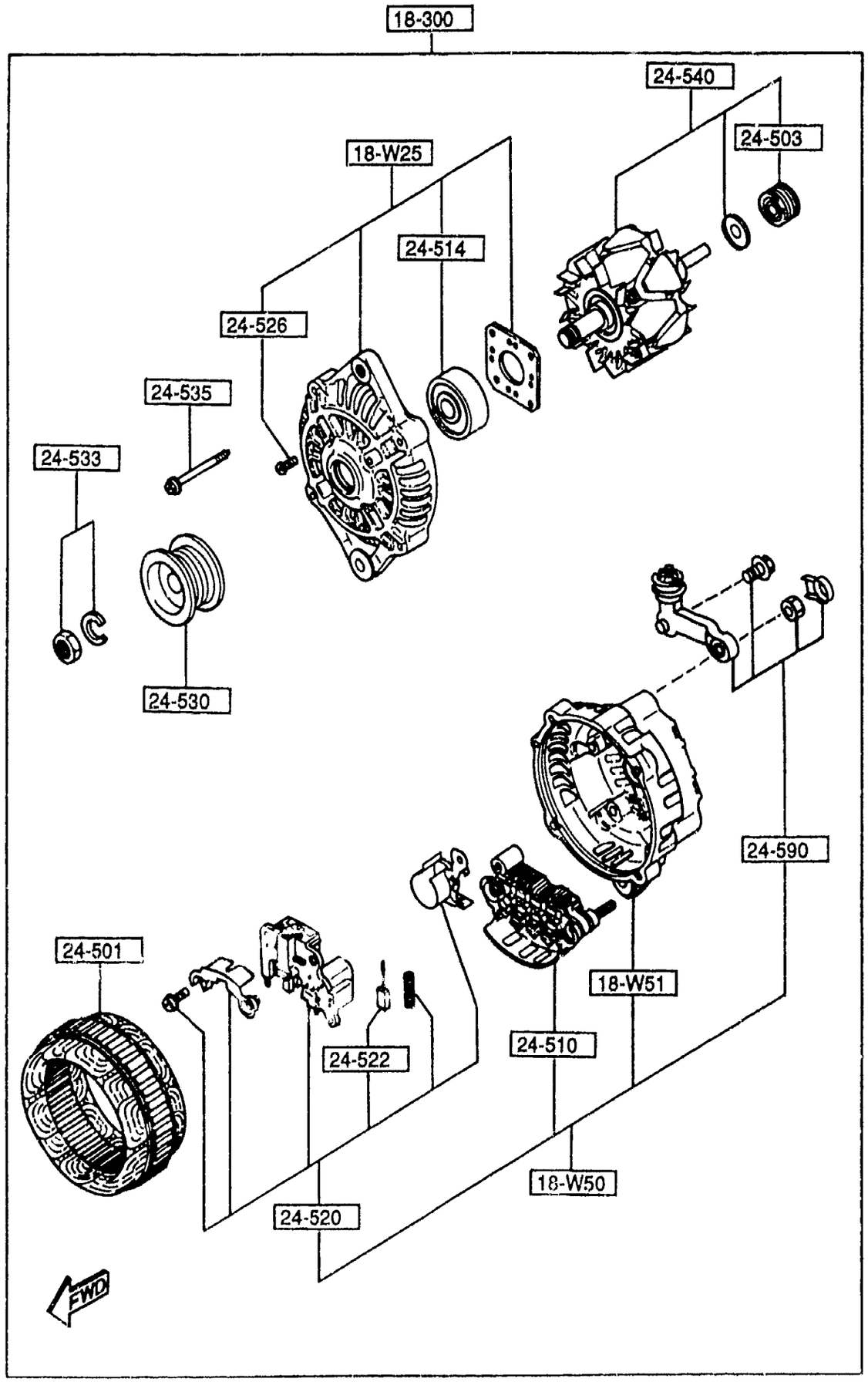

PART NO.	QTY	MODEL/RESTRICTION	MODEL/RESTRICTION	MODEL/RESTRICTION	FROM-TO
18-W25 N3A1-18-W25	1	COVER,FRONT-ALTERNATOR			
18-W50 N3A1-18-W50	1	COVER,REAR-ALTERNATOR			
18-W51 N3A1-18-W51	1	COVER,REAR-ALTERNATOR			
18-300 N3A1-18-300A	1	ALTERNATOR			
24-501 N3A1-18-W45	1	STATOR			
24-503 N336-18-W36	1	BEARING,BALL-ALT. REAR			
24-510 N3A1-18-W60	1	RECTIFIER			
24-514 PN16-18-W27	1	BEARING,BALL-ALT. FRONT			
24-520 JE48-18-W70	1	REGULATOR,VOLTAGE			
24-522 B3C7-18-W77	2	BRUSH			
24-526 RF71-18-W26	1	SCREW SET			
24-530 N390-18-W11	1	PULLEY			
24-533 B3C7-18-W05	1	NUT SET			
24-535 RF71-18-W20	1	SCREW SET			

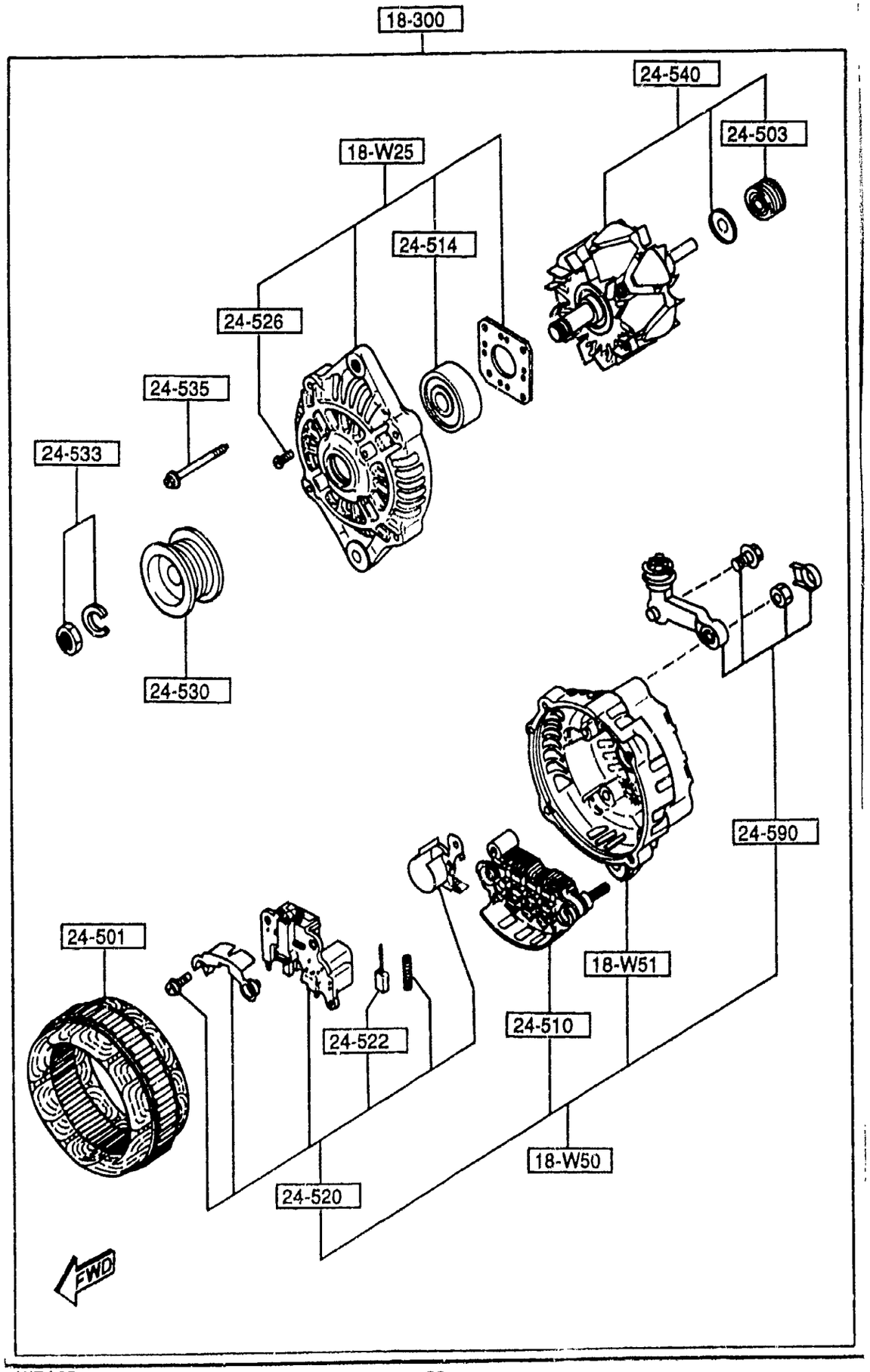

PART NO.	QTY	MODEL/RESTRICTION	MODEL/RESTRICTION	MODEL/RESTRICTION	FROM-TO
+---------+					
| 24-540 |		ROTOR			
+---------+					
N3A1-18-W35	1				
+---------+					
| 24-590 |		TERMINAL SET			
+---------+					
N3A1-18-W80	1				

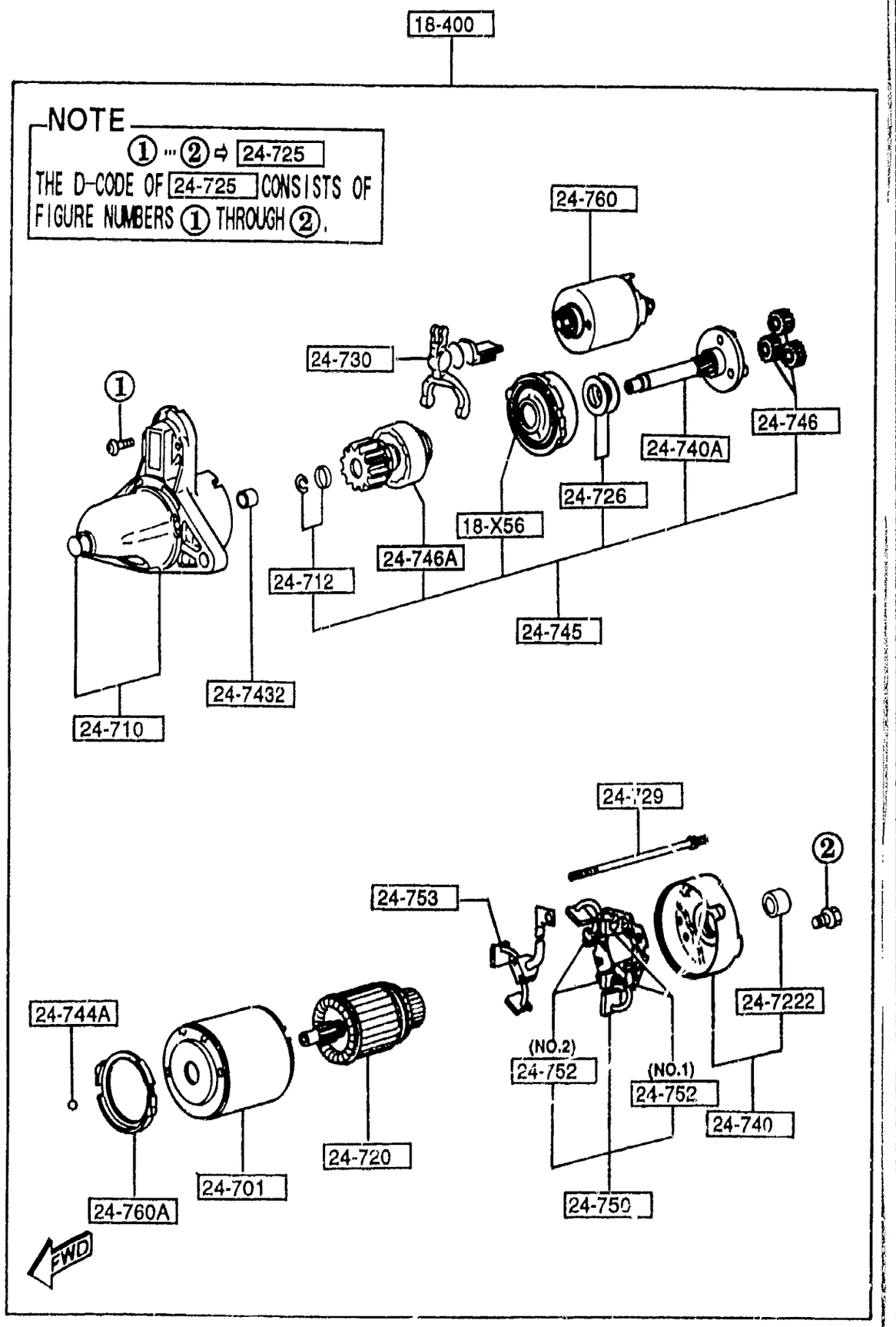

PART NO.	QTY	MODEL/RESTRICTION	MODEL/RESTRICTION	MODEL/RESTRICTION	FROM-TO
18-X56		GEAR,INTERNAL-STARTER			
F225-18-X56	1				
18-400		STARTER			
N3A1-18-400	1				
24-701		YOKE			
N326-18-X65	1				
24-710		BRACKET,FRONT			
N3A1-18-X00	1				
24-712		STOPPER SET			
N326-18-X30	1				
24-720		ARMATURE			
F214-18-X60A	1	NON ASBESTOS			
24-7222		SLEEVE,BEARING-REAR			
N326-18-X62A	1				
24-725		SCREW SET			
E356-18-X95	1				
24-726		WASHER SET			
N326-18-X92	1				
24-729		BOLT			
N326-18-X91	2				
24-730		LEVER			
N326-18-X05	1				
24-740		BRACKET,REAR			
N318-18-X80A	1				-4201
N315-18-X80	1				4201-
24-740A		SHAFT			
N326-18-X40	1				

4201 FD333*-302262

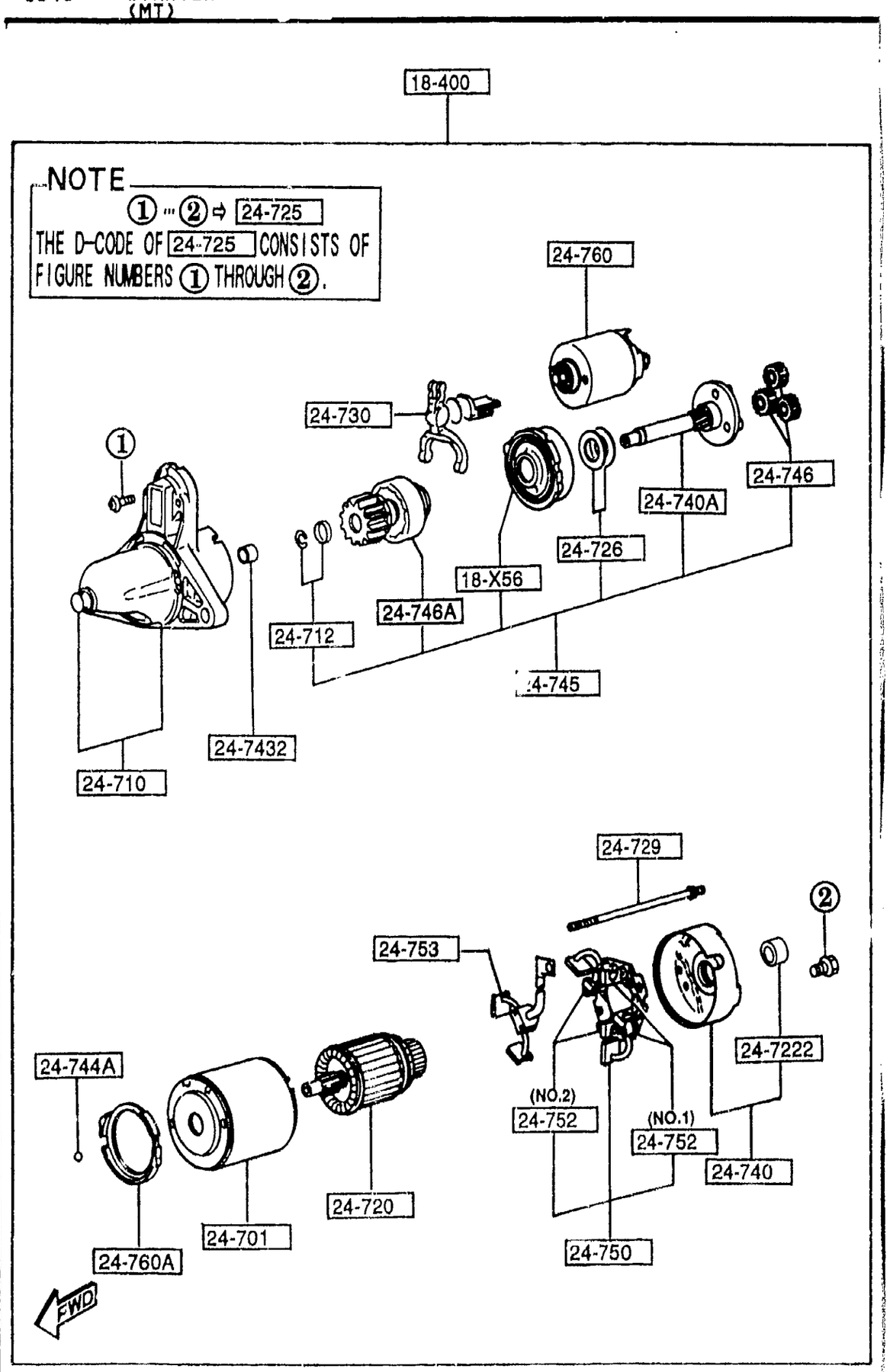

PART NO.	QTY	MODEL/RESTRICTION	MODEL/RESTRICTION	MODEL/RESTRICTION	FROM-TO
24-7432		SLEEVE,BEARING-FRONT			
E356-18-X01	1				
24-744A		BALL,STEEL			
N326-18-X93	1				
24-745		SHAFT,CLUTCH			
N327-18-X20	1				
24-746		GEAR			
N326-18-X57	3				
24-746A		PINION			
N318-18-X25	1				
24-750		HOLDER,BRUSH			
F214-18-X70	1				
24-752		SPRING,BRUSH			
N318-18-X71	2	(ILLUST. NO.1)			
N326-18-X71	2	(ILLUST. NO.2)			
24-753		BRUSH,YOKE			
F214-18-X66	1				
24-760		SWITCH			
N3A1-18-X10	1				-4201
N315-18-X10	1				4201-
24-760A		GASKET			
N326-18-X87	1				

4201 FD333*-302262

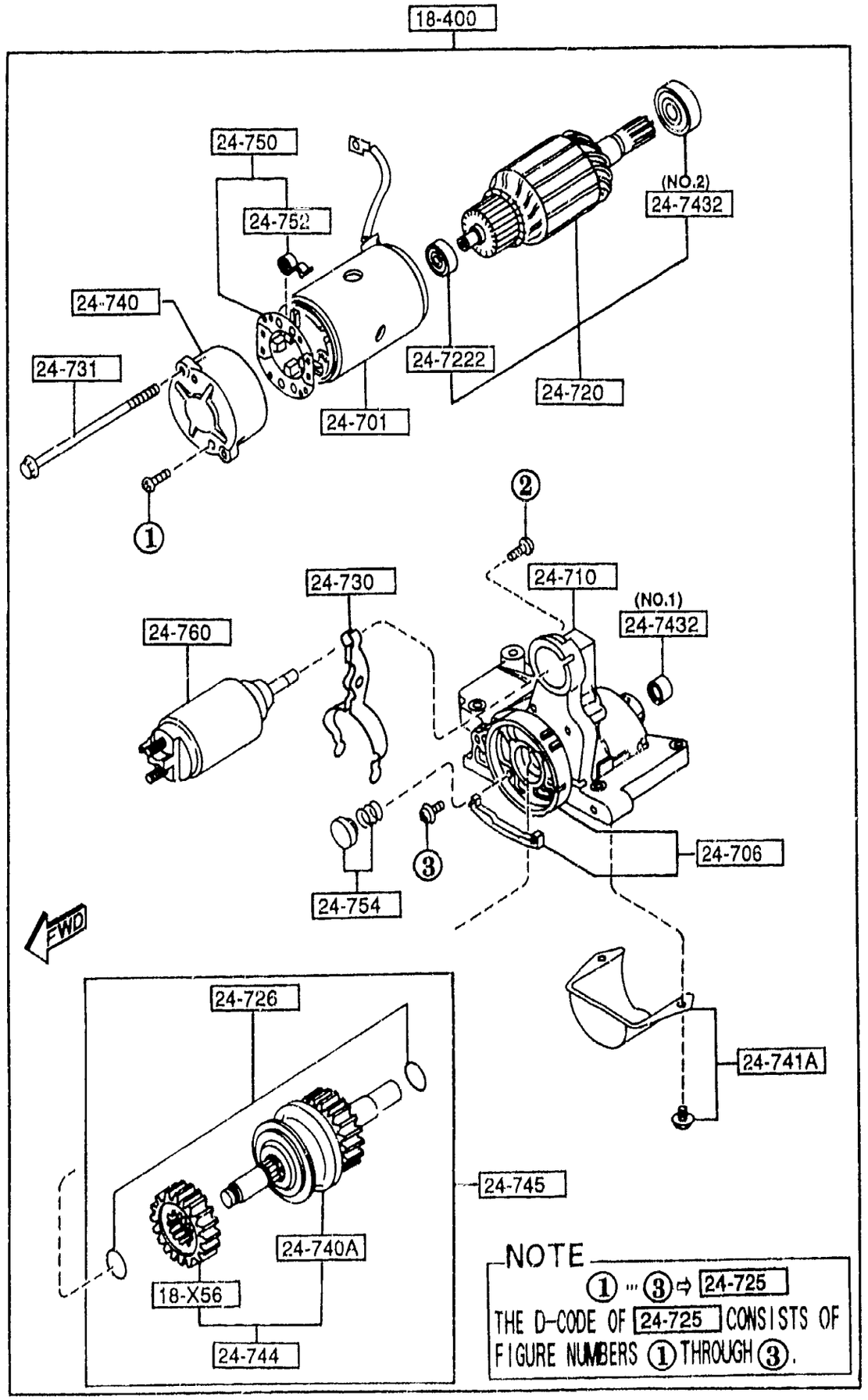

PART NO.	QTY	MODEL/RESTRICTION	MODEL/RESTRICTION	MODEL/RESTRICTION	FROM-TO
18-X56		GEAR,INTERNAL-STARTER			
NF01-18-X56	1				
18-400		STARTER			
NF01-18-400B	1				
24-701		YOKE			
NF01-18-X65	1				
24-706		BRACKET,CENTER			
NF01-18-X75	1				
24-710		BRACKET,FRONT			
NF01-18-X00A	1				
24-720		ARMATURE			
NF01-18-X60A	1				
24-7222		SLEEVE,BEARING-REAR			
8599-24-722	1				
24-725		SCREW SET			
NF01-18-X95	1				
24-726		WASHER SET			
NF01-18-X92	1				
24-730		LEVER			
NF01-18-X05	1				
24-731		BOLT SET			
NF01-18-X90	1				
24-740		BRACKET,REAR			
8599-24-720	1				
24-740A		SHAFT			
NF01-18-X40	1				
24-741A		COVER SET			
NF01-18-X50	1				

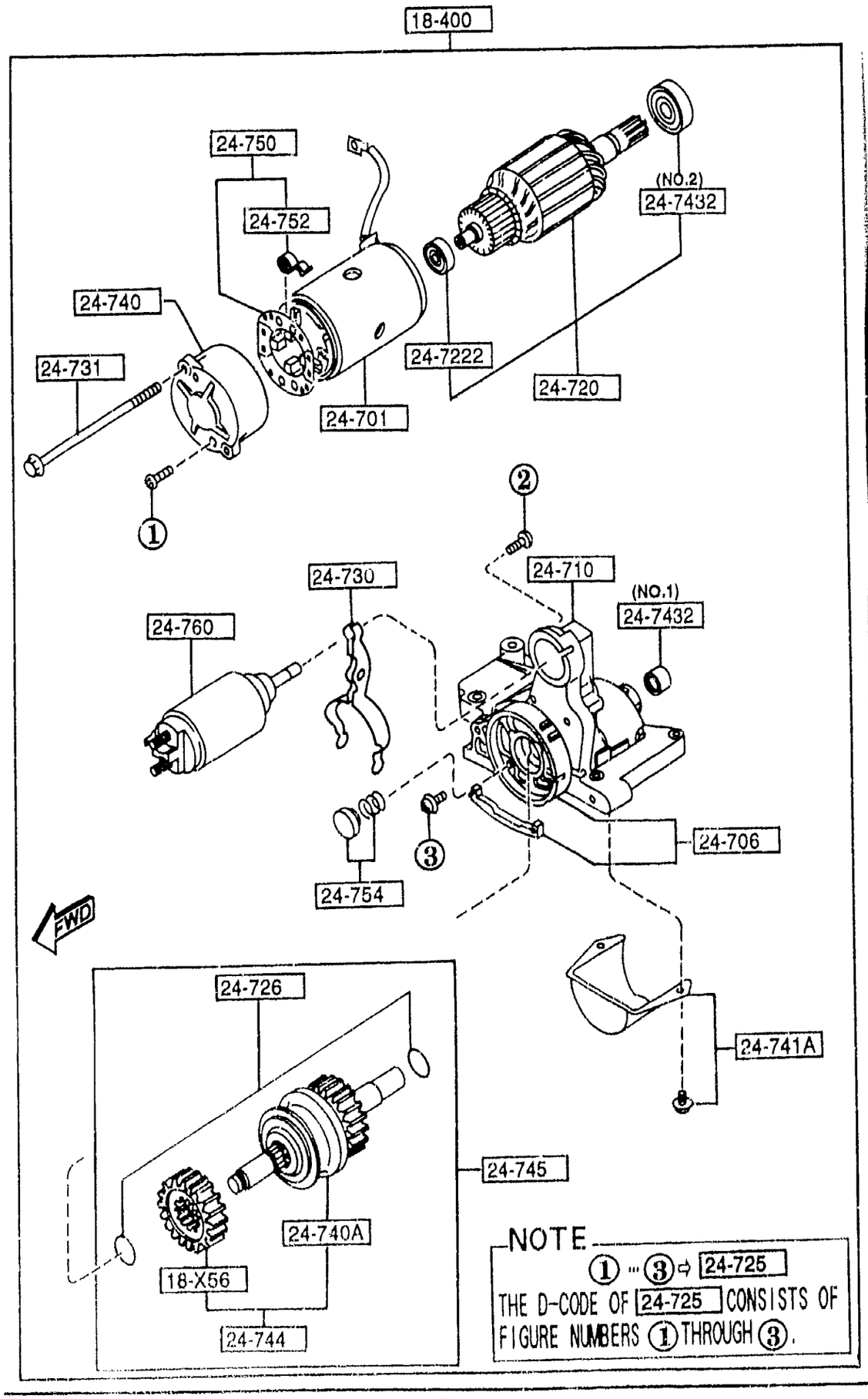

PART NO.	QTY	MODEL/RESTRICTION	MODEL/RESTRICTION	MODEL/RESTRICTION	FROM-TO
24-7432		SLEEVE,BEARING-FRONT			
F210-18-X01	1	(ILLUST. NO.1)			
8599-24-743	1	(ILLUST. NO.2)			
24-744		GEAR SET			
NF01-18-X35	1				
24-745		SHAFT,CLUTCH			
NF01-18-X20	1				
24-750		HOLDER,BRUSH			
NF01-18-X70	1				
24-752		SPRING,BRUSH			
8599-24-752	4				
24-754		SPRING SET			
G601-18-X06	1				
24-760		SWITCH			
NF01-18-X10	1				

1850 BATTERY

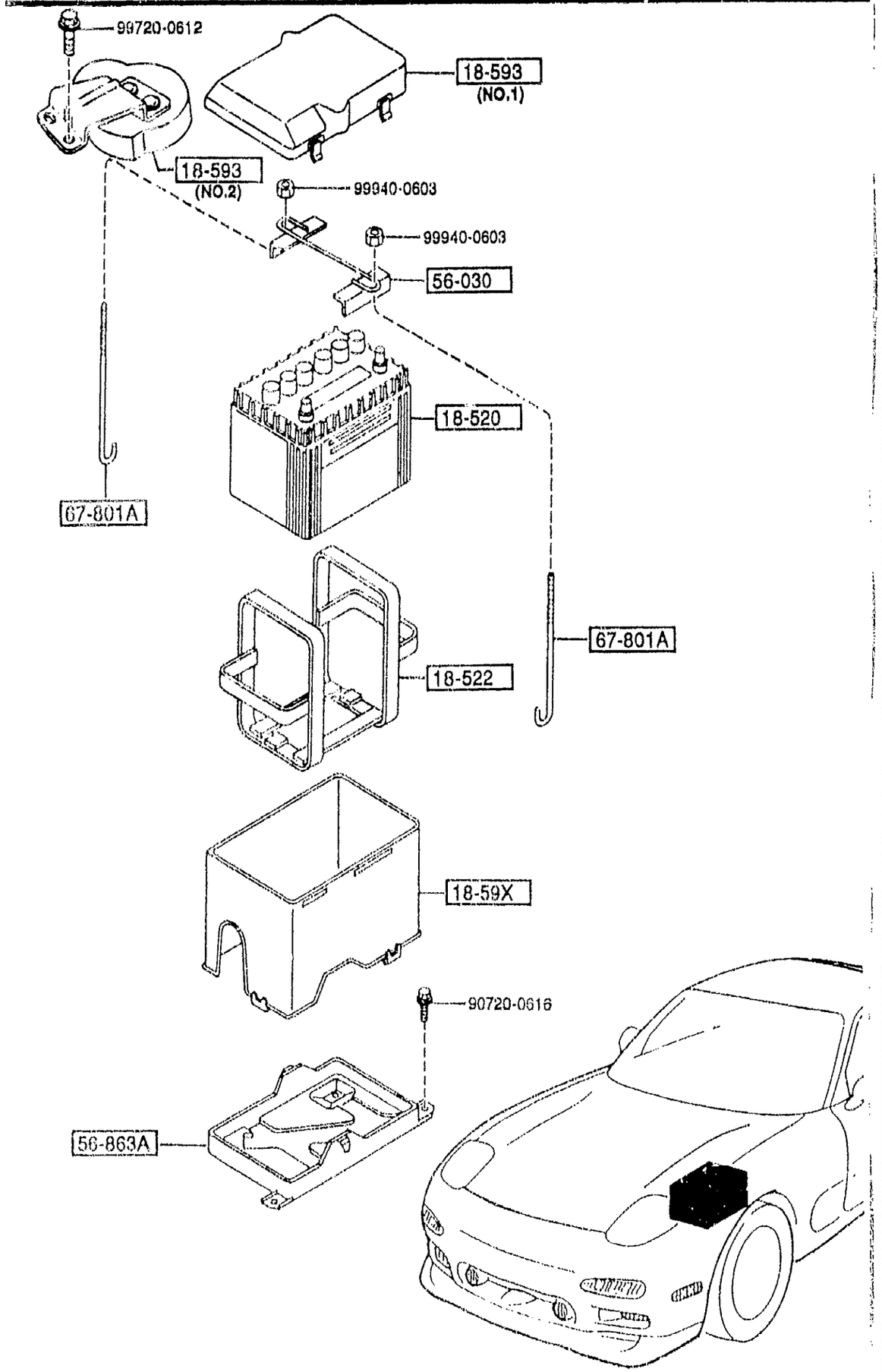

PART NO.	QTY	MODEL/RESTRICTION	MODEL/RESTRICTION	MODEL/RESTRICTION	FROM-TO
18-520		BATTERY			
AM15-18-520A	1	75D26L GS (AT)			
N251-18-520B	1	65D23L GS (MT)			
N252-18-520E	1	65D23L PANASONIC (MT)			
18-522		BAND,BATTERY			
FE50-18-522	1				
18-59X		BOX,BATTERY			
N3A1-18-591E A (N3A1-18-591F)	1				-3C01
N3A1-18-591F	1				3C01-
18-593		COVER,BOX-BATTERY			
N3A1-18-593B	1	MIYAGAWA KASEI (ILLUST. NO.1)			
N3A2-18-593A	1	(ILLUST. NO.2) (W/O AIR CON.)			
56-030		CLAMP,BATTERY			
H384-56-03XA	1				
56-863A		TRAY,BATTERY			
FD01-56-981A	1				
67-801A		BOLT,CLAMP			
0243-56-231	2				

3C01 FD333*-301464

1910 TORQUE CONVERTER,OIL PUMP & PIPINGS (AUTOMATIC)

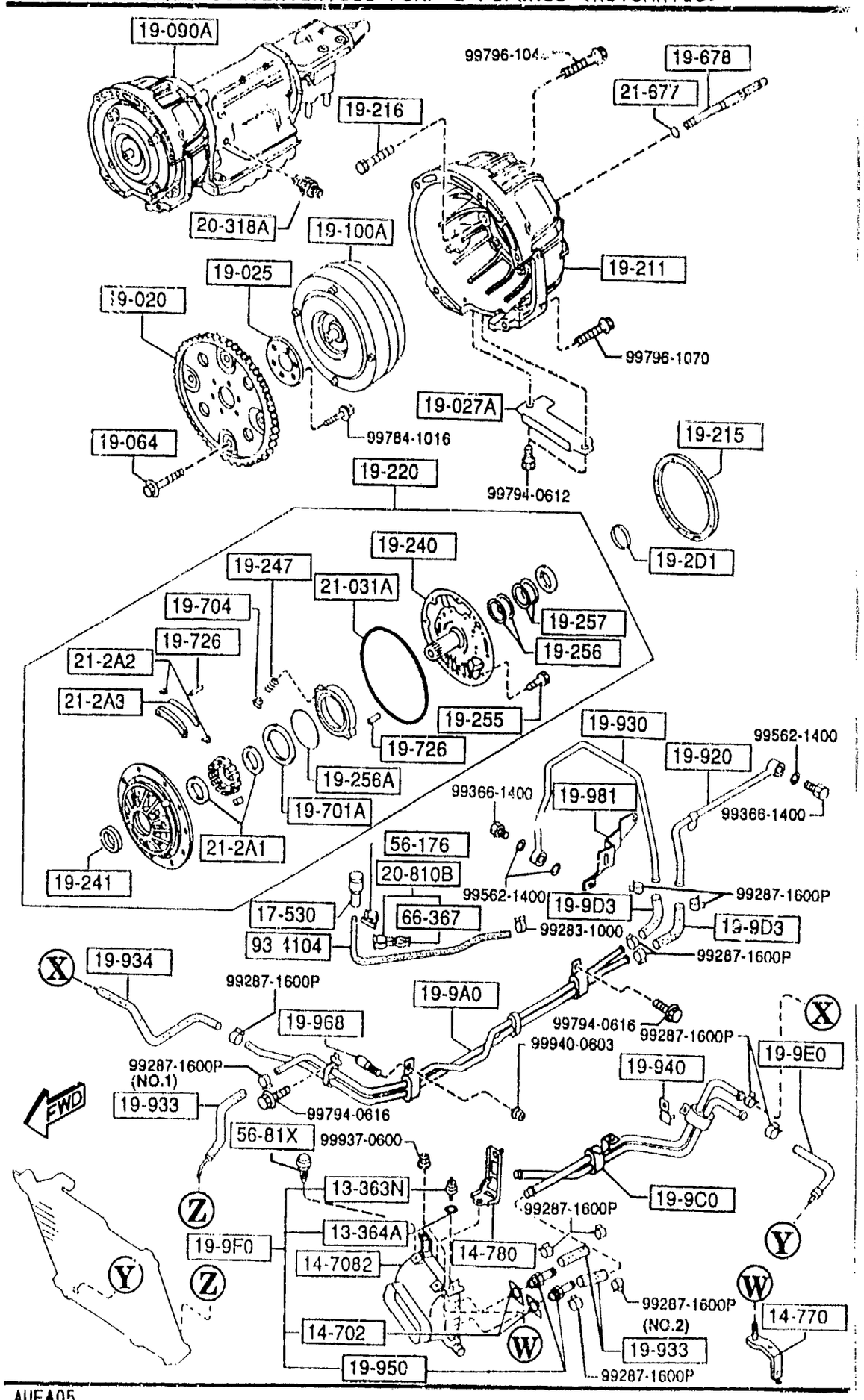

PART NO.	QTY	MODEL/RESTRICTION	MODEL/RESTRICTION	MODEL/RESTRICTION	FROM-TO
13-363N		RUBBER,MOUNTING			
NF01-13-363	3				
13-364A		SPACER			
NF01-13-364	3				
14-702		GASKET			
N3A1-14-702	1				-4401
*N3A1-14-702	2				4401-
14-7082		DUCT,OIL COOLER			
N3A2-14-708	1				
14-770		BRACKET,OIL COOLER			
N3A2-14-770B	1				
14-780		BRACKET,OIL COOLER			
N3A2-14-780B	1				
17-530		BREATHER,AIR-T/MISSION			
0884-17-530	1				
19-020		PLATE,DRIVE			
BV40-19-020	1				
19-025		PLATE,BACKING			
0B42-19-025	1				
19-027A		COVER,UNDER			
BV65-19-027	1				
19-064		BOLT			
3649-19-064A	4				
19-090A		T/MISSION CPT.			
BV65-19-090G A (BV65-19-090H)	1				-4120
BV65-19-090H	1				4120-
19-100A		CONVERTER,TORQUE			
BV65-19-100	1				

4120 FD333*-302035
4401 FD333*-303310

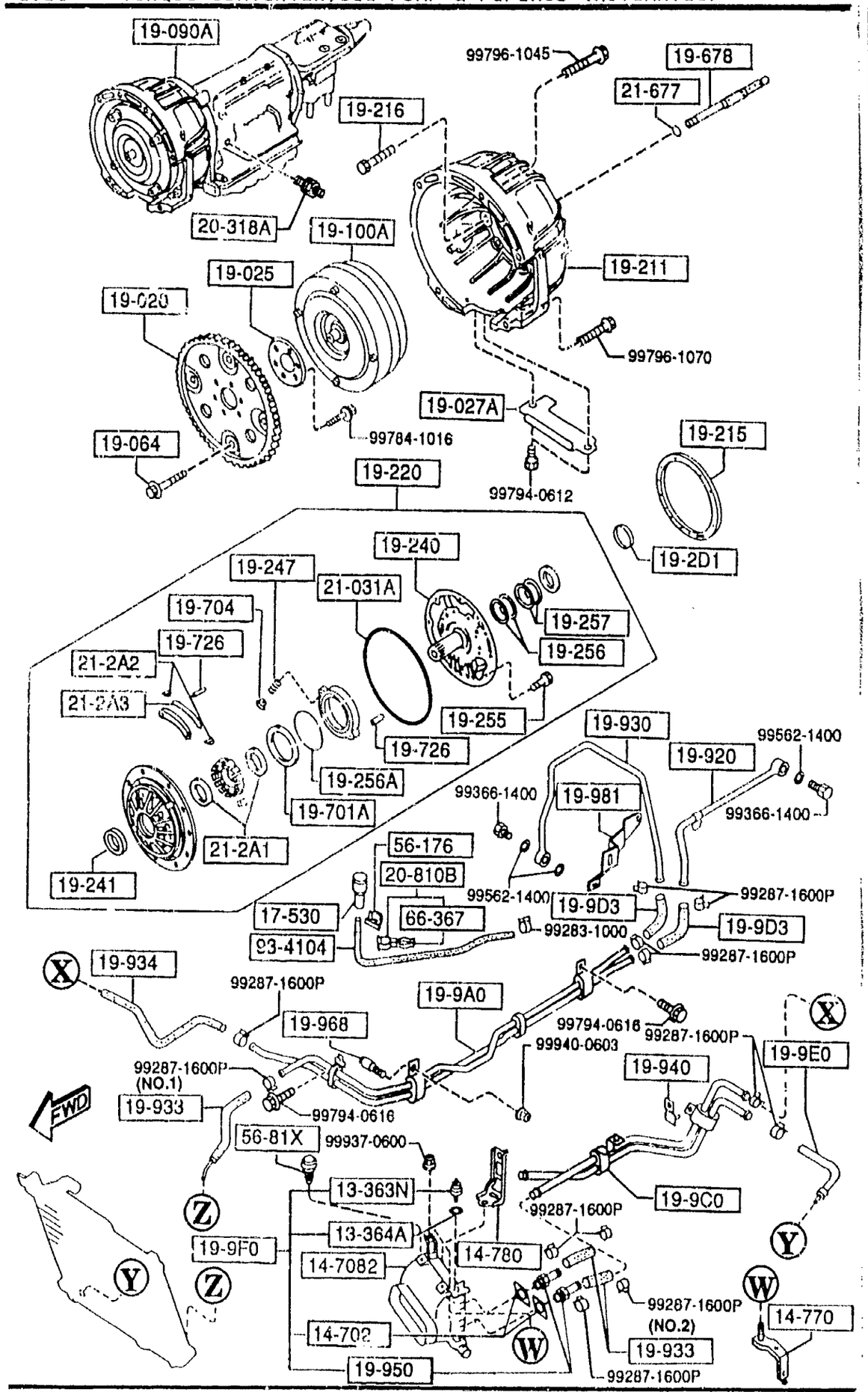

AUFA05

PART NO.	QTY	MODEL/RESTRICTION	MODEL/RESTRICTION	MODEL/RESTRICTION	FROM-TO
19-2D1		WASHER,THRUST			
BV11-19-2D1	1	T=0.7MM			
BV11-19-2D2	1	T=0.9MM			
BV11-19-2D3	1	T=1.1MM			
BV11-19-2D4	1	T=1.3MM			
BV11-19-2D5	1	T=1.5MM			
BV11-19-2D6	1	T=1.7MM			
BV11-19-2D7	1	T=1.9MM			
19-211		HOUSING,CONVERTER			
BV65-19-210	1				
19-215		GASKET,OIL PUMP			
BV60-19-221	1				
19-216		BOLT			
BT40-19-216	10				
19-220		PUMP,OIL			
BV56-19-220	1				
19-240		COVER,OIL PUMP			
BV56-19-240	1				
19-241		SEAL,OIL			
BV11-19-241	1				
19-247		SPRING			
BV11-19-247	1				
19-255		BOLT			
BV11-19-255	8				
19-256		RING,SEAL			
BV11-19-256	2				

1910 TORQUE CONVERTER,OIL PUMP & PIPINGS (AUTOMATIC)

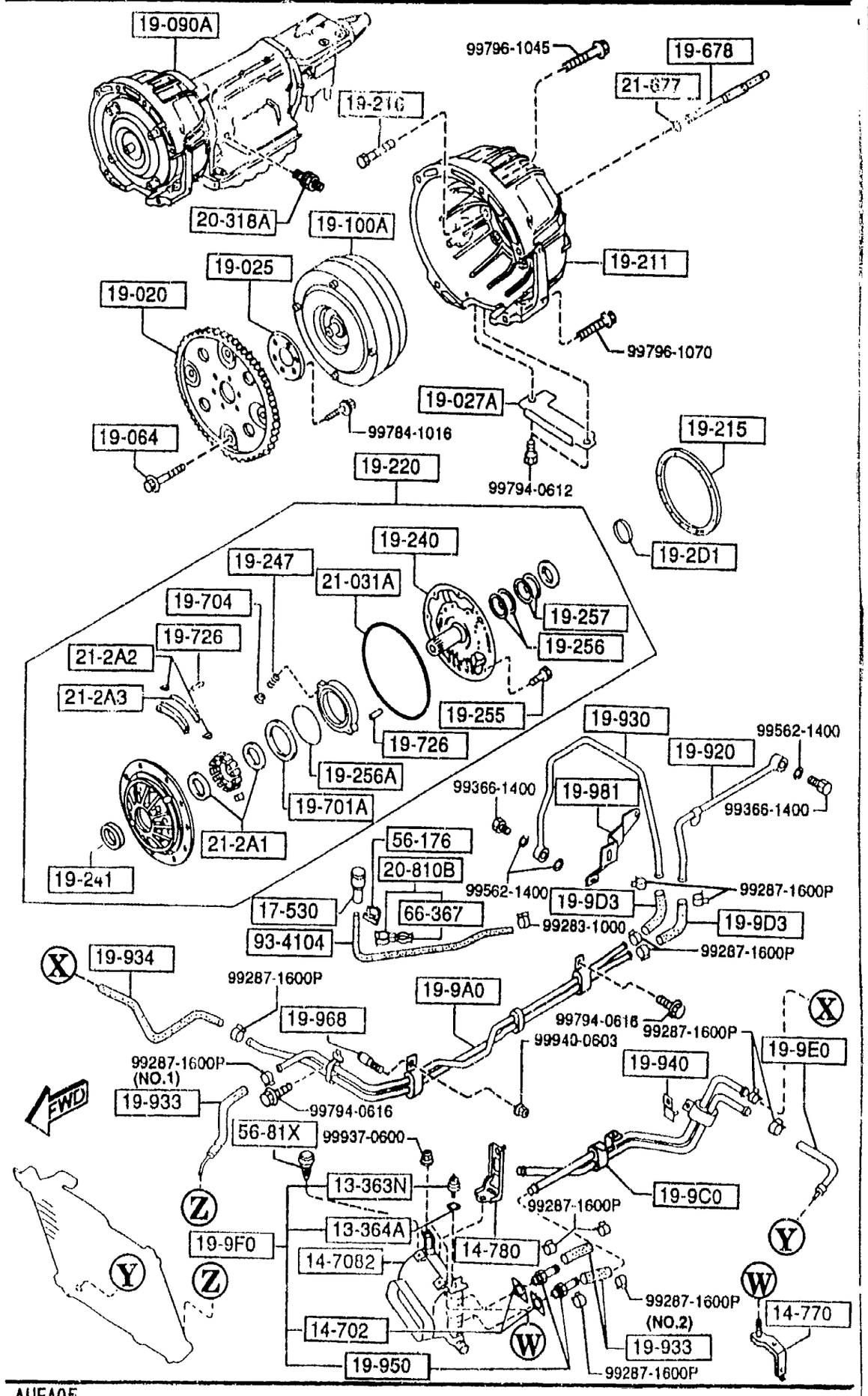

PART NO.	QTY	MODEL/RESTRICTION	MODEL/RESTRICTION	MODEL/RESTRICTION	FROM-TO
19-256A BV11-19-242	1	RING,SEAL			
19-257 BV11-19-257	2	RING,SEAL			
19-678 BV65-21-678	1	SHAFT,INPUT			
19-701A BV11-19-701	1	SEAL,RING			
19-704 BV11-19-704	1	RETAINER			
19-726 BV11-19-726	2	PIVOT,ROLLER			
19-9A0 BV65-19-9A0	1	PIPE,OIL-OILPUMP			
19-9C0 BV65-19-9C0	1	PIPE,OIL			
19-9D3 FU31-19-9D3A	2	HOSE,OIL			
19-9E0 BV65-19-9E0	1	HOSE,OIL			
19-9F0 BV65-19-9F0A	1	COOLER,OIL			
19-920 BV65-19-920	1	PIPE,OIL			
19-930 BV65-19-930	1	PIPE,OIL			
19-933 BV65-19-933A	1	HOSE,OIL (ILLUST. NO.1)			

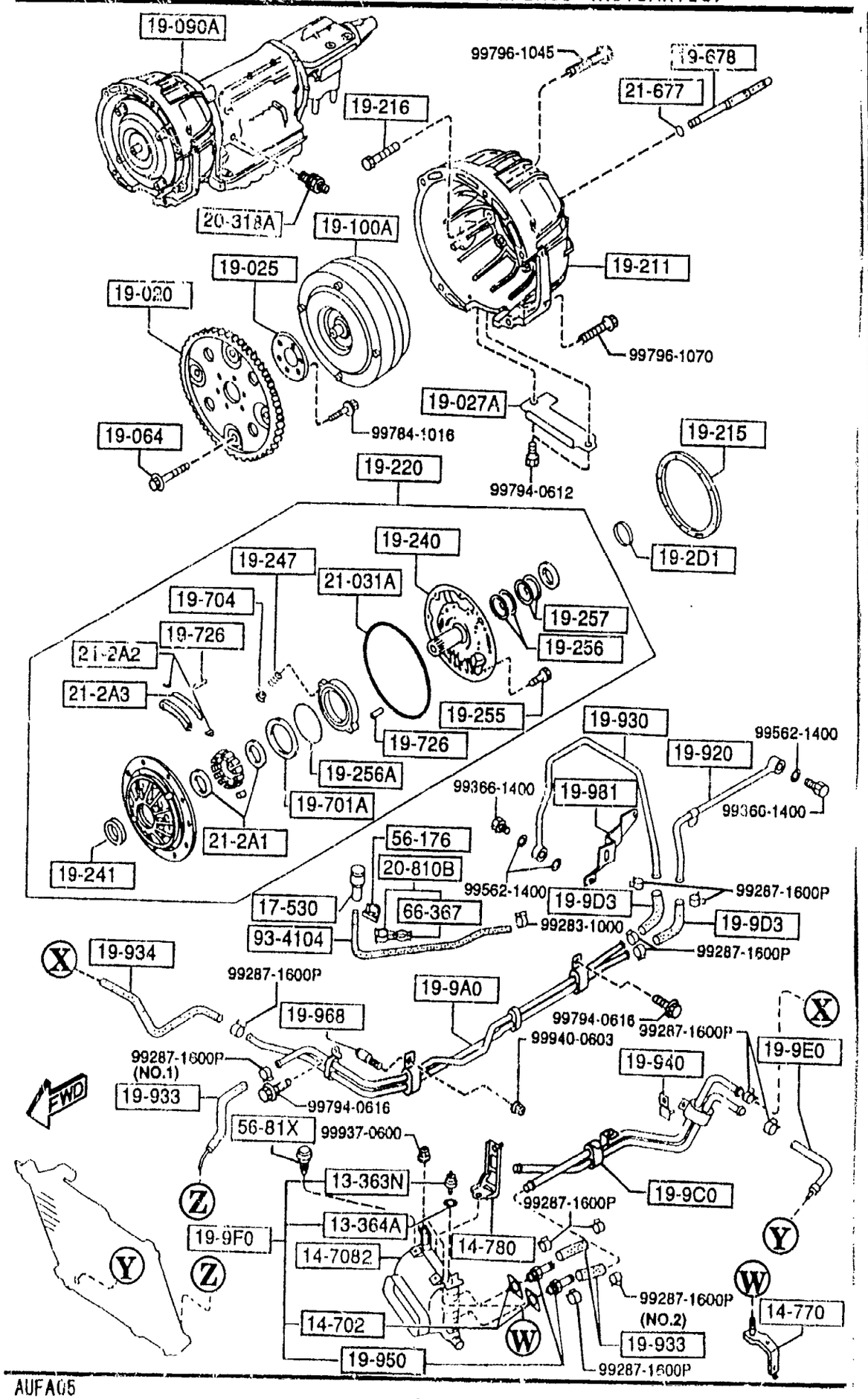

AUFA05

PART NO.	QTY	MODEL/RESTRICTION	MODEL/RESTRICTION	MODEL/RESTRICTION	FROM-TO
CONT'D					
FU9E-19-933	2	(ILLUST. NO.2)			
+---------+					
| 19-934 |		HOSE,OIL			
+---------+					
BV66-19-934	1				
+---------+					
| 19-940 |		BRACKET,PIPE			
+---------+					
BV65-19-940	1				
+---------+					
| 19-950 |		PIPE,OIL			
+---------+					
BV65-19-950A	2				
+---------+					
| 19-968 |		STUD			
+---------+					
BV65-19-968	1				
+---------+					
| 19-981 |		BRACKET			
+---------+					
BV65-19-981A	1				
+---------+					
| 20-318A |		BOLT			
+---------+					
BU27-19-838	1				
+---------+					
| 20-810B |		CLIP			
+---------+					
E5D5-20-810	1				
+---------+					
| 21-031A |		RING,'O'			
+---------+					
BV11-21-031	1				
+---------+					
| 21-2A1 |		SPRING,RING			
+---------+					
BV11-21-2A1	2				
+---------+					
| 21-2A2 |		SEAL,SIDE			
+---------+					
BV11-21-2A2	2				
+---------+					
| 21-2A3 |		SEAL,FLANGE			
+---------+					
BV11-21-2A3	1				
+---------+					
| 21-677 |		RING,'O'			
+---------+					
BV01-21-677	1				
+---------+					
| 56-176 |		HOLDER,JACK HANDLE			
+---------+					
FB01-56-176	1				

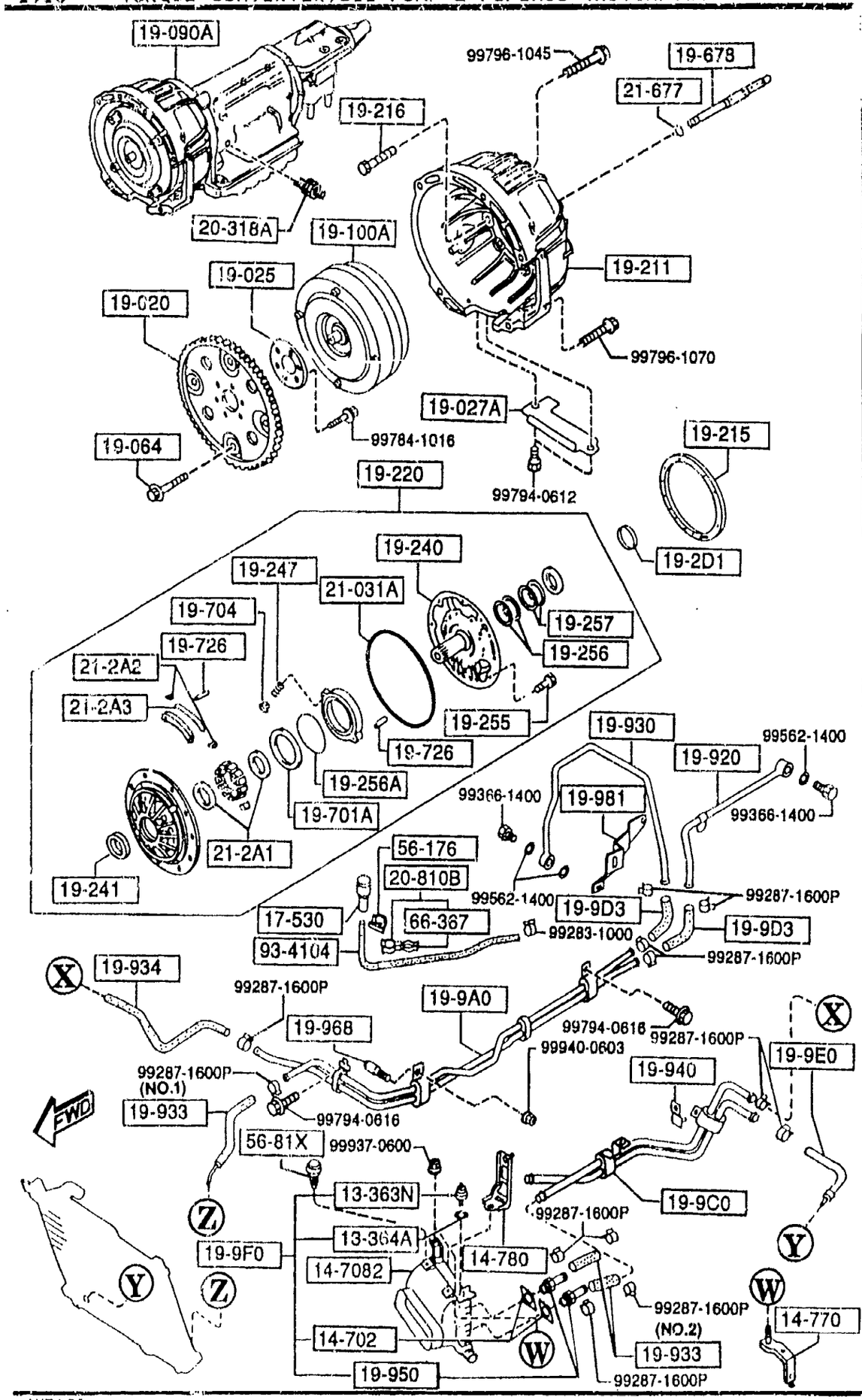

AUFA05

1910 -5 * TORQUE CONVERTER,OIL PUMP & PIPINGS (AUTOMATIC)

PART NO.	QTY	MODEL/RESTRICTION	MODEL/RESTRICTION	MODEL/RESTRICTION	FROM-TO
56-81X FB01-56-81X	3	FASTENER,DUCT PANEL			
66-367 GA98-66-367A	1	CLIP			
93-4104 99340-05540	1	HOSE			

CAT. AUFA05-03

1995-03

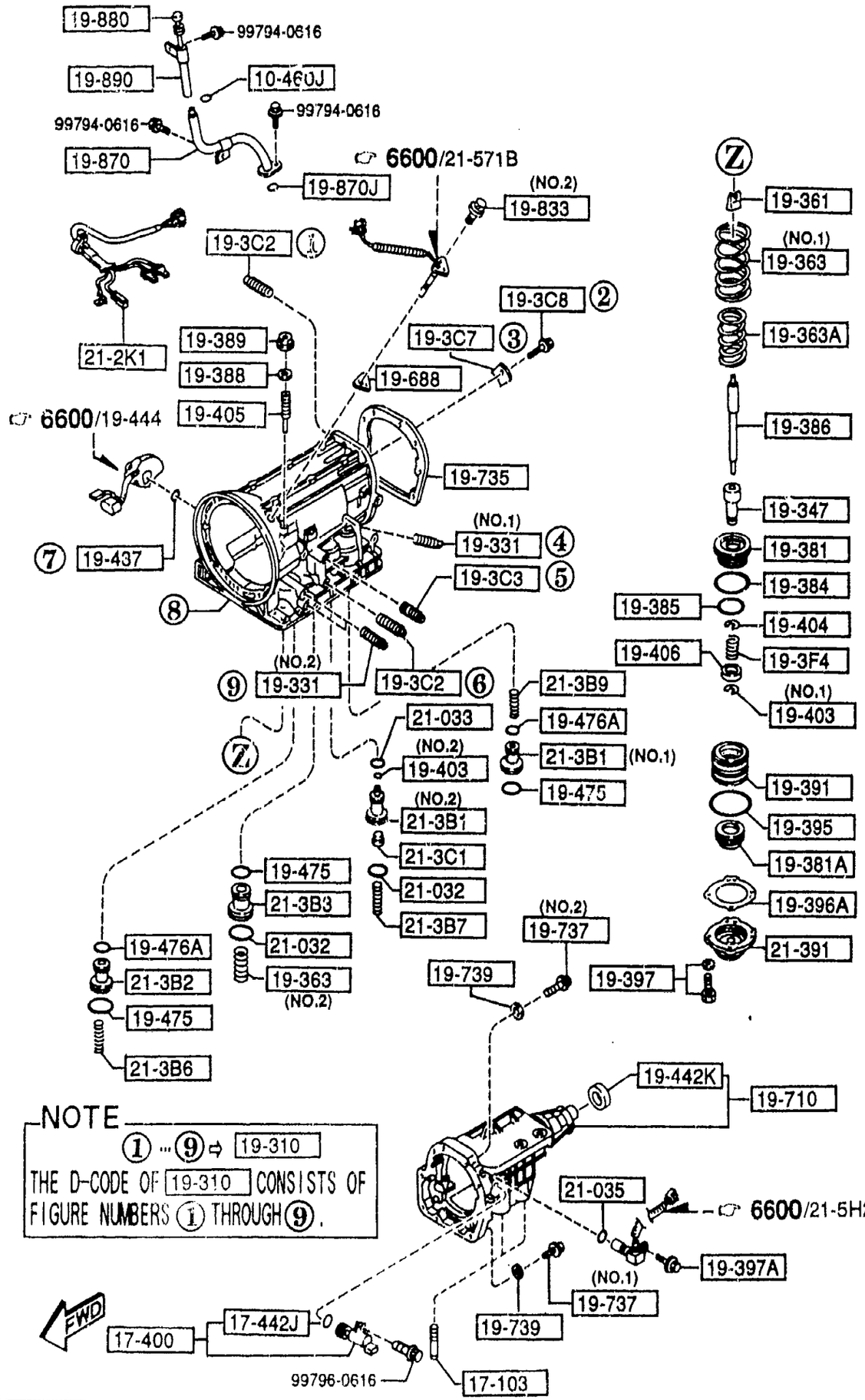

NOTE

① ··· ⑨ ⇨ 19-310

THE D-CODE OF 19-310 CONSISTS OF FIGURE NUMBERS ① THROUGH ⑨.

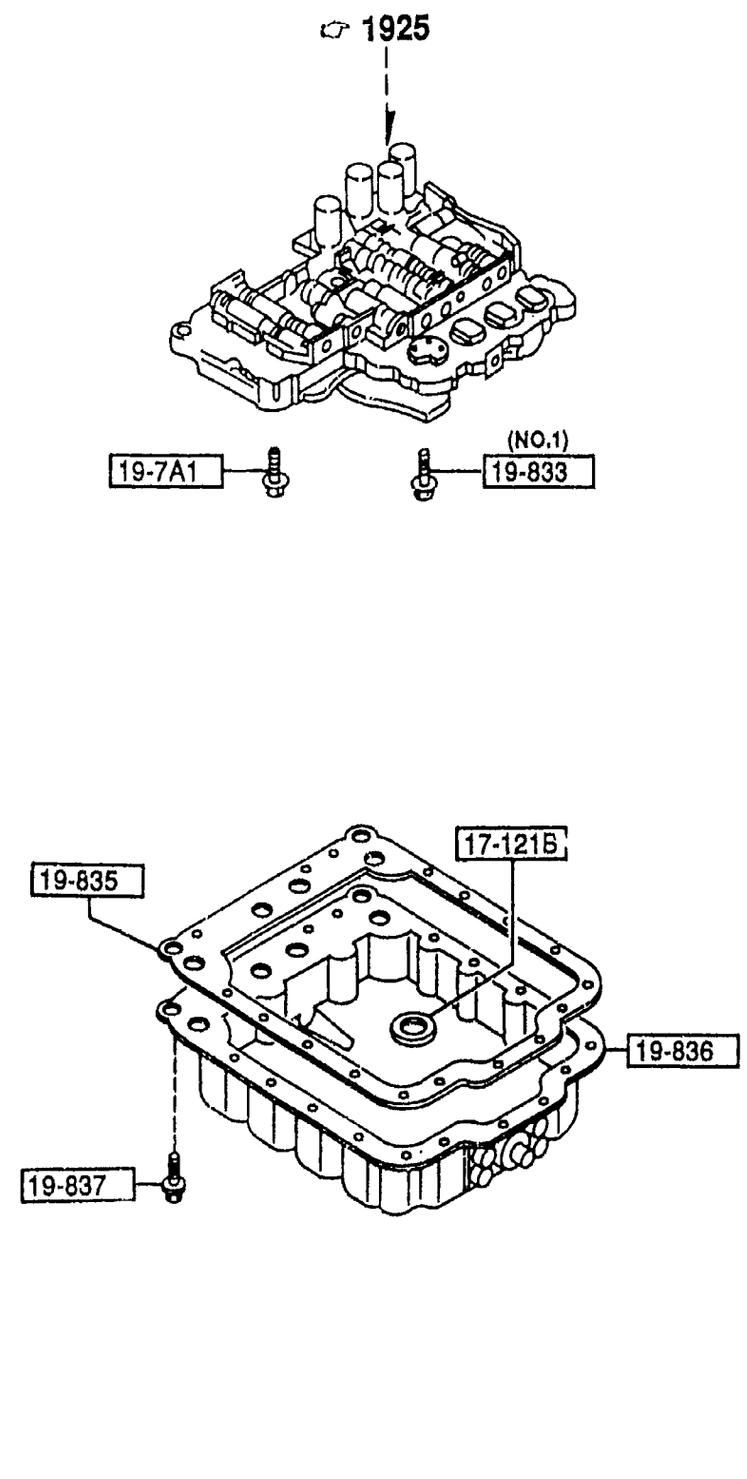

1920 TRANSMISSION CASE & MAIN CONTROL SYSTEM (AUTOMATIC)(1/2)

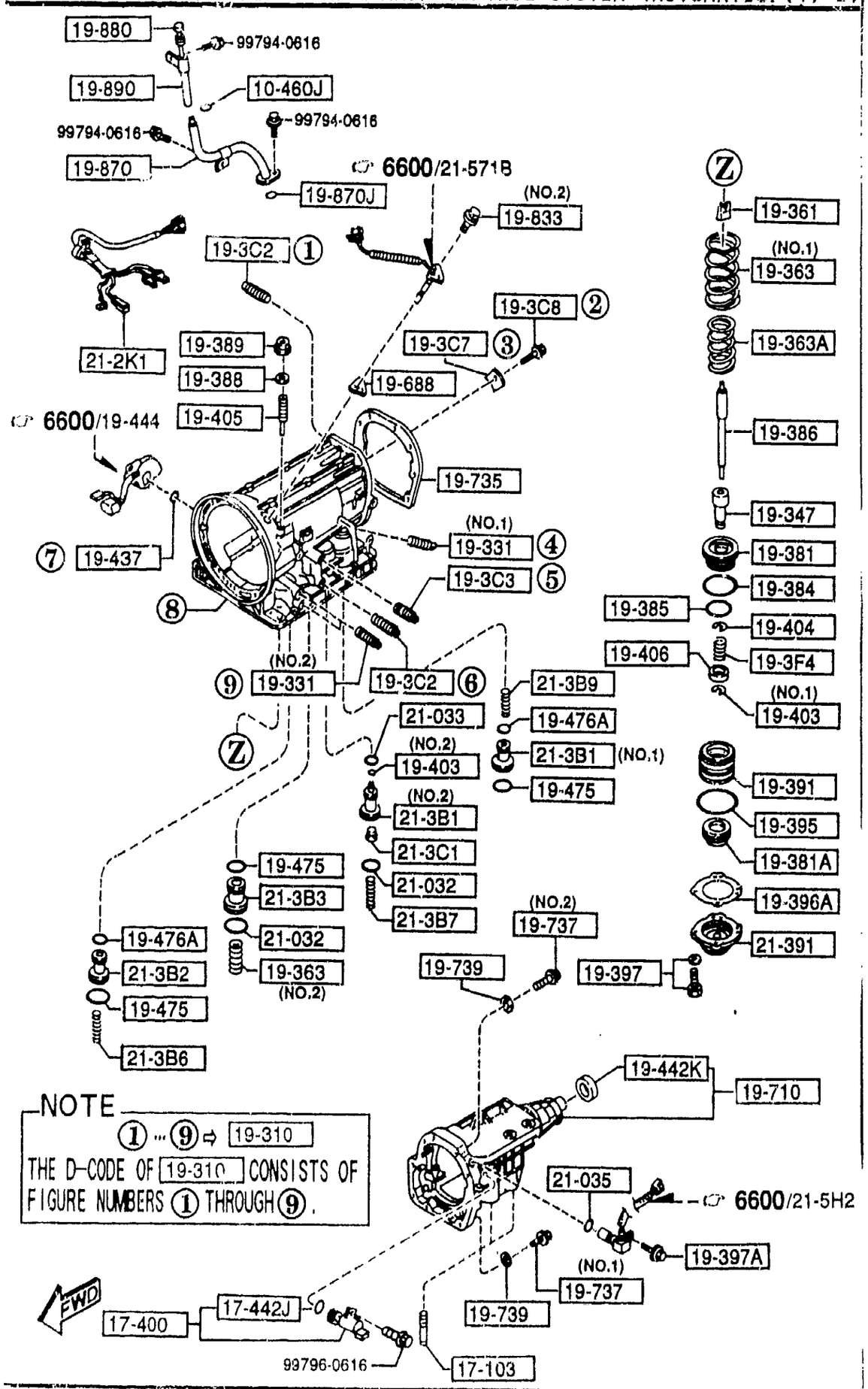

NOTE

① … ⑨ ⇨ 19-310

THE D-CODE OF 19-310 CONSISTS OF FIGURE NUMBERS ① THROUGH ⑨.

PART NO.	QTY	MODEL/RESTRICTION	MODEL/RESTRICTION	MODEL/RESTRICTION	FROM-TO
10-460J 99541-01201	1	RING,'O'			
17-103 R526-17-103	2	BOLT			
17-121B F401-17-121	1	MAGNET			
17-400 BV65-17-400	1	GEAR SET,DRIVEN-SPEED			
17-442J 1011-17-443	1	RING,'O'			
19-3C2 BV11-19-3C2	2	PLUG			
19-3C3 BV11-19-3C3	1	PLUG			
19-3C7 BV11-19-3C7	1	PLATE,BAFFLE			
19-3C8 BV11-19-3C8	1	BOLT,BAFFLE PLATE			
19-3F4 BV11-19-3F4	1	SPRING,PISTON RETURN			
19-310 BV56-19-310A	1	CASE,T/MISSION			
19-331 BV11-19-331	1	PLUG,SQUARE HEAD (ILLUST. NO.1)			
0338-19-331A	3	(ILLUST. NO.2)			
19-347 BV11-19-347	1	RETAINER,SERVO SPRING			

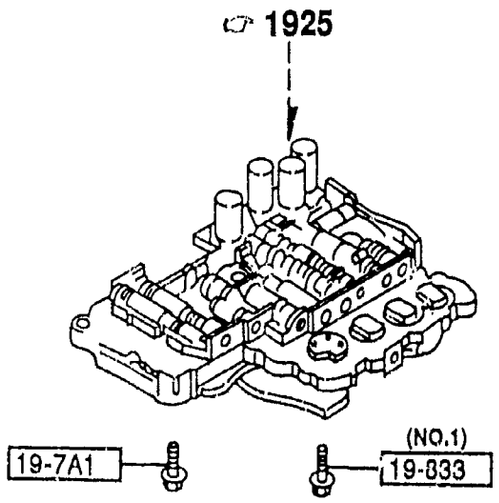

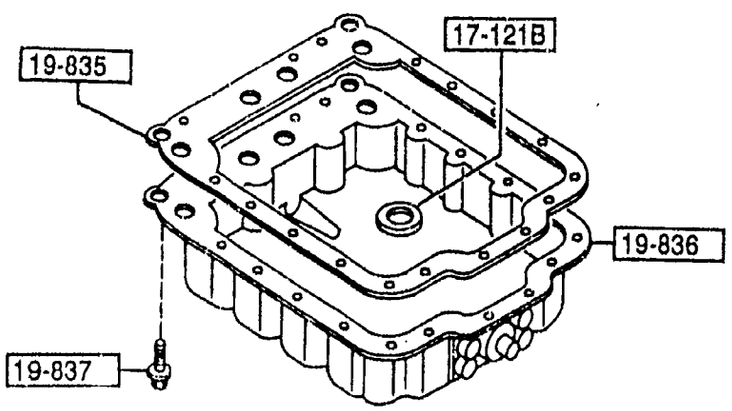

PART NO.	QTY	MODEL/RESTRICTION	MODEL/RESTRICTION	MODEL/RESTRICTION	FROM-TO
19-361		STRUT,BAND			
BV11-19-361	1				
19-363		SPRING,PISTON RETURN			
BV11-19-363	1	(ILLUST. NO.1)			
BV65-19-363	1	(ILLUST. NO.2)			
19-363A		SPRING,PISTON RETURN			
BV11-19-3F3	1				
19-381		PISTON,BAND SERVO			
BV11-19-381	1				
19-381A		PISTON,BAND SERVO			
BV65-21-321	1				
19-384		SEAL,PISTON			
BV11-19-384	1				
19-385		SEAL,PISTON			
BV11-19-385	1				
19-386		STEM,PISTON			
BV11-19-386	1				
19-388		WASHER,PLAIN			
BV11-19-388	1				
19-389		NUT			
BV11-19-389	1				
19-391		RETAINER,SERVO			
BV11-19-391	1				
19-395		RING,'O'			
0338-19-395	1				
19-396A		GASKET			
BV11-19-3J4	1				

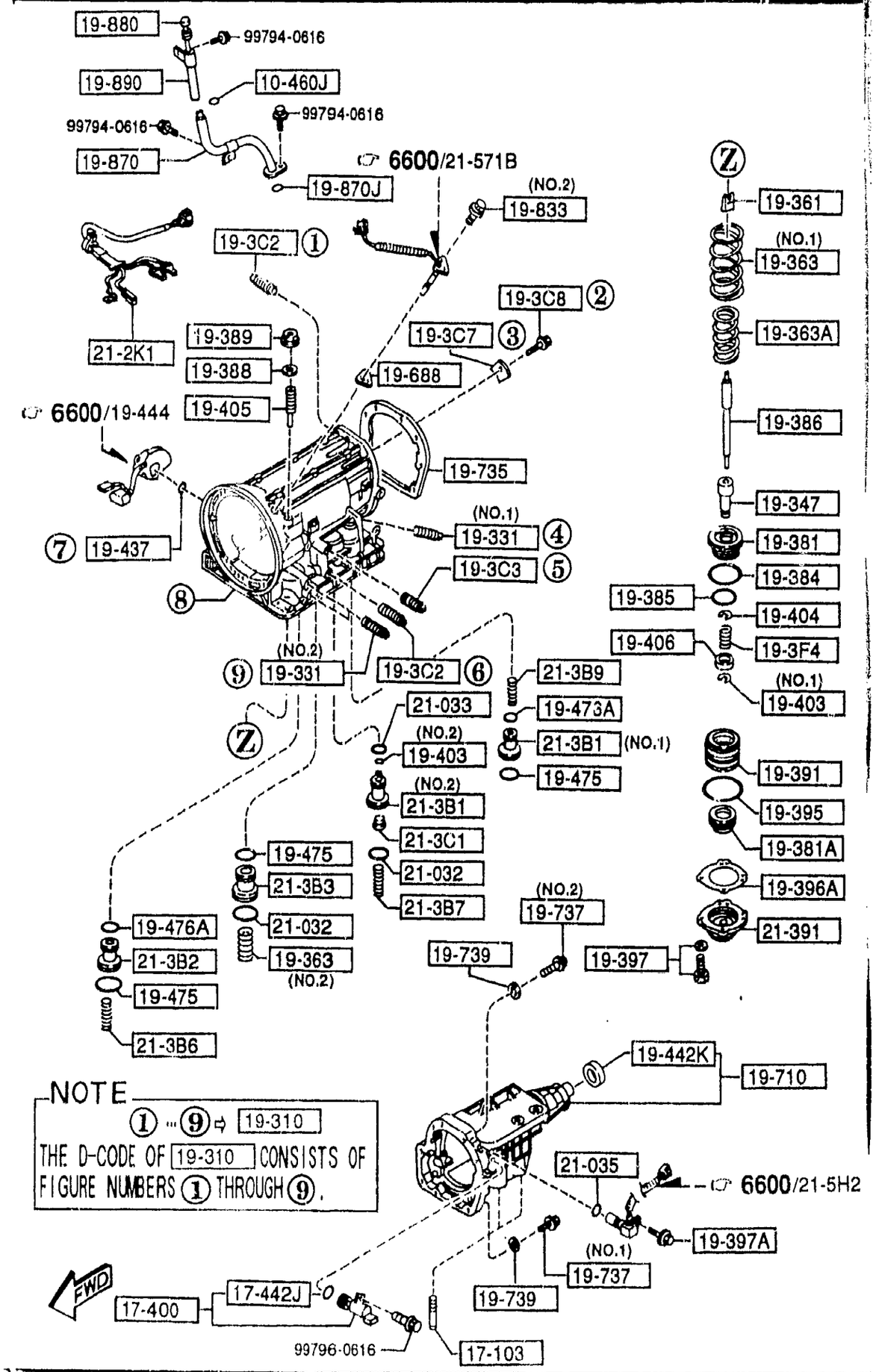

PART NO.	QTY	MODEL/RESTRICTION	MODEL/RESTRICTION	MODEL/RESTRICTION	FROM-TO
19-397		BOLT			
BV11-19-397	4				
19-397A		BOLT			
0338-19-397	1				
19-403		RING,SNAP-PISTON STEM LOW			
BV11-19-403	1	(ILLUST. NO.1)			
BV35-19-403	1	(ILLUST. NO.2)			
19-404		RING,SNAP-PISTON STEM UP			
BV11-19-404	1				
19-405		PIN			
BV11-19-405	1				
19-406		RETAINER,SPRING-PSTN STEM			
BV11-19-406	1				
19-437		SEAL,MANUAL SHAFT LEVER			
BV11-19-437	1				
19-442K		SEAL,OIL			
BV65-19-437	1				
19-475		SEAL,'O'RING			
BV11-19-475	3				
19-476A		RING,'O'			
BV11-19-476	2				
19-688		GASKET,GOVERNOR			
BV56-19-688	1				
19-7A1		BOLT			
BV11-19-7A3	7				
19-710		HOUSING,EXTENSION			
BV65-19-710	1				

1920 TRANSMISSION CASE & MAIN CONTROL SYSTEM (AUTOMATIC) (2/2)

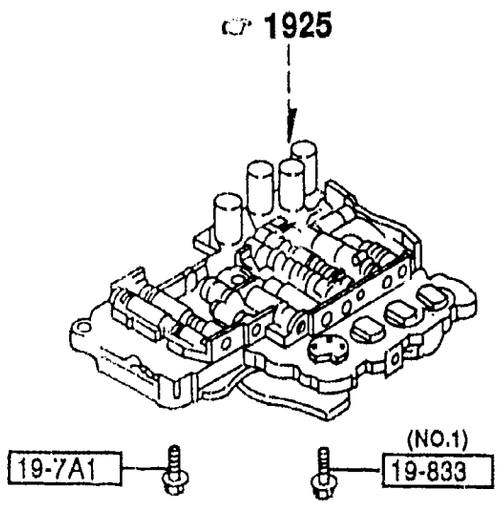

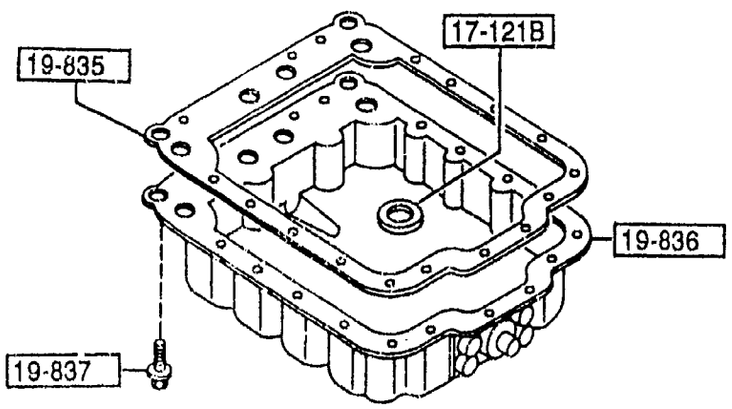

PART NO.	QTY	MODEL/RESTRICTION	MODEL/RESTRICTION	MODEL/RESTRICTION	FROM-TO
19-735		GASKET,EXTENSION			
BV60-19-735	1				
19-737		BOLT			
BV12-19-737	3	(ILLUST. NO.1)			
BV40-19-737	5	(ILLUST. NO.2)			
19-739		WASHER,PLAIN			
0338-19-739	10				
19-833		BOLT,CONTROL VALVE			
BV11-19-833	13	(ILLUST. NO.1)			
BV56-19-833	2	(ILLUST. NO.2)			
19-835		GASKET,OIL PAN			
BV60-19-835	1				
19-836		PAN,OIL			
BV65-19-836	1				
19-837		BOLT,OIL PAN			
0338-19-837	18				
19-870		TUBE,OIL LEVEL			
BV65-19-870	1				
19-870J		RING,'O'			
99541-01601	1				
19-880		GAUGE,OIL LEVEL			
BV45-19-880	1				
19-890		TUBE,OIL FILTER-UPPE R			
BV65-19-890	1				
21-032		RING,'O'-UP.ACCUM 2N D PIS			
BV11-21-032	2				
21-033		RING,'O'-ACCUM. CLUT CH			
BV11-21-033	1				

1920 TRANSMISSION CASE & MAIN CONTROL SYSTEM (AUTOMATIC) (1/2)

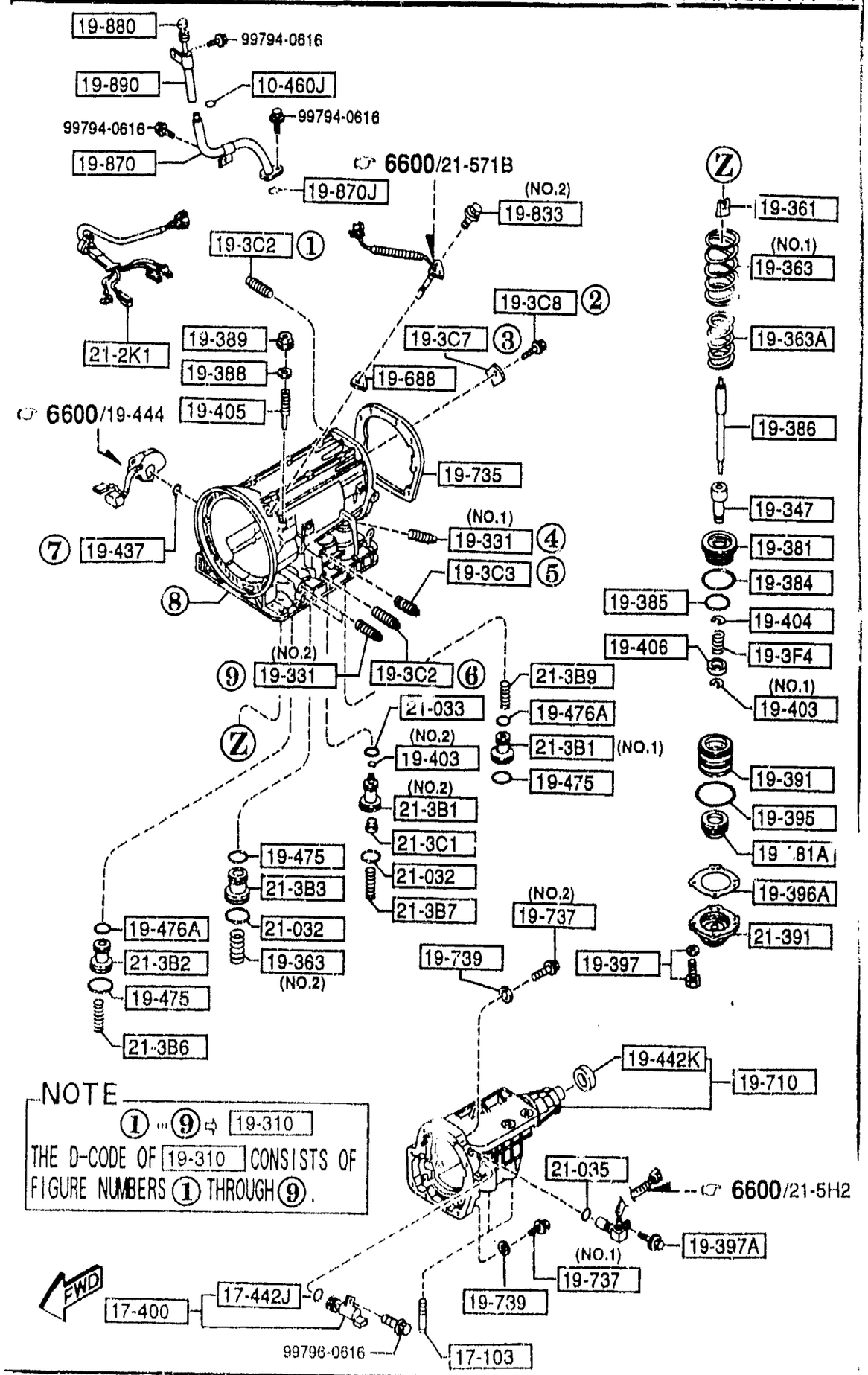

PART NO.	QTY	MODEL/RESTRICTION	MODEL/RESTRICTION	MODEL/RESTRICTION	FROM-TO
21-035		RING,'O'-ACCUM. FOR. CLUTCH			
BV11-21-035	1				
21-2K1		TERMINAL			
BV65-21-2K1	1				
21-3B1		PISTON,ACCUMULATOR			
BV11-21-3B1	1	(ILLUST. NO.1)			
BV65-21-3B1	1	(ILLUST. NO.2)			
21-3B2		PISTON,ACCUMULATOR			
BV11-21-3B2	1				
21-3B3		PISTON,ACCUMULATOR			
BV11-21-3B3	1				
21-3B6		SPRING,ACCUMULATOR			
BV11-21-3B6	1				
21-3B7		SPRING,ACCUMULATOR			
BV45-21-3B7	1				
21-3B9		SPRING,PISTON RETURN			
BV11-21-3B9	1				
21-3C1		RET,ACCUM			
BV40-21-3C1	1				
21-391		RETAINER,SERVO			
BV65-21-391	1				

NOTE
①~②⇨ 19-750
THE D-CODE OF 19-750 CONSISTS OF FIGURE NUMBERS ① THROUGH ②.

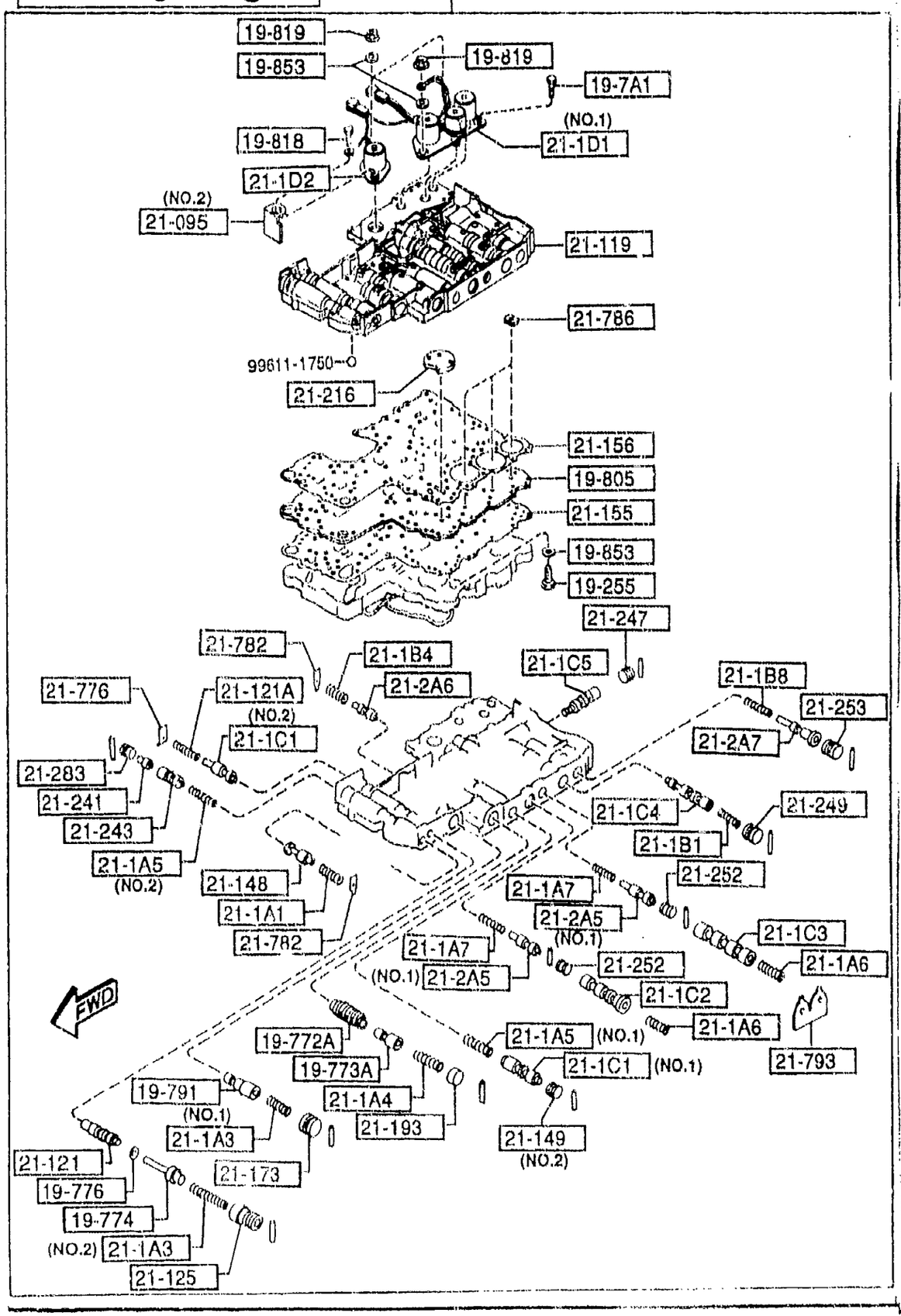

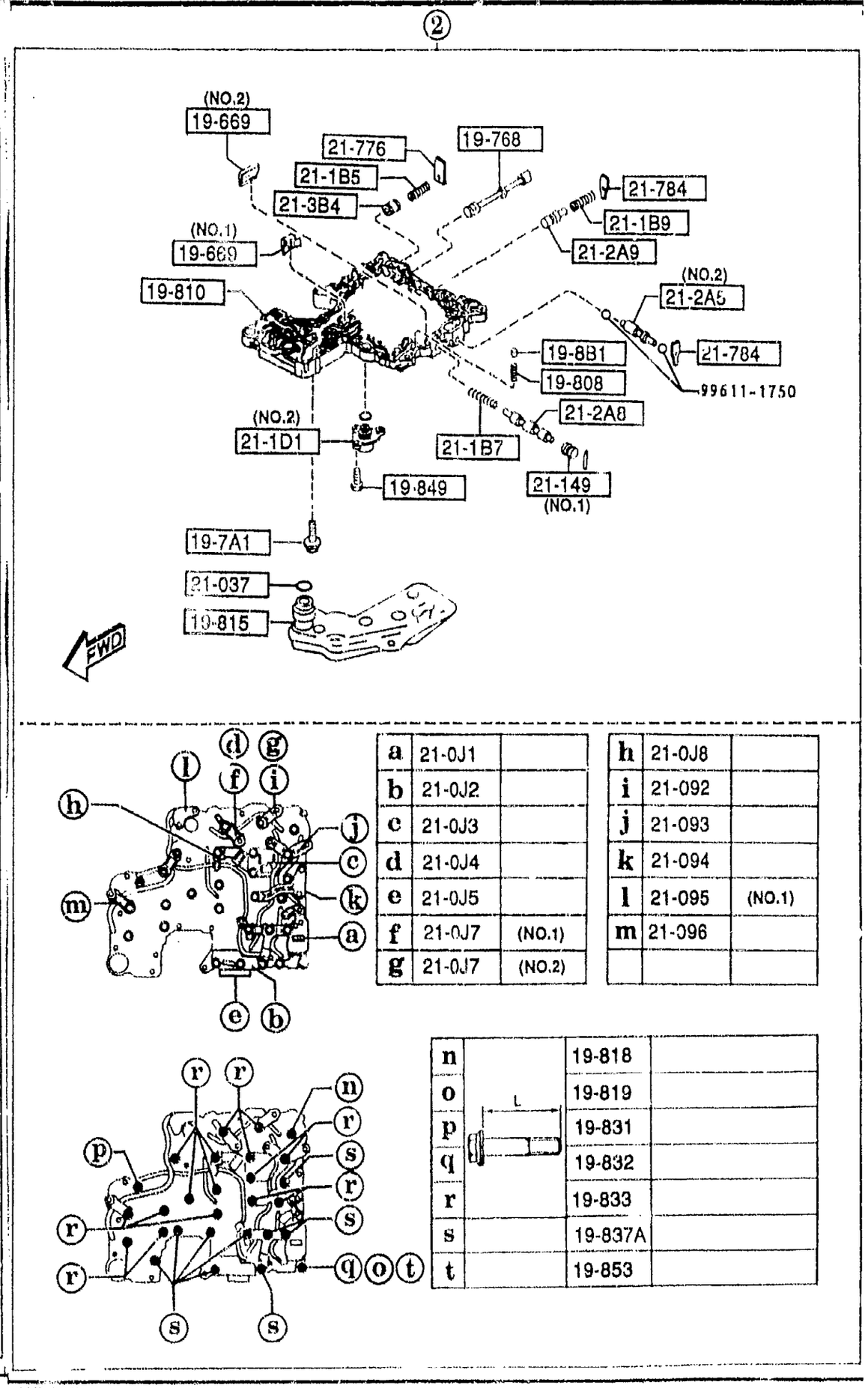

a	21-0J1	
b	21-0J2	
c	21-0J3	
d	21-0J4	
e	21-0J5	
f	21-0J7	(NO.1)
g	21-0J7	(NO.2)

h	21-0J8	
i	21-092	
j	21-093	
k	21-094	
l	21-095	(NO.1)
m	21-096	

n	19-818	
o	19-819	
p	19-831	
q	19-832	
r	19-833	
s	19-837A	
t	19-853	

1-N 9

1925 CONTROL VALVE (AUTOMATIC) (1/2)

NOTE
①~②⇨ 19-750
THE D-CODE OF 19-750 CONSISTS OF FIGURE NUMBERS ① THROUGH ②.

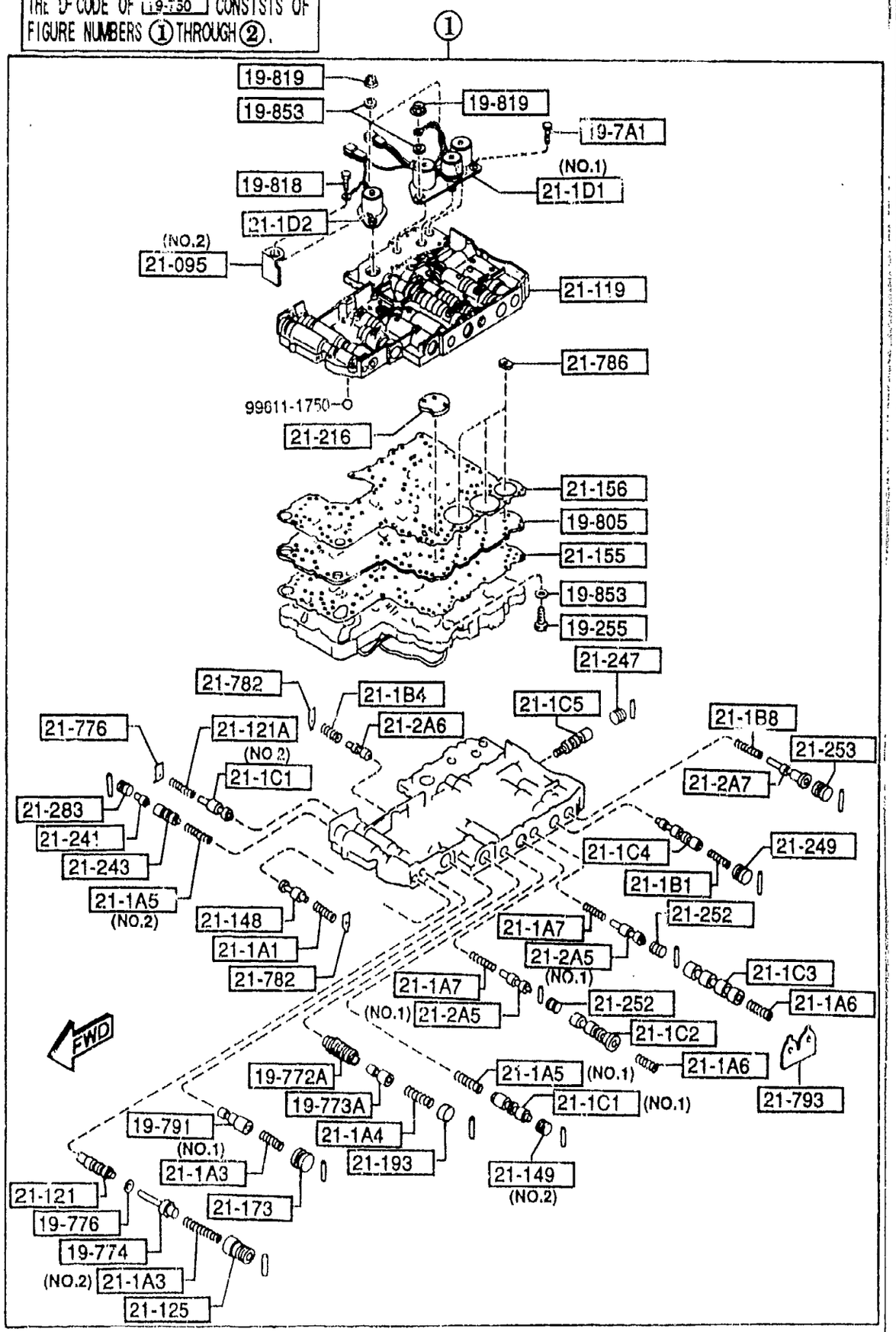

PART NO.	QTY	MODEL/RESTRICTION	MODEL/RESTRICTION	MODEL/RESTRICTION	FROM-TO
19-255		BOLT			
BV50-19-255	1				
19-669		FILTER,GOVERNOR			
BV11-19-669	1	(ILLUST. NO.1)			
BV50-19-669	1	(ILLUST. NO.2)			
19-7A1		BOLT			
BV11-19-7A1	2				
19-750		VALVE,CONTROL			
BV65-19-750A	1				
19-768		VALVE,MANUAL			
BV11-19-768	1				
19-772A		SLEEVE,ACCUMLATOR			
BV11-19-772	1				
19-773A		VALVE,ACCUMULATOR			
BV11-19-773	1				
19-774		PLUG,REGULATOR			
BV45-19-774	1				
19-776		SHEET,SPRING			
BV11-19-776	1				
19-791		VALVE,MODIFIER			
BV11-19-791	1				
19-8B1		VALVE,ORIFICE CHECK			
BV30-19-8B1	1				
19-805		PLATE,SEPARATOR			
BV56-19-805	1				
19-808		SPRING			
0338-19-808	1				

②

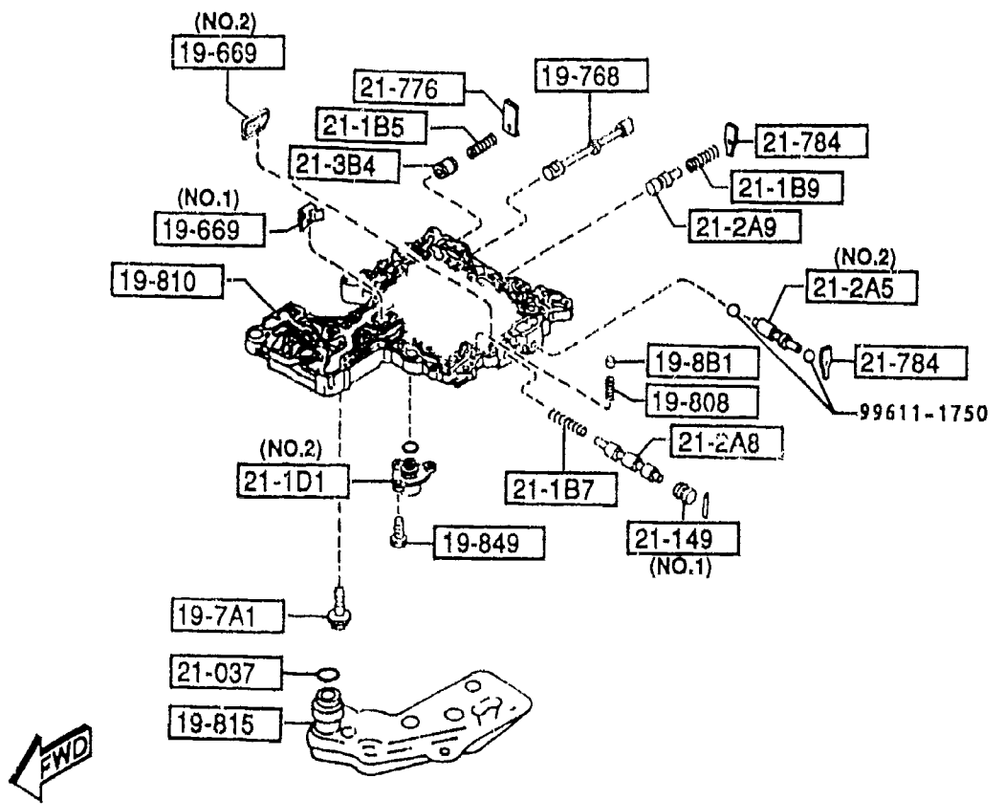

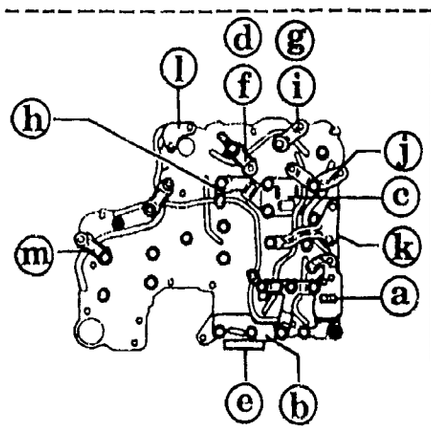

a	21-0J1		h	21-0J8	
b	21-0J2		i	21-092	
c	21-0J3		j	21-093	
d	21-0J4		k	21-094	
e	21-0J5		l	21-095	(NO.1)
f	21-0J7	(NO.1)	m	21-096	
g	21-0J7	(NO.2)			

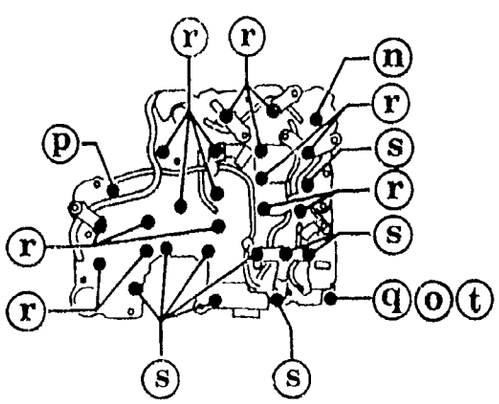

n		19-818	
o		19-819	
p		19-831	
q		19-832	
r		19-833	
s		19-837A	
t		19-853	

PART NO.	QTY	MODEL/RESTRICTION	MODEL/RESTRICTION	MODEL/RESTRICTION	FROM-TO
19-810 BV40-19-810	1	BODY,LWR-CONT.VALVE			
19-815 BV65-19-815	1	STRAINER,OIL			
19-818 BV11-19-818	2	BOLT			
19-819 BV11-19-819	4	NUT			
19-831 BV11-19-831	1	BOLT,CONTROL VALVE			
19-832 BV50-19-832	1	BOLT,CONTROL VALVE			
19-833 BV11-19-833	16	BOLT,CONTROL VALVE			
19-837A BV11-19-837	9	BOLT,CONTROL VALVE			
19-849 BV11-19-849	2	BOLT			
19-853 BV11-19-853	6	WASHER			
21-0J1 BV50-21-0J1	1	CLIP,HARNESS			
21-0J2 BV45-19-0J2	1	CLIP,HARNESS			
21-0J3 BV11-21-J03	1	CLIP,HARNESS			
21-0J4 BV11-21-J04	1	CLIP,HARNESS			

NOTE

①…② ⇨ 19-750

THE D-CODE OF 19-750 CONSISTS OF FIGURE NUMBERS ① THROUGH ②.

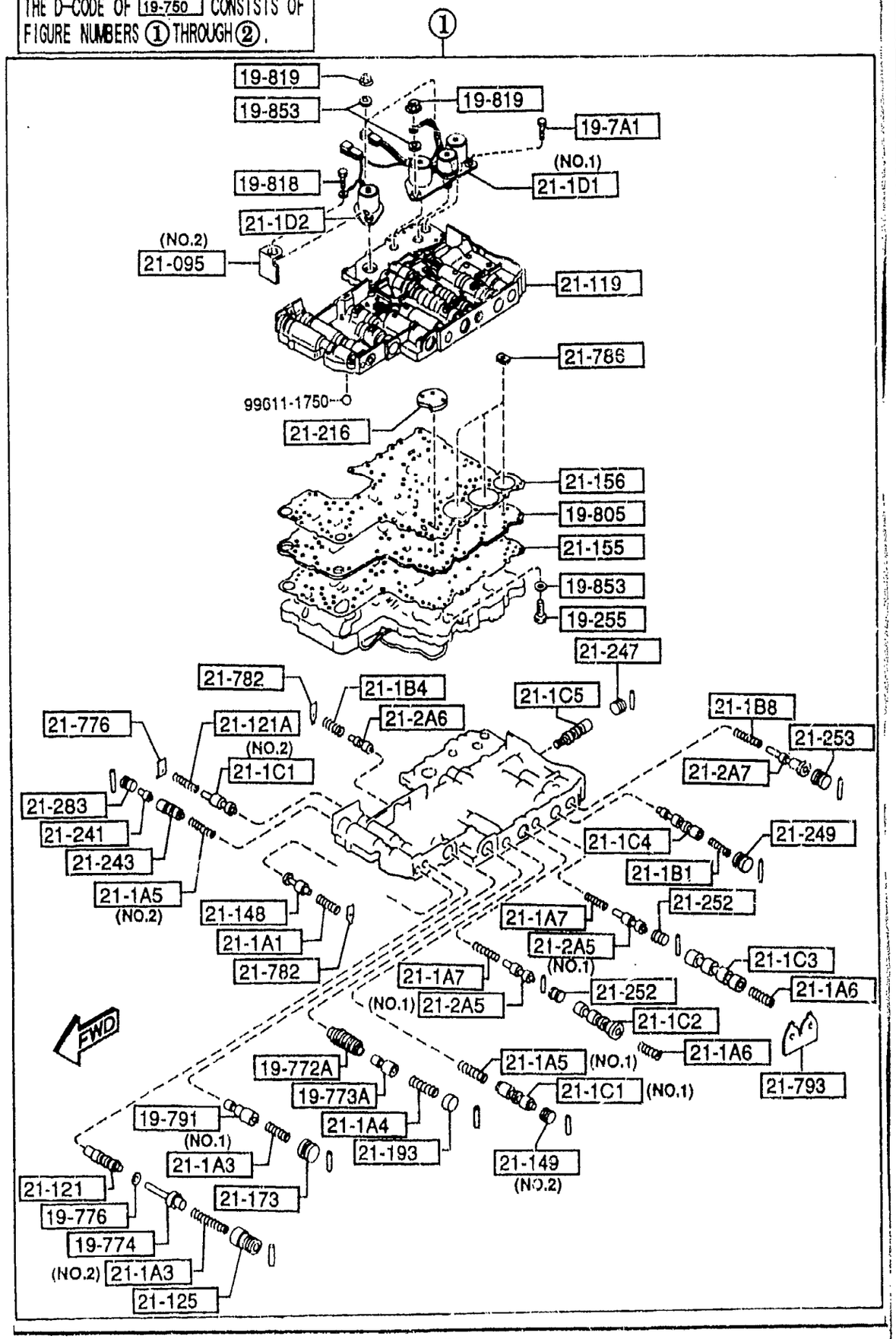

PART NO.	QTY	MODEL/RESTRICTION	MODEL/RESTRICTION	MODEL/RESTRICTION	FROM-TO
21-0J5		CLIP,HARNESS			
BV11-21-0J5	1				
21-0J7		BRACKET,TUBE			
BV11-21-0J7A	1	(ILLUST. NO.1)			
BV56-21-0J7	1	(ILLUST. NO.2)			
21-0J8		BRACKET,TUBE			
BV11-21-0J8	1				
21-037		RING,'O'			
BV11-21-037	1				
21-092		BRACKET,TUBE			
BV11-21-092	1				
21-093		BRACKET,TUBE			
BV11-21-093	1				
21-094		BRACKET,TUBE			
BV35-21-094	1				
21-095		BRACKET			
BV11-21-095	1	(ILLUST. NO.1)			
BV56-21-095	1	(ILLUST. NO.2)			
21-096		BRACKET,TUBE			
BV11-21-096	1				
21-1A1		SPRING,VALVE			
BV65-21-1A1	1				
21-1A3		SPRING,VALVE			
BV11-21-1A3	1	(ILLUST. NO.1)			
BV40-21-1A3	1	(ILLUST. NO.2)			
21-1A4		SPRING,VALVE			
BV11-21-1A4	1				
21-1A5		SPRING,VALVE			

②

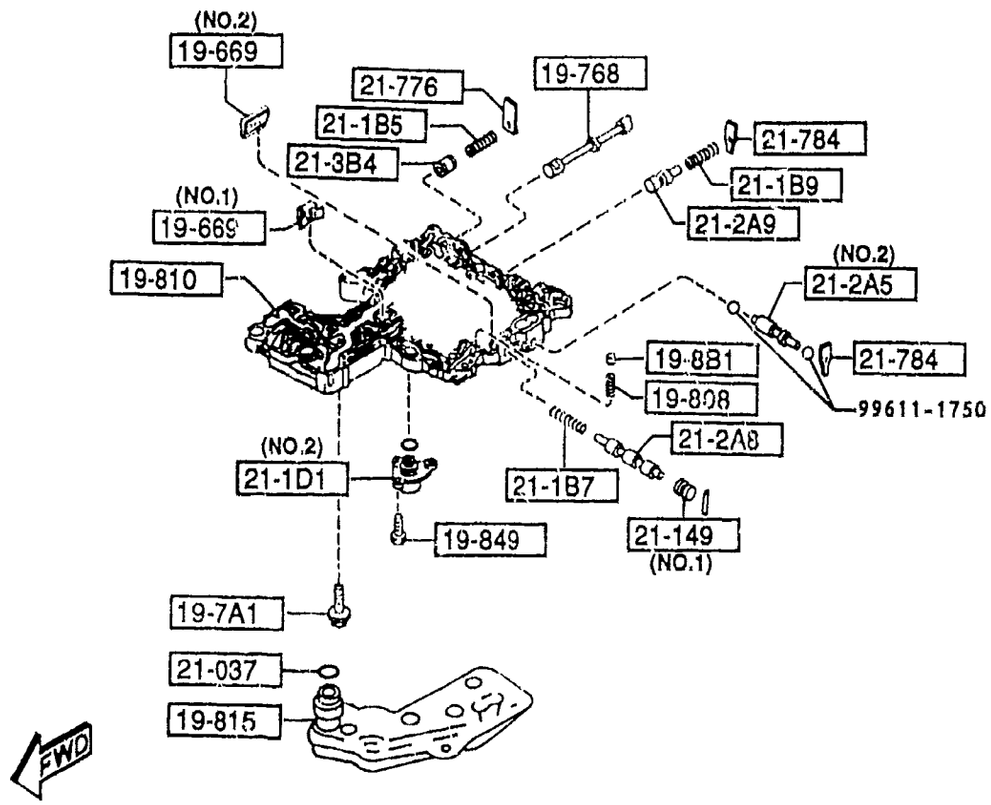

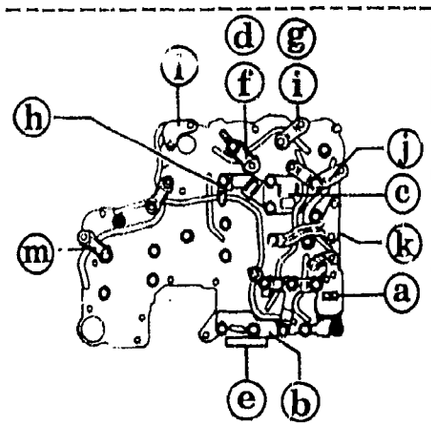

a	21-0J1	
b	21-0J2	
c	21-0J3	
d	21-0J4	
e	21-0J5	
f	21-0J7	(NO.1)
g	21-0J7	(NO.2)

h	21-0J8	
i	21-092	
j	21-093	
k	21-094	
l	21-095	(NO.1)
m	21-096	

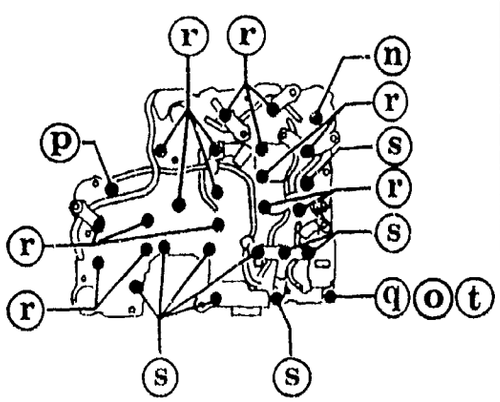

n	L	19-818	
o		19-819	
p		19-831	
q		19-832	
r		19-833	
s		19-837A	
t		19-853	

PART NO.	QTY	MODEL/RESTRICTION	MODEL/RESTRICTION	MODEL/RESTRICTION	FROM-TO
CONT'D					
BV11-21-1A5	1	(ILLUST. NO.1)			
BV56-21-1A5	1	(ILLUST. NO.2)			
+---------+					
| 21-1A6 |		SPRING,VALVE			
+---------+					
BV11-21-1A6	2				
+---------+					
| 21-1A7 |		SPRING,VALVE			
+---------+					
BV11-21-1A7	2				
+---------+					
| 21-1B1 |		SPRING,VALVE			
+---------+					
BV11-21-1B1	1				
+---------+					
| 21-1B4 |		SPRING,VALVE			
+---------+					
BV11-21-1B4	1				
+---------+					
| 21-1B5 |		SPRING,VALVE			
+---------+					
BV12-21-1B5	1				
+---------+					
| 21-1B7 |		SPRING,VALVE			
+---------+					
BV11-21-1B7	1				
+---------+					
| 21-1B8 |		SPRING,VALVE			
+---------+					
BV45-21-1B8	1				
+---------+					
| 21-1B9 |		SPRING,VALVE			
+---------+					
BV11-21-1B9	1				
+---------+					
| 21-1C1 |		VALVE,SHIFT			
+---------+					
BV11-21-1C1	1	(ILLUST. NO.1)			
BV40-21-1C1	1	(ILLUST. NO.2)			
+---------+					
| 21-1C2 |		VALVE,SHIFT			
+---------+					
BV11-21-1C2	1				
+---------+					
| 21-1C3 |		VALVE,SHIFT			
+---------+					
BV11-21-1C3	1				
+---------+					
| 21-1C4 |		VALVE,SHIFT			
+---------+					
BV11-21-1C4	1				

1925 CONTROL VALVE (AUTOMATIC) (1/2)

NOTE

①~② ⇨ 19-750

THE D-CODE OF 19-750 CONSISTS OF FIGURE NUMBERS ① THROUGH ②.

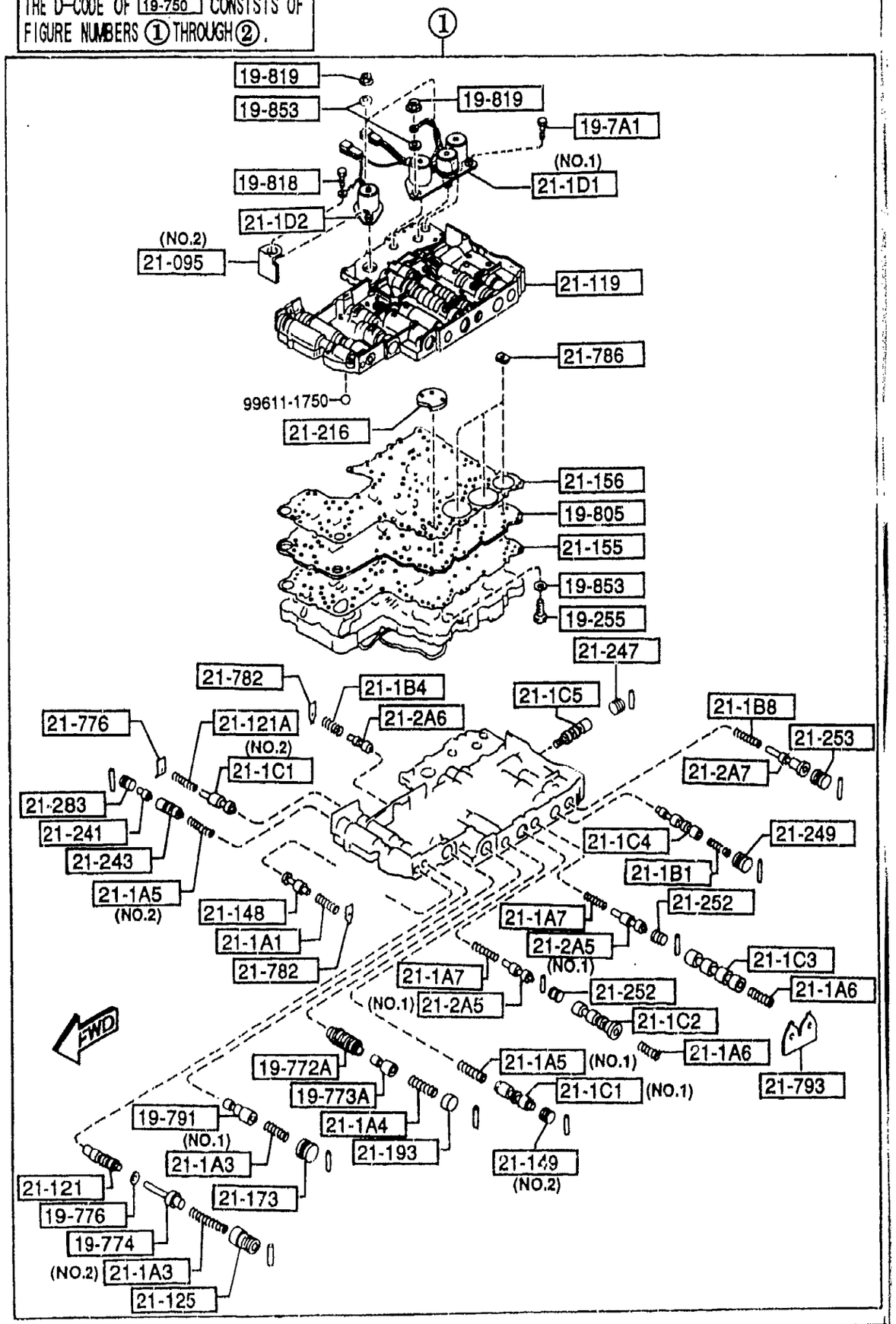

PART NO.	QTY	MODEL/RESTRICTION	MODEL/RESTRICTION	MODEL/RESTRICTION	FROM-TO
21-1C5		VALVE,SHIFT			
BV45-21-1C5	1				
21-1D1		SOLENOID			
BV11-21-1D1	1	(ILLUST. NO.1)			
BV45-21-1D1	1	(ILLUST. NO.2)			
21-1D2		SOLENOID			
BV11-21-1D2	1				
21-119		BODY,UPPER-CONTROL			
BV40-21-119	1				
21-121		VALVE			
BV11-21-121	1				
21-121A		SPRING,VALVE			
BV45-21-121	1				
21-125		SLEEVE,PLUG REGULATOR			
BV11-21-125	1				
21-148		VALVE,CONVR RELIEF			
BV11-21-148	1				
21-149		PLUG,STOPPER			
BV11-21-149	1	(ILLUST. NO.1)			
BV30-21-149	1	(ILLUST. NO.2)			
21-155		GASKET,BODY-LWR			
BV40-21-155	1				
21-156		GASKET,BODY-UPP			
BV40-21-156	1				
21-173		PLUG,STOPPER			
BV11-21-173	1				
21-193		PLUG,STOPPER			
BV11-21-193	1				

②

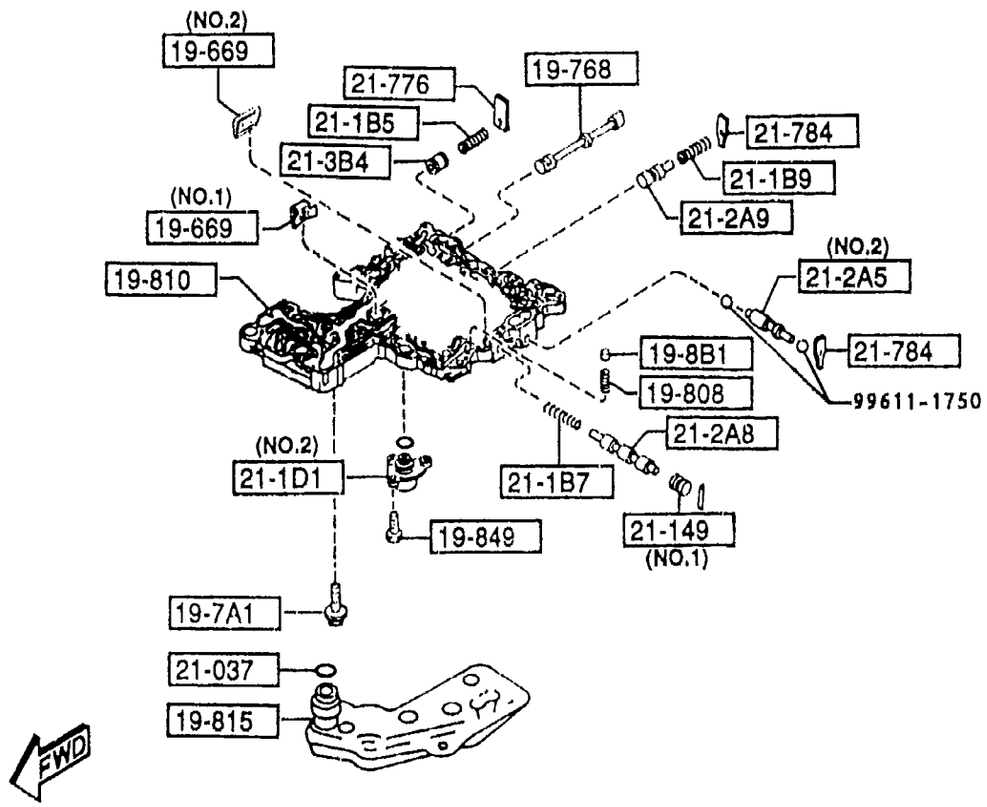

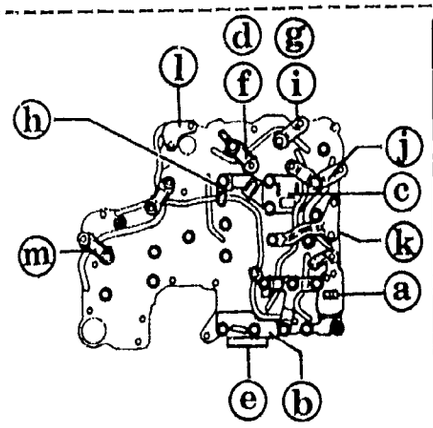

a	21-0J1	
b	21-0J2	
c	21-0J3	
d	21-0J4	
e	21-0J5	
f	21-0J7	(NO.1)
g	21-0J7	(NO.2)

h	21-0J8	
i	21-092	
j	21-093	
k	21-094	
l	21-095	(NO.1)
m	21-096	

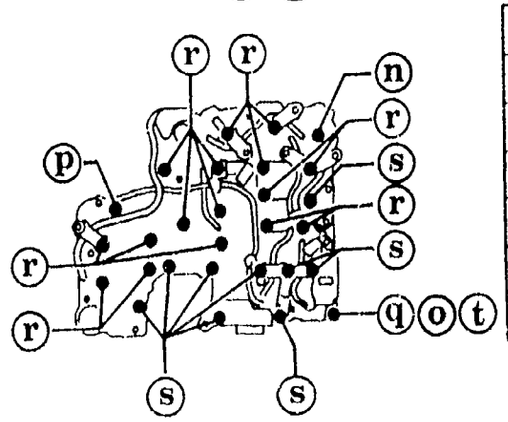

n		19-818	
o		19-819	
p		19-831	
q		19-832	
r		19-833	
s		19-837A	
t		19-853	

PART NO.	QTY	MODEL/RESTRICTION	MODEL/RESTRICTION	MODEL/RESTRICTION	FROM-TO
21-2A5		VALVE,SPOOL			
BV11-21-2A5	2	(ILLUST. NO.1)			
BV12-21-2A5	1	(ILLUST. NO.2)			
21-2A6		VALVE,SPOOL			
BV11-21-2A6	1				
21-2A7		VALVE,SPOOL			
BV11-21-2A7	1				
21-2A8		VALVE,SPOOL			
BV11-21-2A8	1				
21-2A9		VALVE,SPOOL			
BV35-21-2A9	1				
21-216		PLATE'E',SIDE			
BV11-21-216	1				
21-241		SLEEVE,LOCK UP			
BV40-21-241	1				
21-243		VALVE,3RD LOCK UP			
BV40-21-243	1				
21-247		PLUG,STOPPER			
BV30-21-247	1				
21-249		PLUG			
BV56-21-249	1				
21-252		PLUG,STOPPER			
BV11-21-252	2				
21-253		GASKET,DRUM SUPPORT			
BV11-21-253	1				
21-283		VALVE,LOCK UP CONTROL			
BV40-21-283	1				

NOTE
①…②⇨ 19-750
THE D-CODE OF 19-750 CONSISTS OF FIGURE NUMBERS ① THROUGH ②.

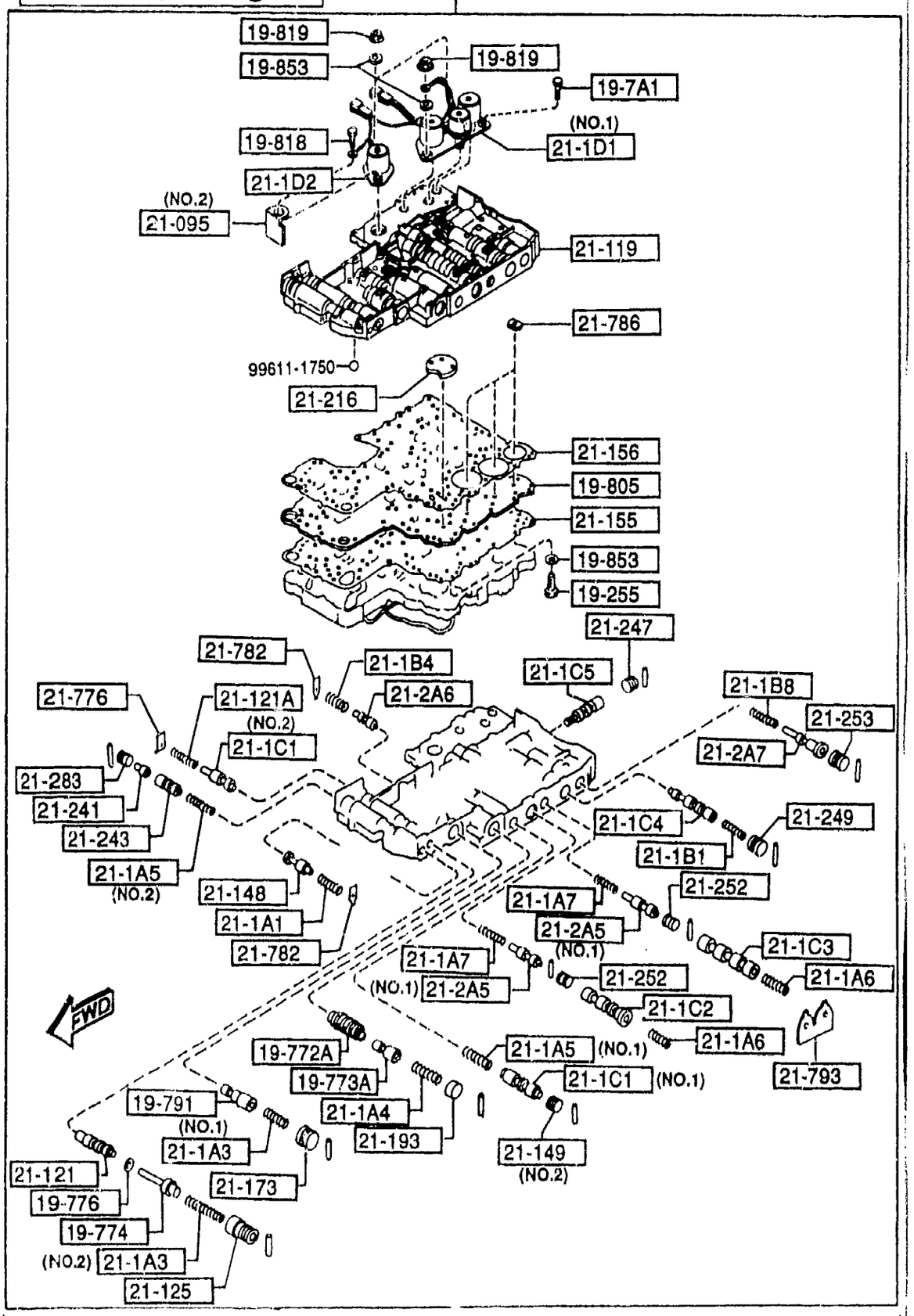

PART NO.	QTY	MODEL/RESTRICTION	MODEL/RESTRICTION	MODEL/RESTRICTION	FROM-TO
21-3B4 BV11-21-3B4	1	PISTON,ACCUMULATOR			
21-776 BV40-21-776	2	PLATE,RETAINING			
21-782 BV11-21-782	2	PLATE			
21-784 BV11-21-784	2	PLATE			
21-786 BV11-21-786	3	PLATE			
21-793 BV35-21-793	1	PLATE			

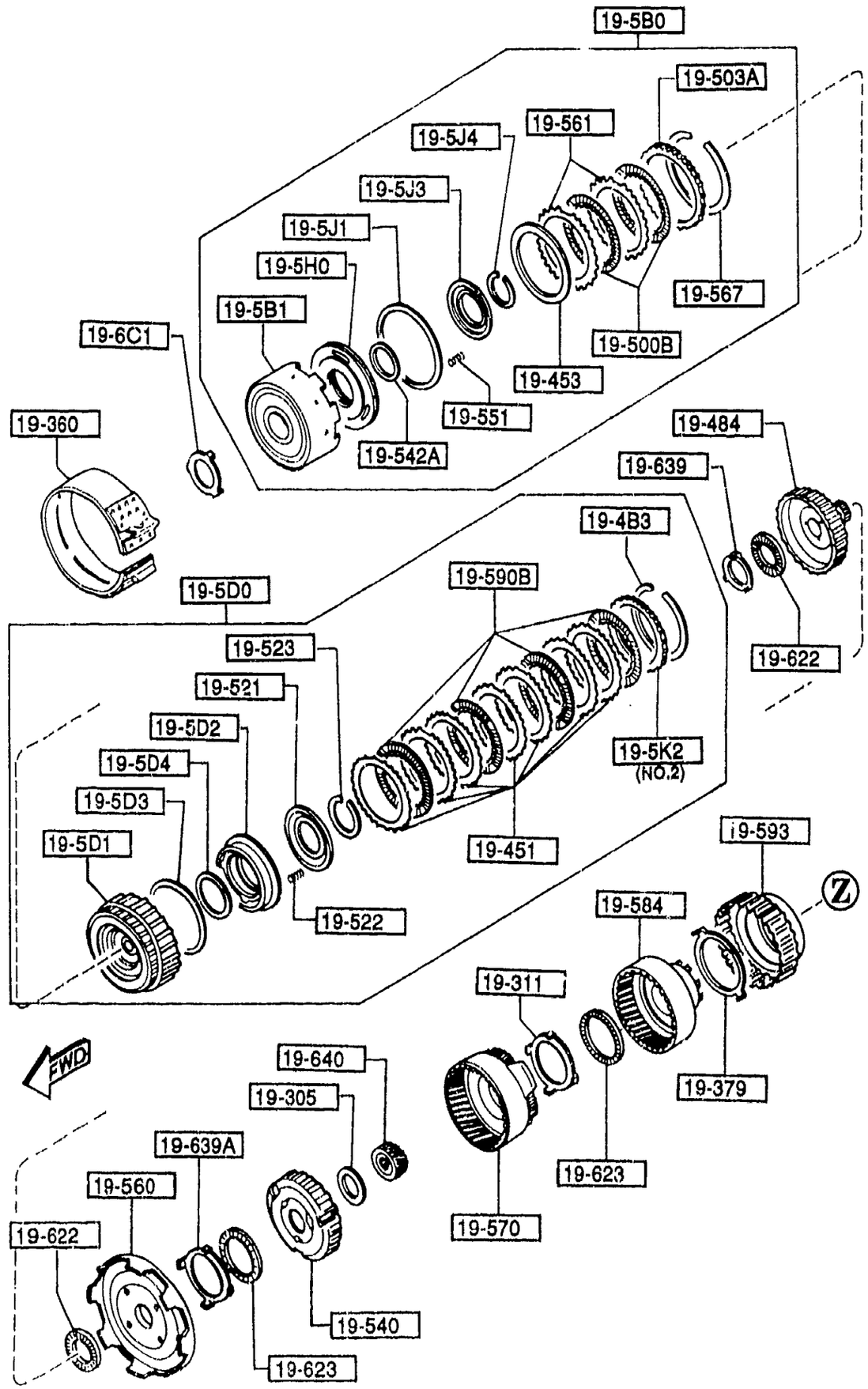
19-5B0
19-503A
19-561
19-5J4
19-5J3
19-5J1
19-5H0
19-5B1
19-6C1
19-567
19-500B
19-453
19-551
19-542A
19-360
19-484
19-639
19-4B3
19-590B
19-5D0
19-523
19-521
19-5D2
19-5D4
19-5D3
19-5D1
19-5K2
(NO.2)
19-451
19-522
19-622
19-593
19-584
19-311
19-379
19-623
19-570
19-640
19-305
19-639A
19-560
19-622
19-540
19-623
FWD

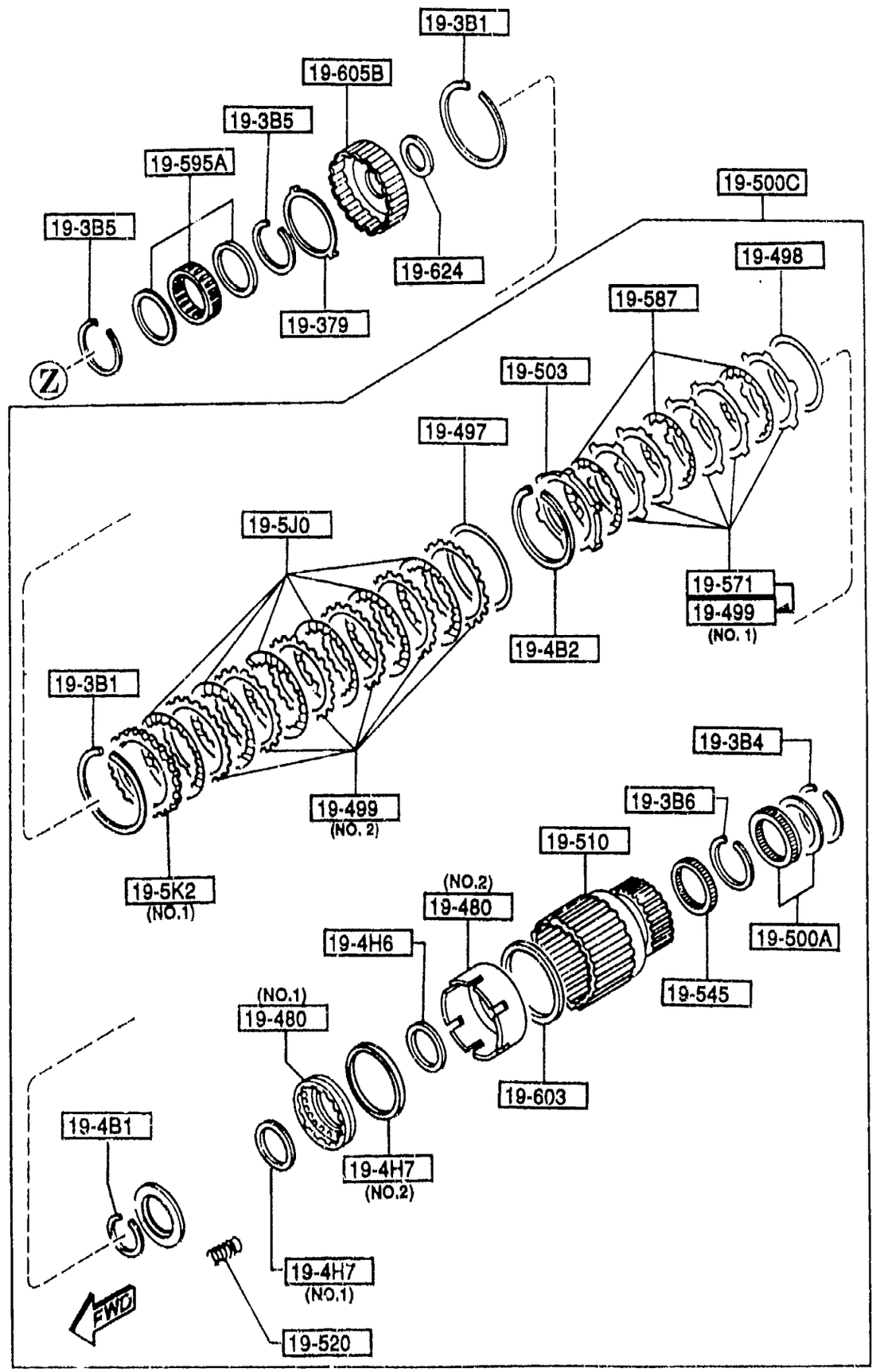
19-3B1
19-605B
19-3B5
19-595A
19-3B5
19-624
19-379
19-500C
19-498
19-587
19-503
19-497
19-5J0
19-571
19-499
(NO. 1)
19-4B2
19-3B1
19-499
(NO. 2)
19-5K2
(NO.1)
19-3B4
19-3B6
19-510
(NO.2)
19-480
19-500A
19-4H6
19-545
(NO.1)
19-480
19-603
19-4B1
19-4H7
(NO.2)
19-4H7
(NO.1)
19-520
FWD

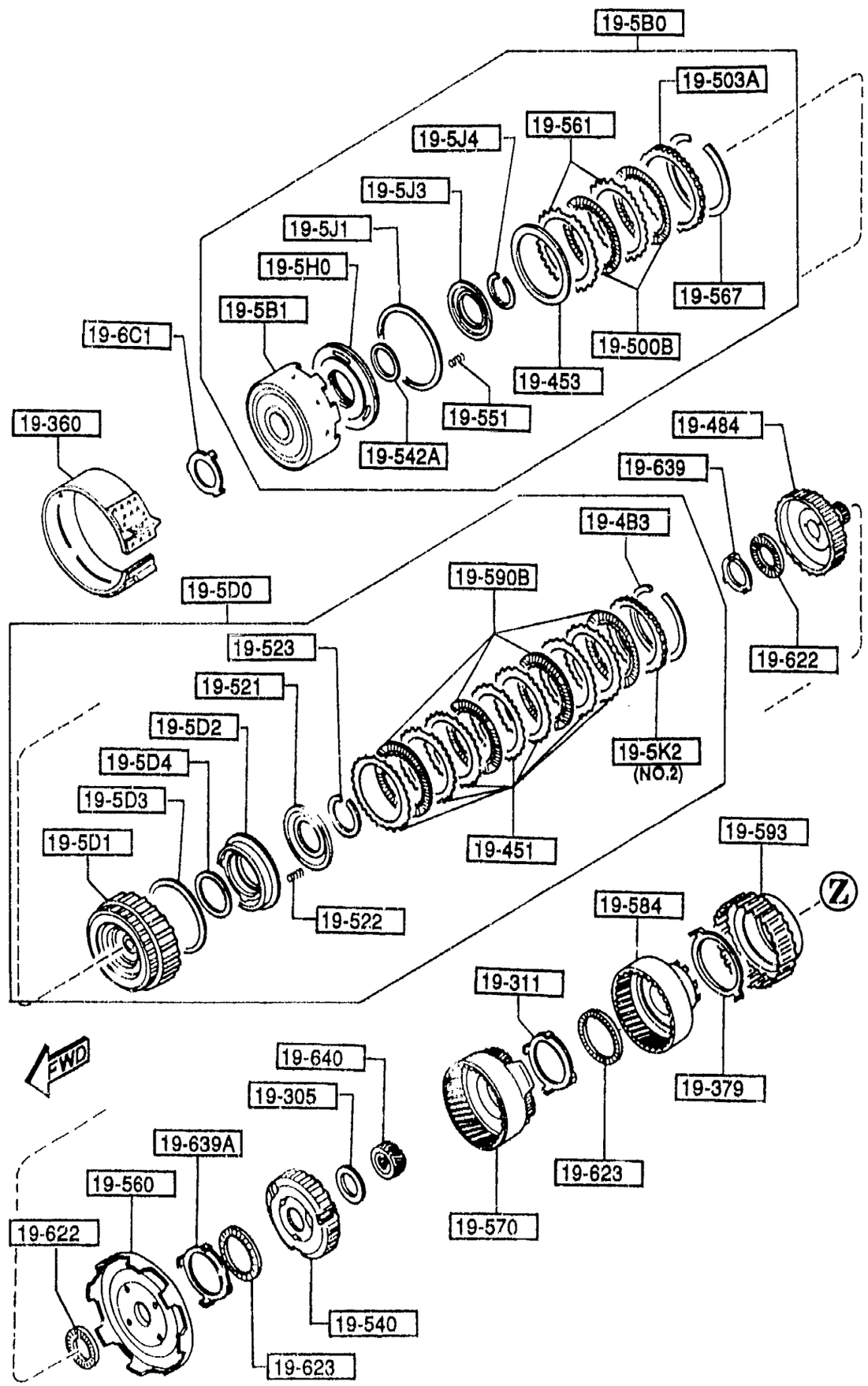

PART NO.	QTY	MODEL/RESTRICTION	MODEL/RESTRICTION	MODEL/RESTRICTION	FROM-TO
19-3B1		RING,SNAP			
BV11-19-3B1	2				
19-3B4		RING,SNAP			
BV45-19-3B4	1				-3A01
BV11-19-3B4	1				3A01-
19-3B5		RING,SNAP			
BV11-19-3B5A	2				
19-3B6		RING,SNAP			
BV11-19-3B6	1				
19-305		BEARING,NEEDLE			
BV11-19-305	1				
19-311		RACE,BEARING			
BV11-19-311	1				
19-360		BAND,BRAKE			
BV65-19-360	1				
19-379		WASHER,TRUST			
BV11-19-379	2				
19-4B1		RING,SNAP			
BV11-19-4B1	1				-3A01
BV30-19-4B1	1				3A01-
19-4B2		RING,SNAP			
BV11-19-4B2	1				
19-4B3		RING,SNAP			
BV11-19-4B3	1				
19-4H6		SEAL,LATHE CUT			
BV11-19-4H6	1				
19-4H7		SEAL,PISTON			
BV11-19-4H7	1	(ILLUST. NO.1)			

3A01 FD333*-300888

1930 CLUTCHES & PLANETARY GEARS (AUTOMATIC) (2/2)

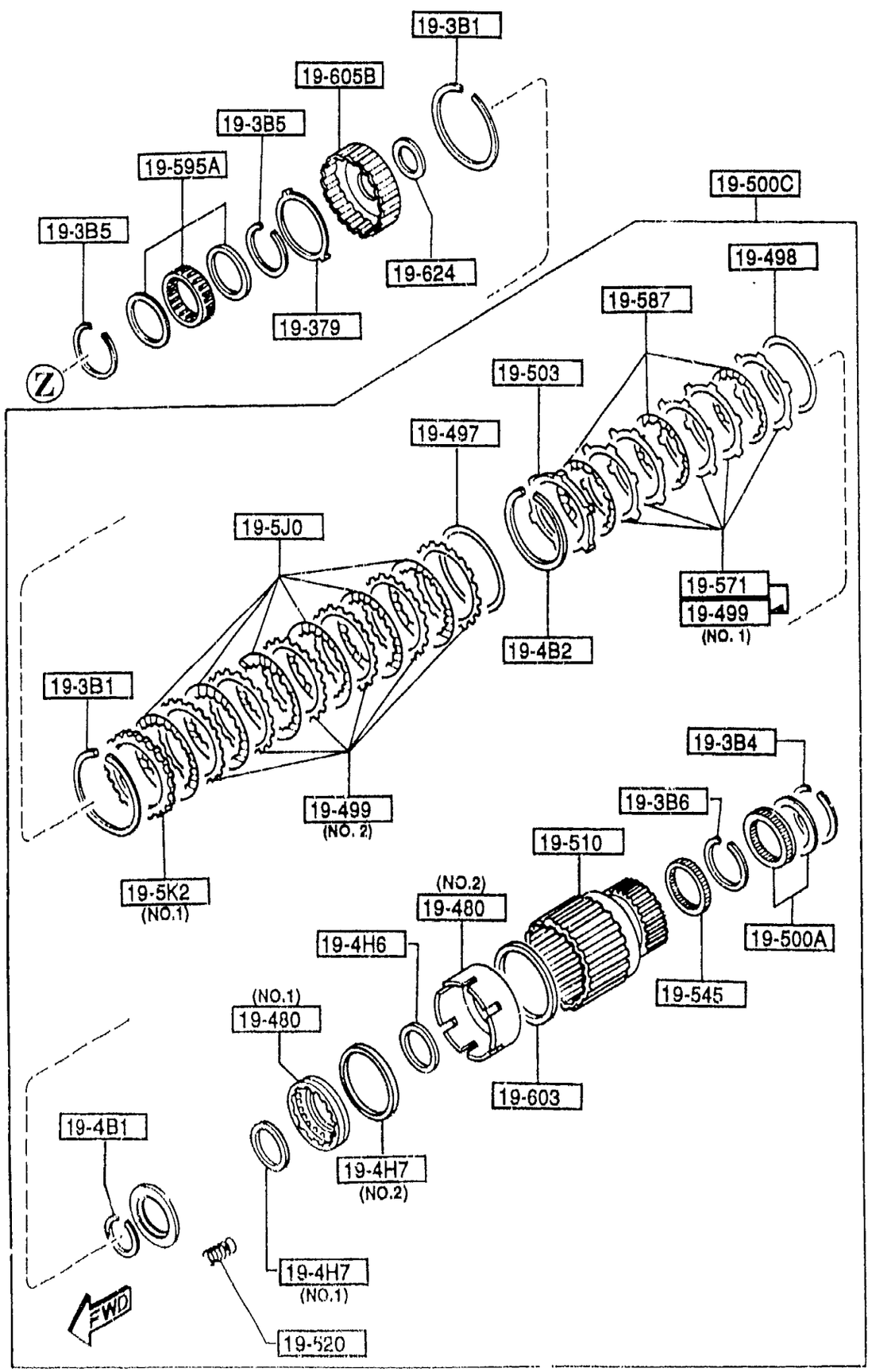

PART NO.	QTY	MODEL/RESTRICTION	MODEL/RESTRICTION	MODEL/RESTRICTION	FROM-TO
CONT'D					
BV30-19-4H7	1	(ILLUST. NO.2)			
19-451		PLATE,DRIVEN			
BV11-19-451	7				
19-453		PLATE,RETAINING			
BV11-19-453	1				
19-480		PISTON,CLUTCH			
BV45-19-3F0	1	(ILLUST. NO.1)			
BV11-19-480	1	(ILLUST. NO.2)			
19-484		HUB,FORWARD CLUTCH			
BV11-19-484	1				
19-497		PLATE,DISHED			
BV11-19-497	1				
19-498		PLATE,DISHED			
BV11-19-498	1				
19-499		PLATE,DRIVEN			
BV45-19-499	6	(ILLUST. NO.2)			
BV11-19-499	5	(ILLUST. NO.1)			3A01-
19-5B0		CLUTCH,REVERSE			
BV11-19-5B0A	1				-4120
A (BV11-19-5B0B)					
BV11-19-5B0B	1				4120-
19-5B1		DRUM,REVERSE			
BV11-19-5B1	1				-4120
A (BV11-19-5B1A)					
BV11-19-5B1A	1				4120-
19-5D0		CLUTCH,HIGH			
BV65-19-5D0A	1				
19-5D1		DRUM,HIGH CLUTCH			
BV11-19-5D1B	1				

3A01 FD333*-300888
4120 FD333*-302035

1930 CLUTCHES & PLANETARY GEARS (AUTOMATIC) (1/2)

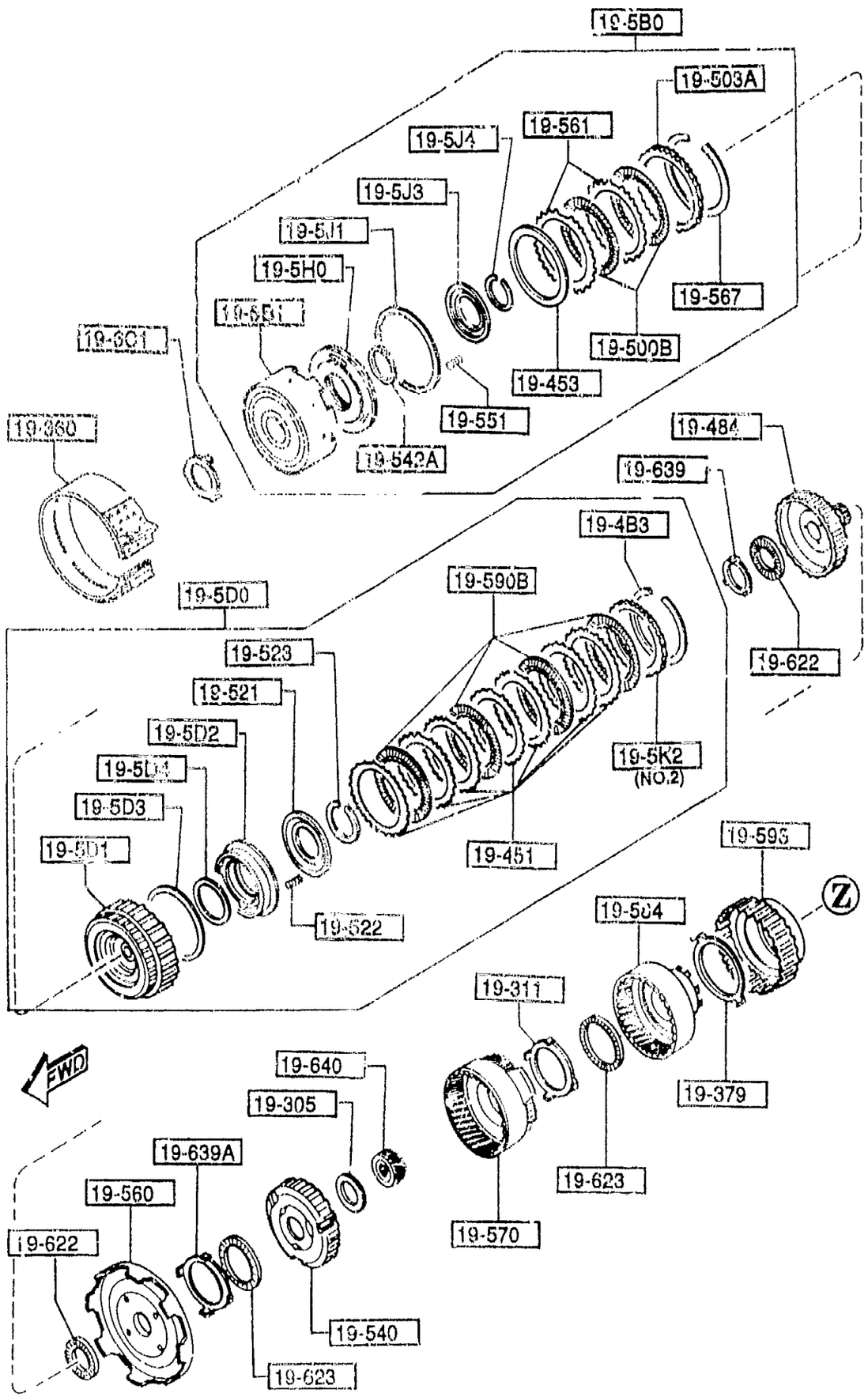

PART NO.	QTY	MODEL/RESTRICTION	MODEL/RESTRICTION	MODEL/RESTRICTION	FROM-TO
19-5D2		PISTON,HIGH CLUTCH			
BV11-19-5D2	1				
19-5D3		SEAL,LATHE CUT			
BV11-19-5D3	1				
19-5D4		SEAL,LATHE CUT			
BV11-19-5D4	1				
19-5H0		PISTON,REVERSE			
BV11-19-5H0	1				
19-5J0		PLATE,DRIVE			
BV11-19-5J0	6				
19-5J1		SEAL,OUTER			
BV11-19-5J1	1				
19-5J3		SPRING,RETURN			
BV11-19-5J3	1				
19-5J4		RING,SNAP			
BV11-19-5J4	1				
19-5K2		PLATE,RETAINING			
BV11-19-5K2	1	T=4MM (ILLUST. NO.1)			
BV65-19-5K2	1	T=3.4MM (ILLUST. NO.2)			
BV11-19-5K3	1	T=4.2MM (ILLUST. NO.1)			
BV65-19-5K3	1	T=3.6MM (ILLUST. NO.2)			
BV11-19-5K4	1	T=4.4MM (ILLUST. NO.1)			
BV65-19-5K4	1	T=3.8MM (ILLUST. NO.2)			
BV11-19-5K5	1	T=4.6MM (ILLUST. NO.1)			
BV65-19-5K5	1	T=4MM (ILLUST. NO.2)			
BV11-19-5K6	1	T=4.8MM (ILLUST. NO.1)			

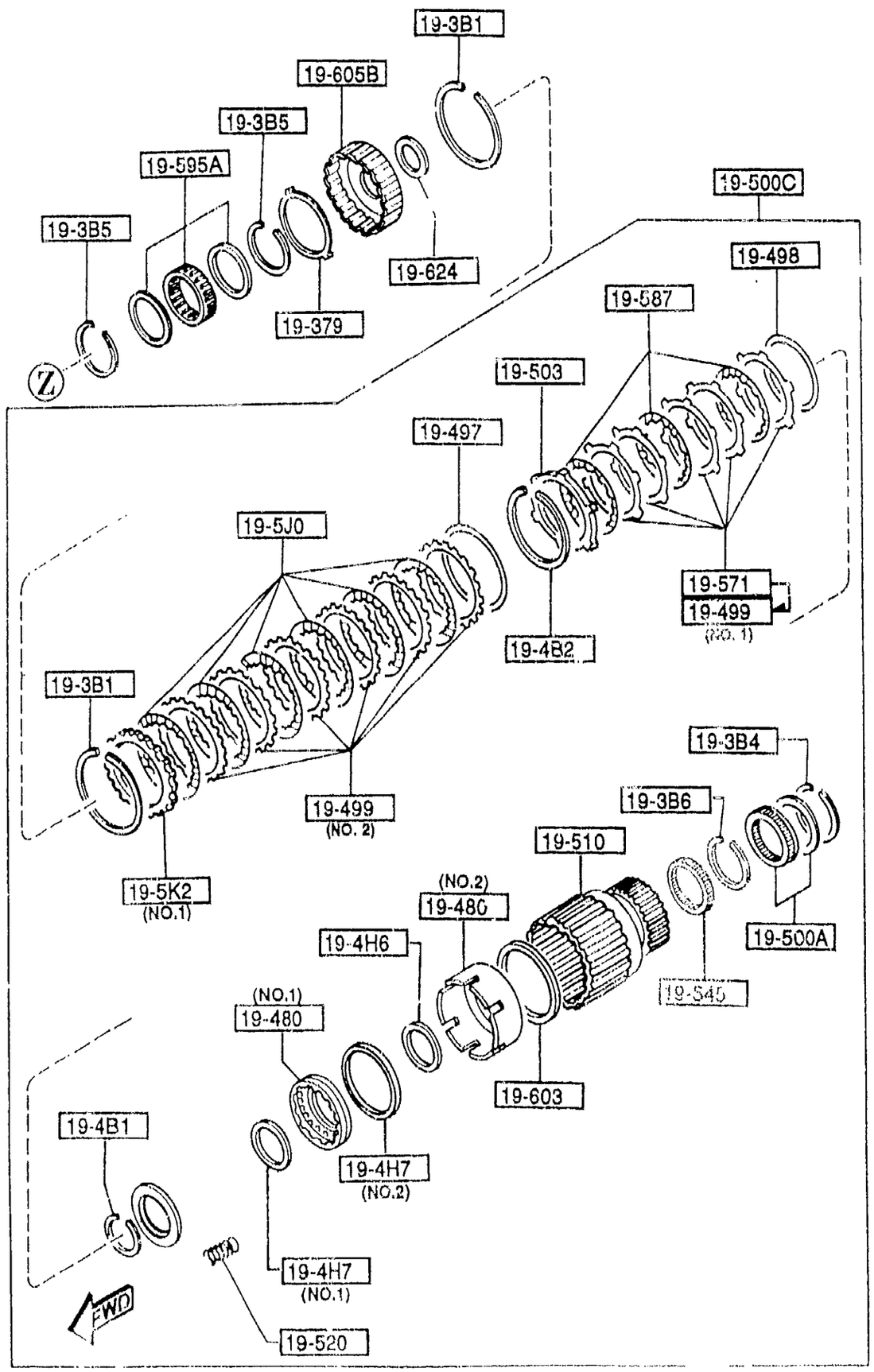

PART NO.	QTY	MODEL/RESTRICTION	MODEL/RESTRICTION	MODEL/RESTRICTION	FROM-TO
CONT'D					
BV65-19-5K6	1	T=4.2MM (ILLUST. NO.2)			
BV11-19-5K7	1	T=5MM (ILLUST. NO.1)			
BV11-19-5K8	1	T=5.2MM (ILLUST. NO.1)			
19-500A		CLUTCH & ONE WAY			
BV45-19-651	1				-3A01
BV11-19-651	1				3A01-
19-500B		PLATE,DRIVEN			
BV11-19-620A	2				
19-500C		CLUTCH			
BV45-19-500	1				-3A01
BV11-19-500A	1				3A01-
19-503		PLATE,RETAINING			
BV11-19-5K9	1	T=5.2MM			
BV11-19-503	1	T=4MM			
BV11-19-504	1	T=4.2MM			
BV11-19-505	1	T=4.4MM			
BV11-19-506	1	T=4.6MM			
BV11-19-507	1	T=4.8MM			
BV11-19-508	1	T=5MM			
19-503A		PLATE,RETAINING			
BV11-19-454A	1	T=4.6MM			
BV11-19-456A	1	T=4.8MM			
BV11-19-457A	1	T=5MM			
BV11-19-458A	1	T=5.2MM			
BV11-19-459A		T=5.4MM			

3A01 FD333*-300888

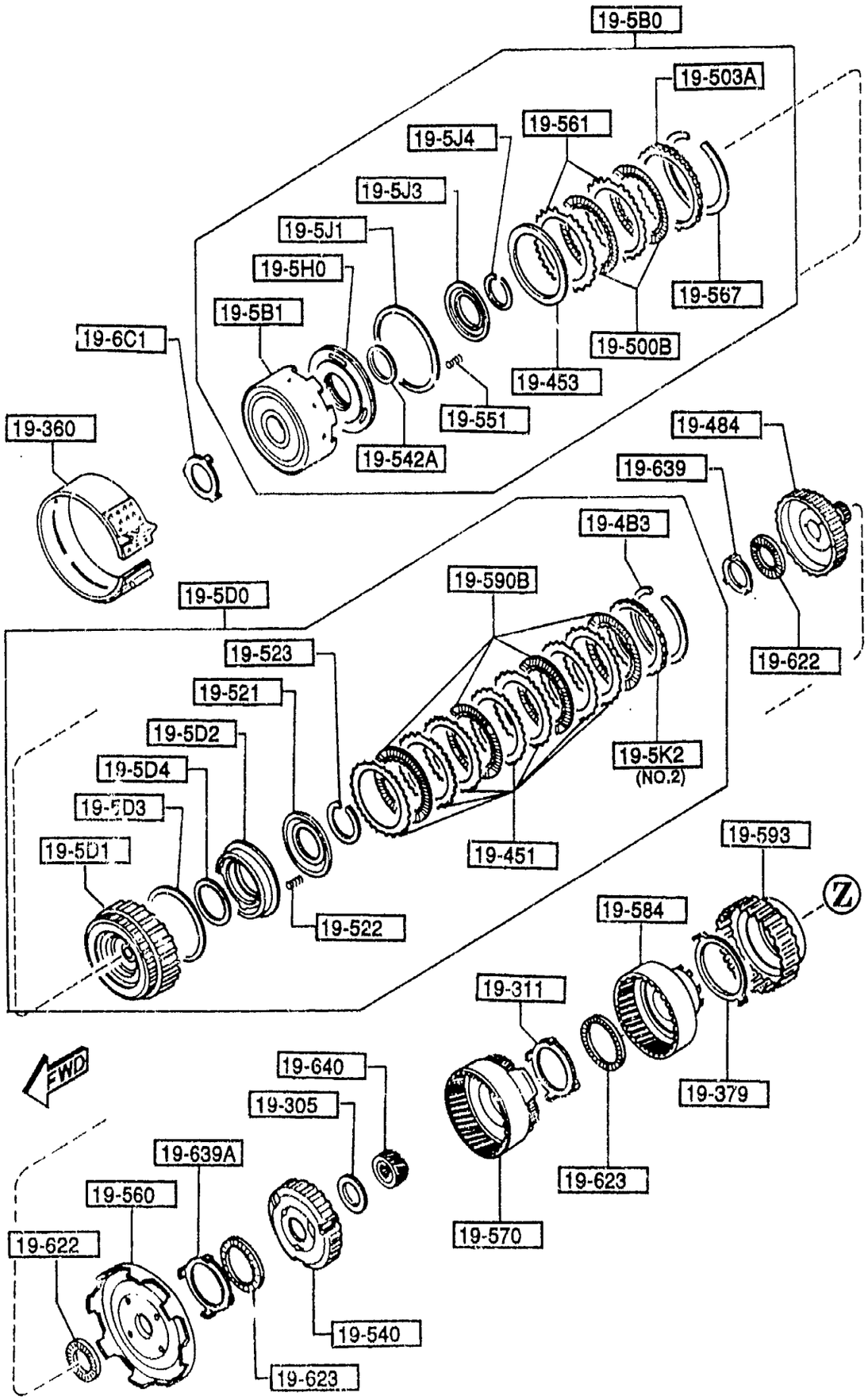

PART NO.	QTY	MODEL/RESTRICTION	MODEL/RESTRICTION	MODEL/RESTRICTION	FROM-TO
CONT'D					
	1				
BV11-19-572A	1	T=5.6MM			
BV11-19-573A	1	T=5.8MM			
+---------+					
| 19-510 |		CLUTCH,REAR			
+---------+					
BV45-19-510	1				-3A01
BV11-19-510A	1				3A01-
+---------+					
| 19-520 |		RETAINER,SPRING-CLU. ONE W			
+---------+					
BV11-19-520	1				
+---------+					
| 19-521 |		RETAINER			
+---------+					
BV11-19-521	1				
+---------+					
| 19-522 |		SPRING			
+---------+					
BV11-19-522	16				
+---------+					
| 19-523 |		RING,SNAP			
+---------+					
BV11-19-523	1				
+---------+					
| 19-540 |		CARRIER,FRONT			
+---------+					
BV45-19-540	1				
+---------+					
| 19-542A |		SEAL,'O'RING			
+---------+					
BV11-19-542	1				
+---------+					
| 19-545 |		BEARING,NEEDLE			
+---------+					
BV56-19-545	1				
+---------+					
| 19-551 |		SPRING,PISTON RETAIN ER			
+---------+					
BV11-19-551	16				
+---------+					
| 19-560 |		GEAR,SUN			
+---------+					
BV65-19-560	1				
+---------+					
| 19-561 |		PLATE,DRIVEN-REV.PIS TON			
+---------+					
BV45-19-561A	2				
+---------+					
| 19-567 |		RING,SNAP			
+---------+					

3A01 FD333*-300886

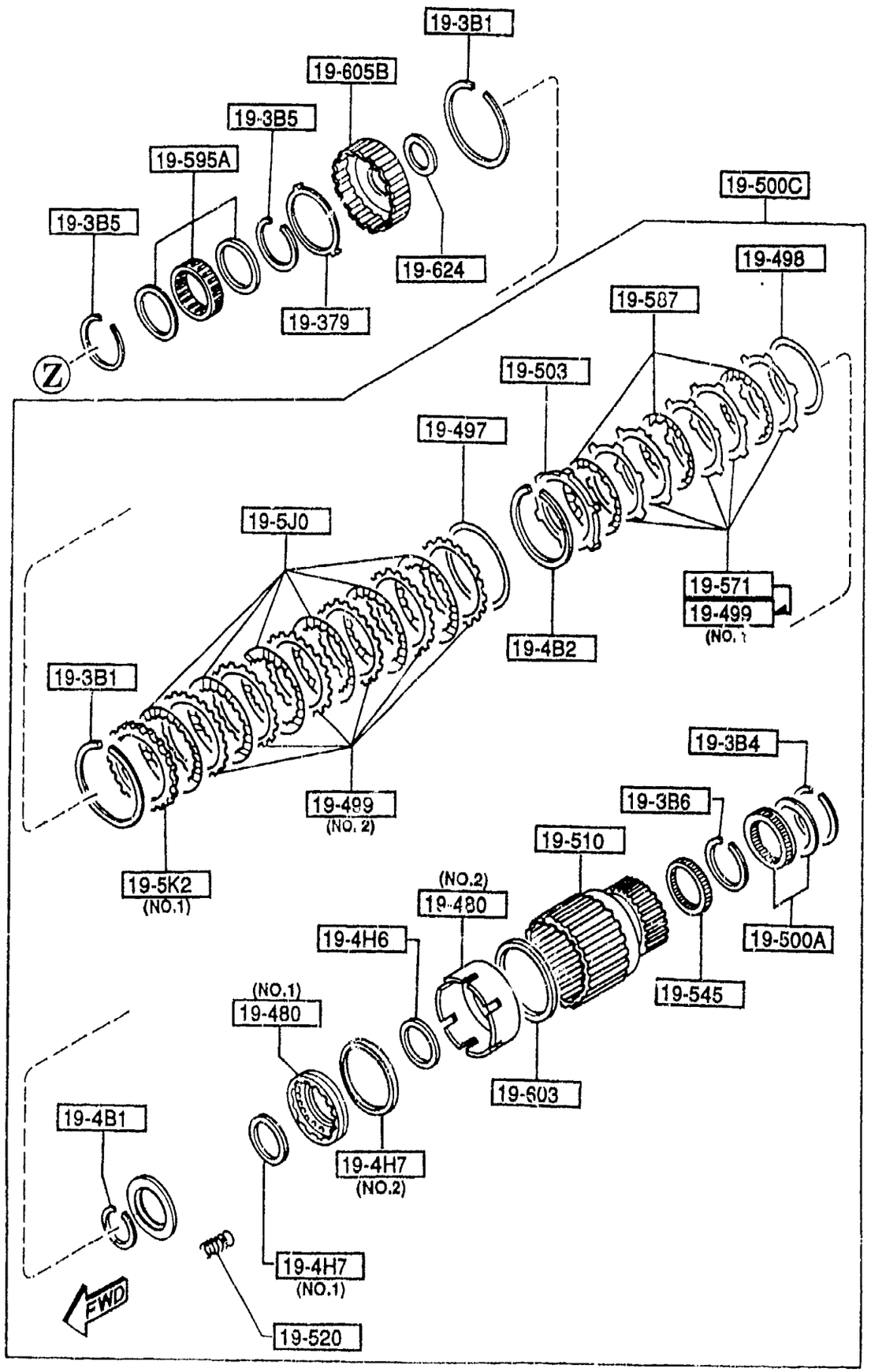

PART NO.	QTY	MODEL/RESTRICTION	MODEL/RESTRICTION	MODEL/RESTRICTION	FROM-TO
CONT'D					
BV11-19-567	1				
+----------+					
| 19-570 |		CARRIER,REAR			
+----------+					
BV46-19-570	1				
+----------+					
| 19-571 |		PLATE,DRIVEN-FRONT			
+----------+					
BV45-19-571	5				-3A01
+----------+					
| 19-584 |		GEAR,INTERNAL			
+----------+					
BV45-19-584	1				
+----------+					
| 19-587 |		PLATE			
+----------+					
BV11-19-587	3				
+----------+					
| 19-590B |		PLATE,DRIVE			
+----------+					
BV11-19-590	4				
+----------+					
| 19-593 |		RACE,OUTER			
+----------+					
BV11-19-593	1				
+----------+					
| 19-595A |		CLUTCH,ONE WAY			
+----------+					
BV11-19-595	1				
+----------+					
| 19-6C1 |		RACE,BEARING			
+----------+					
BV11-19-6C1	1	T=0.8MM			
BV11-19-6C2	1	T=1MM			
BV11-19-6C3	1	T=1.2MM			
BV11-19-6C4	1	T=1.4MM			
BV11-19-6C5	1	T=1.6MM			
BV11-19-6C6	1	T=1.8MM			
BV11-19-6C7	1	T=2MM			
+----------+					
| 19-603 |		SEAL,PISTON			
+----------+					
BV11-19-603	1				

3A01 FD333*-300888

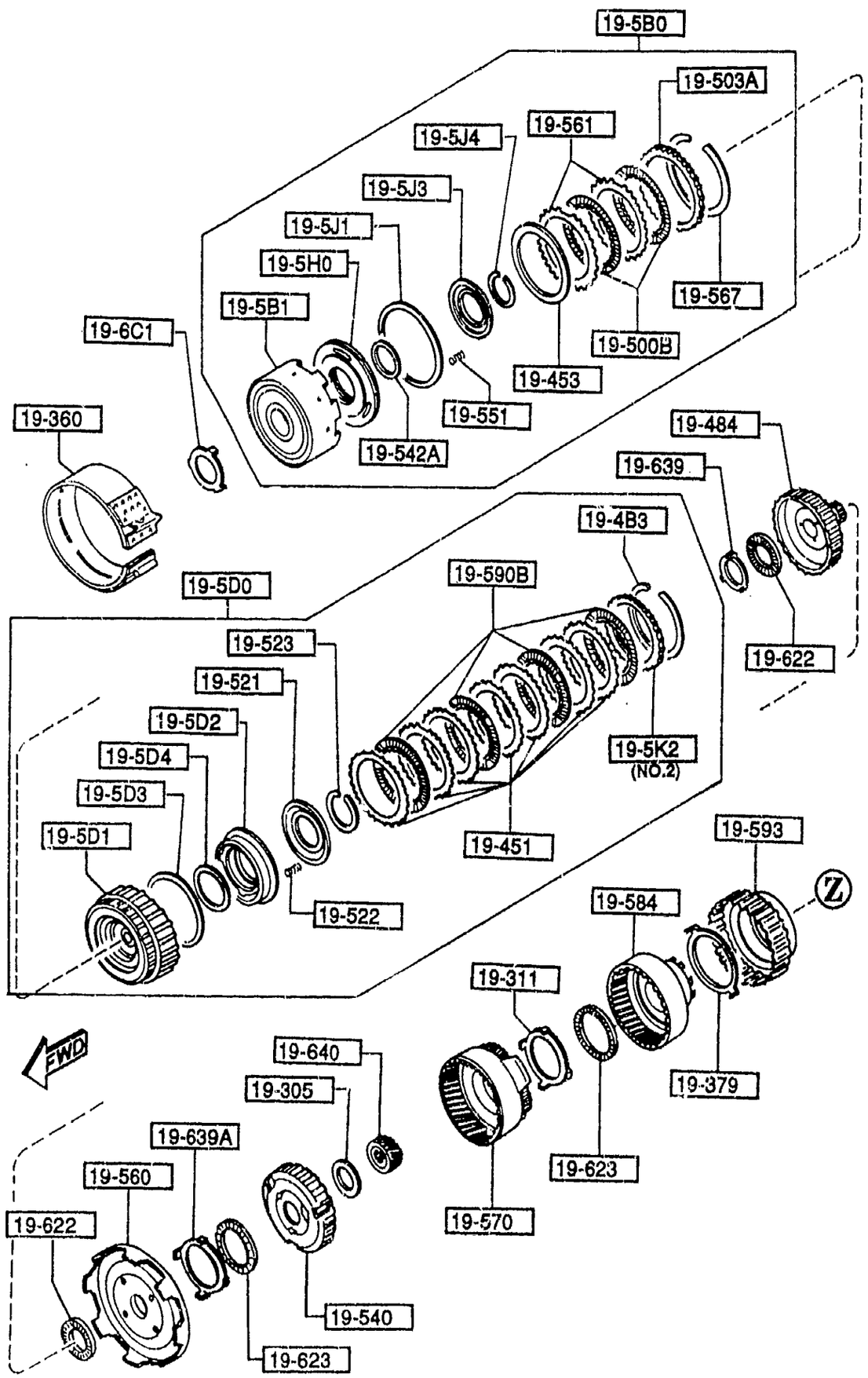

PART NO.	QTY	MODEL/RESTRICTION	MODEL/RESTRICTION	MODEL/RESTRICTION	FROM-TO
19-605B		HUB			
BV11-19-605	1				
19-622		BEARING,NEEDLE			
0338-19-622	2				
19-623		BEARING,NEEDLE			
BV11-19-307	2				
19-624		BEARING,NEEDLE			
BV55-19-304	1				
19-639		RACE,BEARING			
BV11-19-303	1				
19-639A		RACE,BEARING			
BV11-19-306	1				
19-640		GEAR,SMALL SUN			
BV46-19-6F1	1				

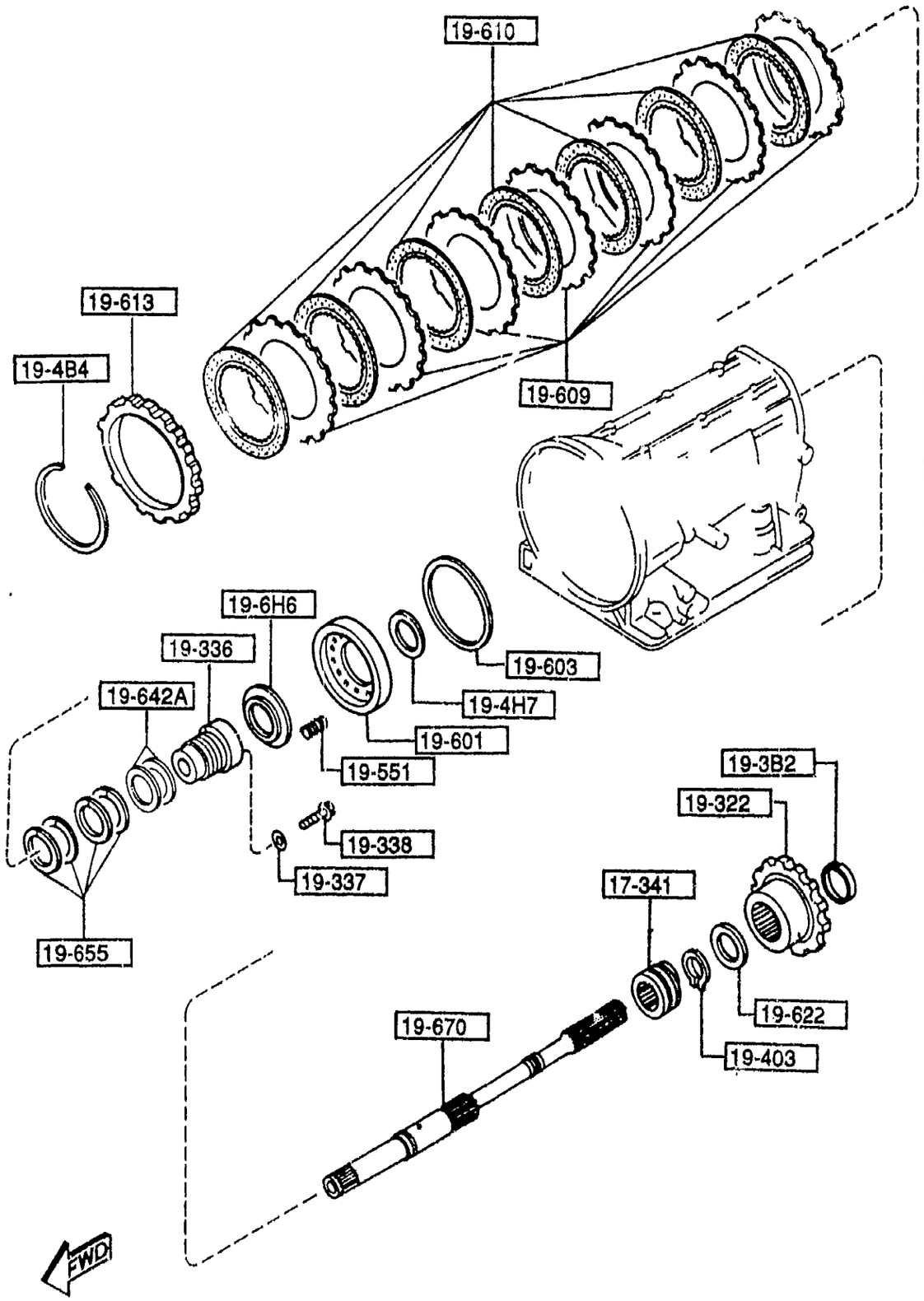

PART NO.	QTY	MODEL/RESTRICTION	MODEL/RESTRICTION	MODEL/RESTRICTION	FROM-TO
17-341		GEAR,DRIVE			
BV41-17-341	1				
19-3B2		RING,SNAP			
BV11-19-3B2	1				
19-322		GEAR,PARKING			
BV11-19-322	1				
19-336		RACE,INNER			
BV55-19-336	1				
19-337		WASHER,PLAIN			
BV11-19-337	8				
19-338		BOLT			
BV11-19-338	8				
19-4B4		RING,SNAP			
BV11-19-4B4	1				
19-4H7		SEAL,PISTON			
BV11-19-4H7	1				
19-403		RING,SNAP-PISTON STEM LOW			
BV40-19-403	1				
19-551		SPRING,PISTON RETAINER			
BV65-19-551	18				
19-6H6		RETAINER,SPRING			
BV65-19-6H6	1				
19-601		PISTON,LOW & REVERSE			
BV65-19-601	1				
19-603		SEAL,PISTON			
BV11-19-603	1				
19-609		PLATE,DRIVEN			
BV45-19-609	7				

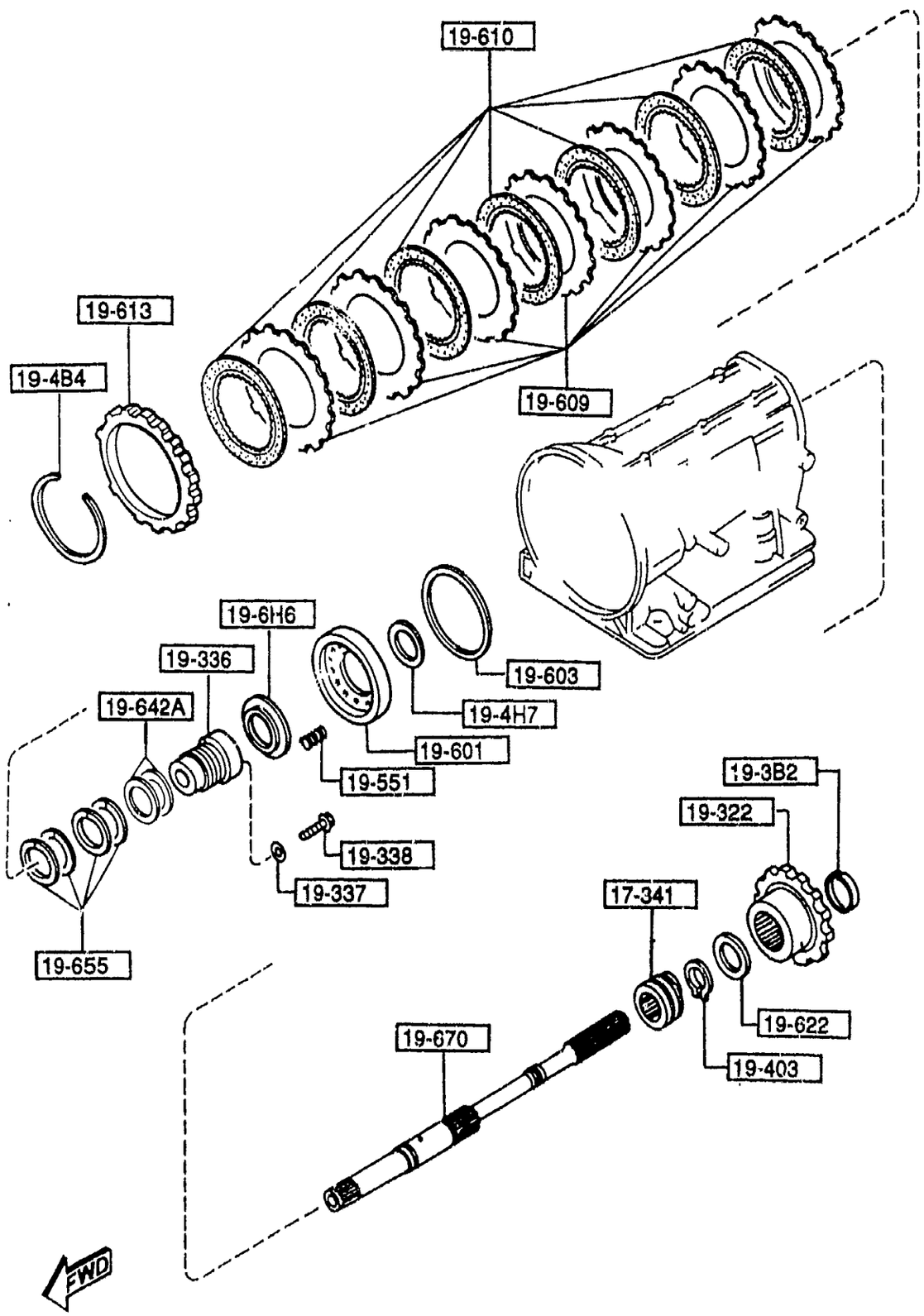

PART NO.	QTY	MODEL/RESTRICTION	MODEL/RESTRICTION	MODEL/RESTRICTION	FROM-TO
19-610		PLATE,DRIVEN			
BV56-19-610	7				
19-613		PLATE,RETAINING			
BV11-19-613	1	T=9.8MM			
BV45-19-613	1	T=8.4MM			
BV65-19-613	1	T=8MM			
BV66-19-613	1	T=8.2MM			
BV45-19-615	1	T=8.6MM			
BV65-19-615	1	T=7.6MM			
BV11-19-616	1	T=9MM			
BV45-19-616	1	T=8.8MM			
BV65-19-616	1	T=7.8MM			
BV65-19-617	1	T=6.8MM			
BV65-19-618	1	T=7MM			
BV65-19-623	1	T=7.2MM			
BV65-19-625	1	T=7.4MM			
BV65-19-628	1	T=6.6MM			
19-622		BEARING,NEEDLE			
BV11-19-622	1				
19-642A		WASHER,THRUST			
BV11-19-5F1	2				
19-655		RING,SEAL			
BV11-19-655	4				
19-670		SHAFT			
BV45-19-670	1				

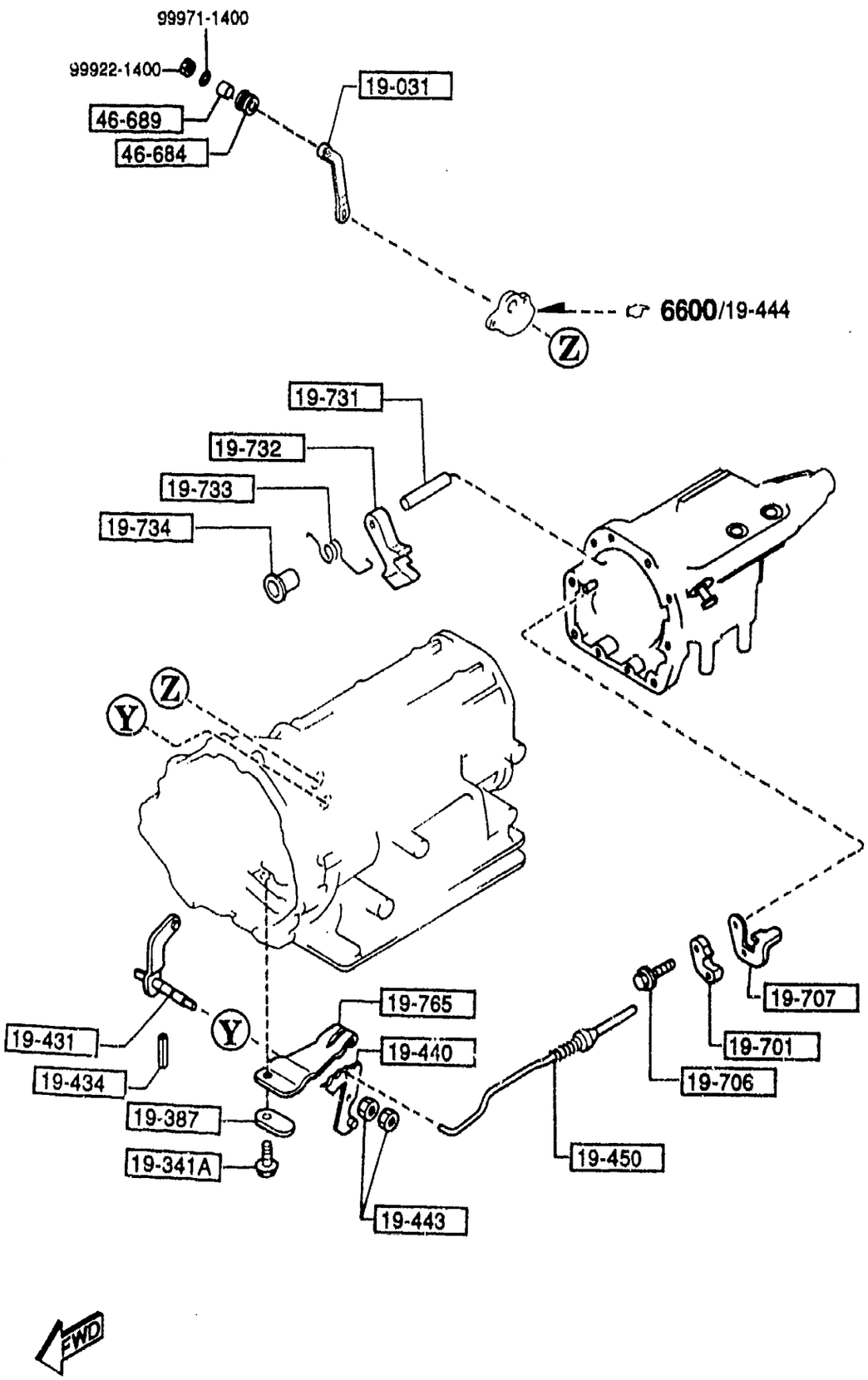

PART NO.	QTY	MODEL/RESTRICTION	MODEL/RESTRICTION	MODEL/RESTRICTION	FROM-TO
19-031		LEVER,SELECT			
BV65-19-030	1				
19-341A		BOLT			
BV11-19-341	1				
19-387		SPACER			
BV11-19-387A	1				
19-431		SHAFT,MANUAL			
BV11-19-431	1				
19-434		PIN			
BV11-19-434	1				
19-440		PLATE,MANUAL			
BV65-19-440	1				
19-443		NUT,SHAFT			
BV45-19-443	2				
19-450		ROD,PARKING			
BV11-19-450	1				
19-701		SUPPORTER,ACTUATOR			
BV12-21-471	1				
19-706		BOLT			
BV11-21-475	2				
19-707		GUIDE,PARKING ROD			
BV11-19-707	1				
19-731		SHAFT,PARKING PAWL			
BV11-21-472	1				
19-732		PAWL,PARKING			
BV11-19-732	1				
19-733		SPRING,PAWL RETURN			
BV11-19-733	1				

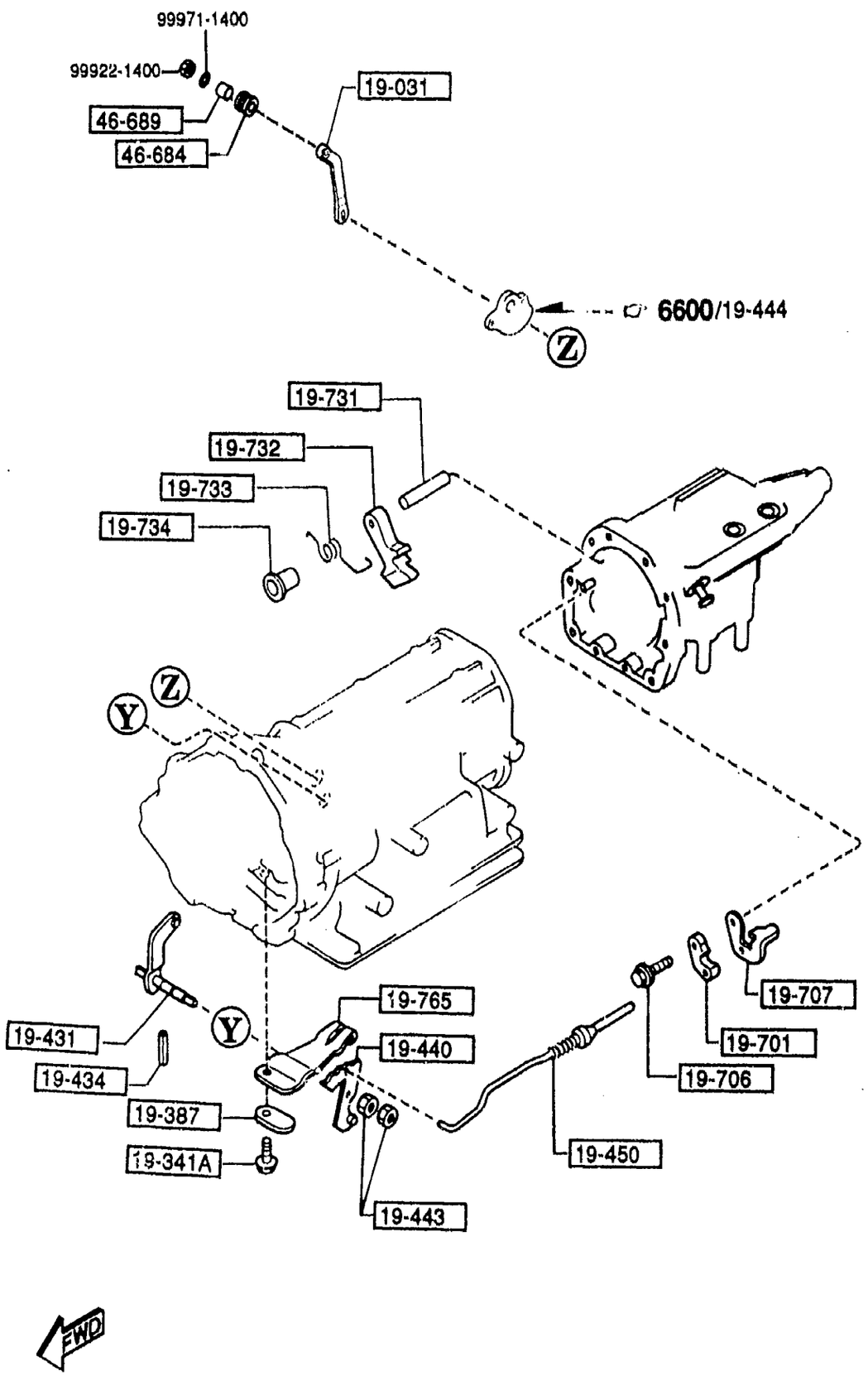

PART NO.	QTY	MODEL/RESTRICTION	MODEL/RESTRICTION	MODEL/RESTRICTION	FROM-TO
19-734		SPACER,DOWEL			
BV11-19-734	1				
19-765		SPRING			
BV65-19-765A	1				
46-684		BUSH			
H380-46-684	1				
46-689		SPACER,CONTROL CABLE			
H380-46-689	1				

22-900

1-GASKET, OIL PUMP····· (1)
2-SEAL, OIL····· (1)
3-RING, SEAL····· (1)
4-RING, SEAL····· (1)
5-RING, SEAL····· (1)
6-GASKET····· (1)
7-SEAL, PISTON····· (1)
8-SEAL, PISTON····· (1)
9-RING, "O"····· (1)
10-SEAL, LATHE CUT····· (1)
11-SEAL, PISTON····· (1)
12-SEAL, PISTON····· (1)
13-SEAL, MANUAL SHAFT LEVER· (1)
14-SEAL, "O" RING····· (3)
15-RING, "O"····· (2)
16-SEAL, LATHE CUT····· (1)
17-SEAL, LATHE CUT····· (1)
18-SEAL, OUTER····· (1)
19-SEAL, "O" RING····· (1)
20-SEAL, PISTON····· (2)
21-RING, SEAL····· (4)
22-GASKET, EXTENTION····· (1)
23-GASKET, OIL PAN····· (1)
24-RING, "O"····· (1)
25-RING, "O"-UP, ACCUM····· (2)
26-RING, "O"-ACCUMLATOR····· (1)
27-RING, "O"-ACCUMLATOR····· (1)
28-RING, "O"····· (1)
29-GASKET, BODY-LWR····· (1)
30-GASKET, BODY-UPP····· (1)
31-SEAL, SIDE····· (2)
32-SEAL, FLANGE····· (1)
33-SEAL, LATHE CUT····· (1)
34-RING, "O"····· (1)

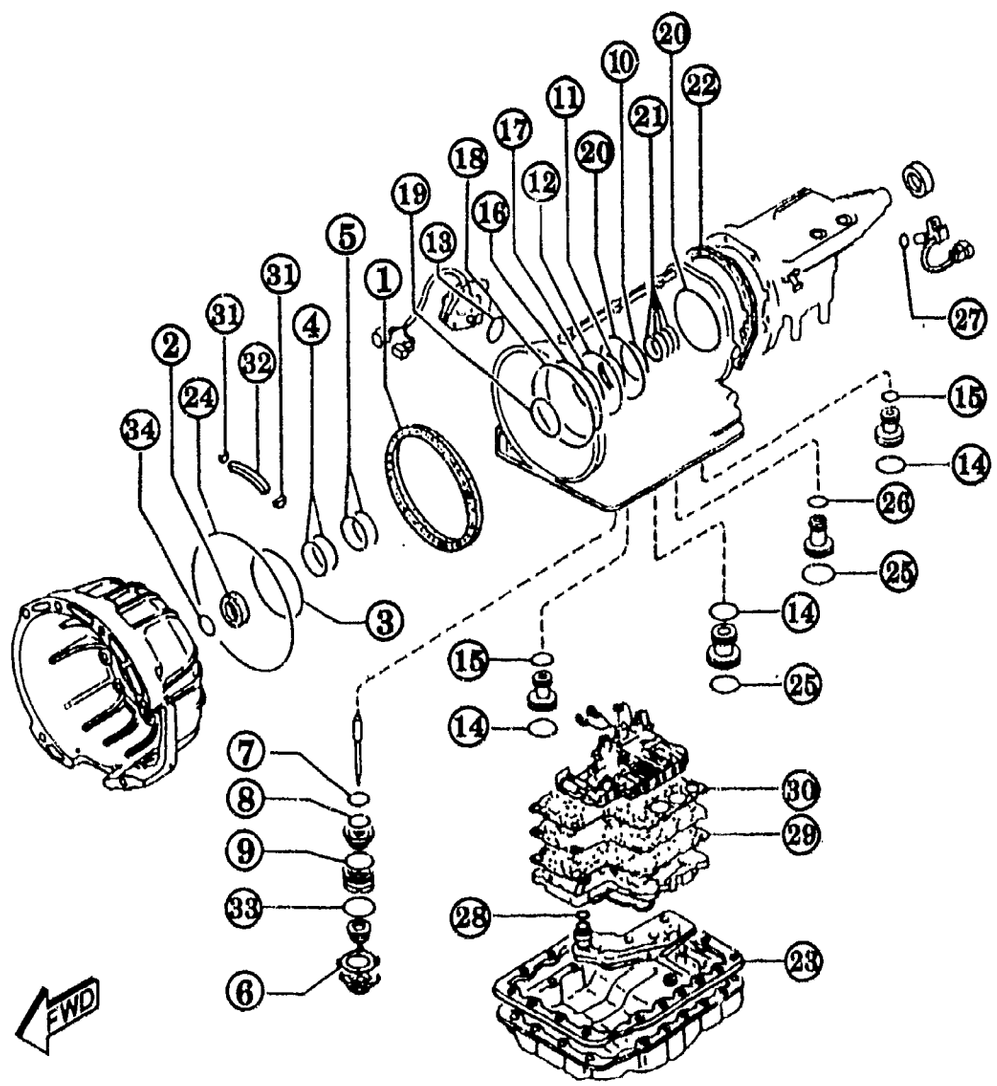

AUFA05

1960 -1 * GASKET & SEAL KIT (AUTOMATIC)

PART NO.	QTY	MODEL/RESTRICTION	MODEL/RESTRICTION	MODEL/RESTRICTION	FROM-TO
22-900		GASKET & SEAL KIT			
BV65-22-900	1				

CAT. AUFA05-03

1995-03