0900 KEY SETS

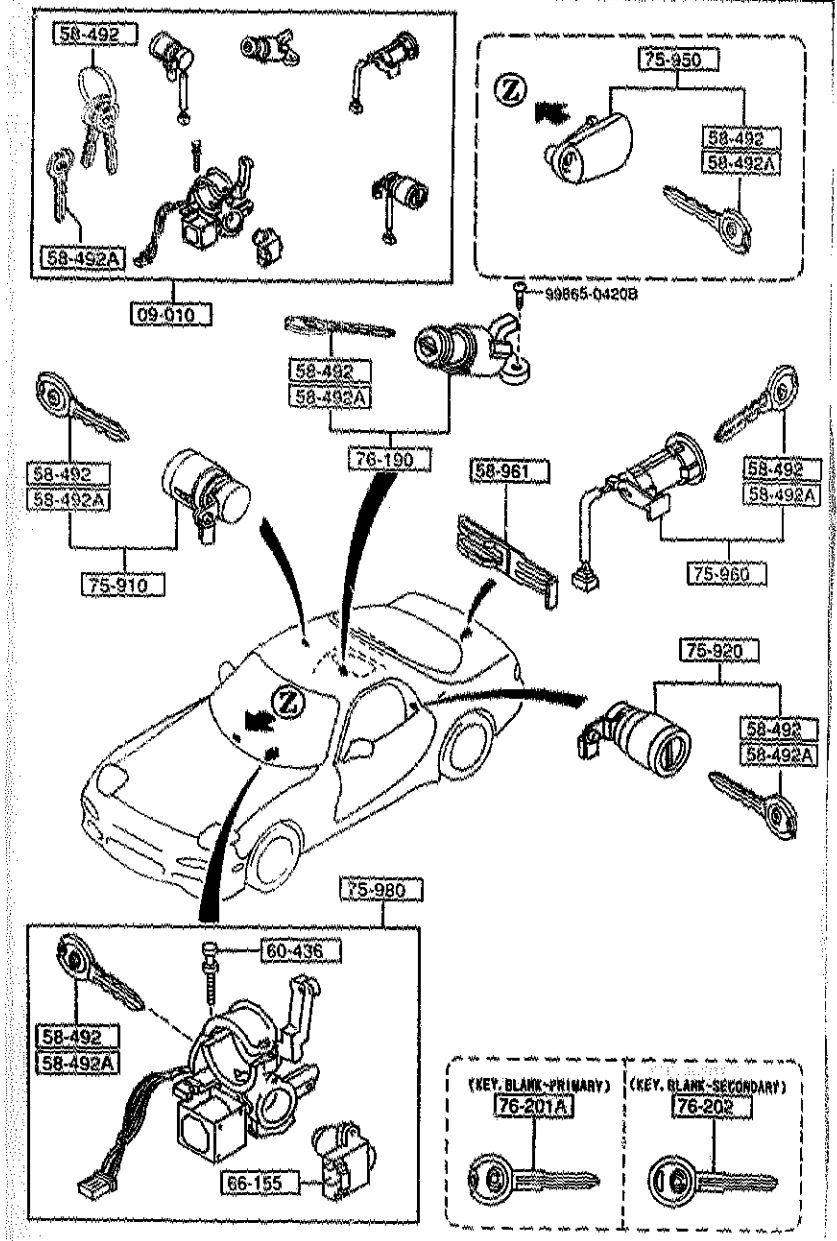

AUFA08

0900 -1 KEY SETS

PART NO.	QTY	MODEL/RESTRICTION	MODEL/RESTRICTION	MODEL/RESTRICTION	FROM-TO
09-010		KEY SET			
FD15-09-010C	1	(MT)			-5301
A (FD15-09-010D)					
FD17-09-010C	1	(AT)			-5301
A (FD17-09-010D)					
FD15-09-010D	1	(MT)			5301-5508
AN(FD15-09-010E)					
FD17-09-010D	1	(AT)			5301-5508
AN(FD17-09-010E)					
FD15-09-010E	1	(MT)			5508-
FD17-09-010E	1	(AT)			5508-
58-492		KEY,PRIMARY			
FD01-58-492	2	KEY NO. IS REQUIRED			
58-492A		KEY,SECONDARY			
FD01-58-493	1	KEY NO. IS REQUIRED			
58-961		FASTENER,KEY CYL.			
GJ21-56-902A	1				
60-436		BOLT,SET			
H043-66-154	2				
66-155		SWITCH,IGNITION			
FD01-66-151	1				-5301
A (FD01-66-151A)					
FD01-66-151A	1				5301-
75-910		KEY SUB SET(R),DOOR			
FD01-76-210B	1				-5301
FD01-76-210C	1				5301-5801
FD01-76-210D	1				5801-
75-920		KEY SUB SET(L),DOOR			
FD01-76-220B	1				-5301
FD01-76-220C	1				5301-5801
FD01-76-220D	1				5801-

5301 FD333 -400027
5508 FD333 -400229
5801 FD333 -400230

CAT. AUFA06-04

1997-01

0900 KEY SETS

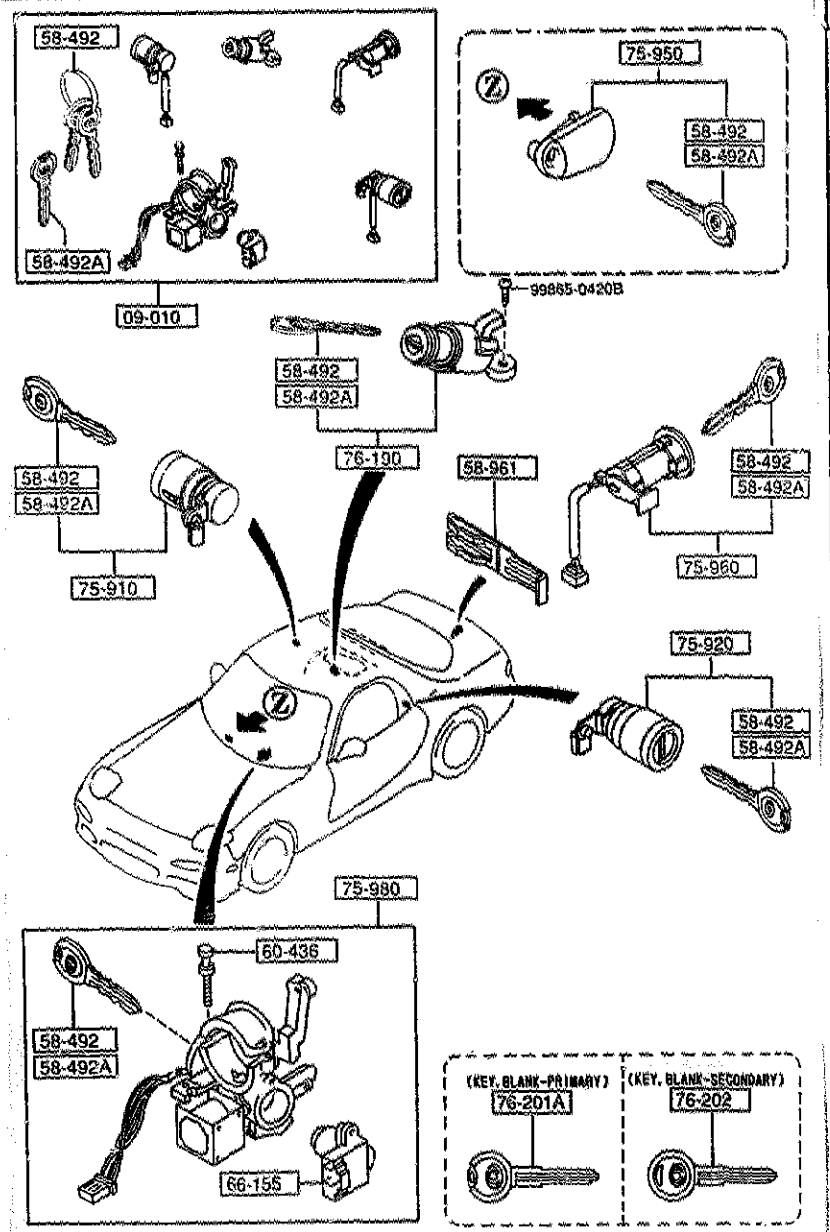

AUFA06

0900 -2 * KEY SETS

PART NO.	QTY	MODEL/RESTRICTION	MODEL/RESTRICTION	MODEL/RESTRICTION	FROM-TO
75-950		KEY SUB SET,GLOVE			
FD15-76-250A	1				-5301
FD15-76-250B	1				5301-
75-960		KEY SUB SET,LIFT GAT E			
FD01-76-260	1				-5301
FD01-76-260A	1				5301-5801
FD01-76-260B	1				5801-
75-980		KEY SUB SET,IG.SWICH			
FD01-76-290	1	(MT)			-5301
FD02-76-290	1	(AT)			-5301
FD02-76-290B	1	(MT)			5301-
FD02-76-290B	1	(AT)			5301-
76-190		KEY SUB SET,STOWAGE			
FD01-76-190	1				-5301
FD01-76-190A	1				5301-
76-201A		KEY,BLANK-PRIMARY			
FD01-76-201	1				-5301
BOYA-76-201	1				5301-
76-202		KEY,BLANK-SECONDARY			
FD01-76-202	1				-5301

5301 FD333 -400027
5801 FD333 -400230

CAT. AUFA06-04

1997-01

5000 FRONT BUMPER

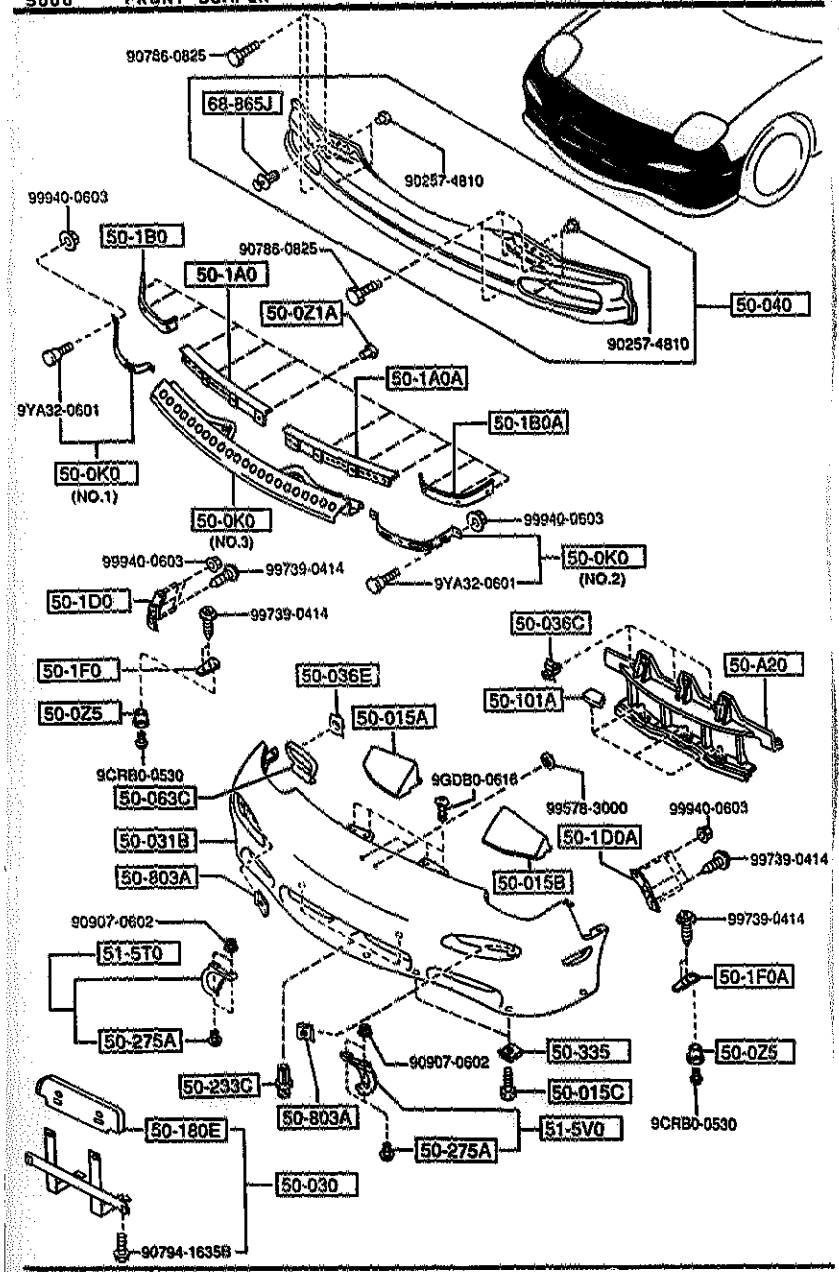

AUFA06

5000 -1 FRONT BUMPER

PART NO.	QTY	MODEL/RESTRICTION	MODEL/RESTRICTION	MODEL/RESTRICTION	FROM-TO
50-A20		GUIDE,AIR			
FD01-50-A21	1				
50-0K0		RETAINER,FASCIA			
FD01-50-0KXA	1	(ILLUST. NO.1)			
FD01-50-0K0A	1	(ILLUST. NO.2)			
FD01-50-0K1B	1	(ILLUST. NO.3)			
50-0Z1A		RIVET,BLIND			
BR70-50-0Z1	13				
50-0Z5		GROMMET,SCREW			
FD01-50-0Z5	2				
50-015A		SPACER			
FD01-50-CR0	1				
50-015B		SPACER			
FD01-50-CS0	1				
50-015C		BOLT			
BR70-50-0Z2	4				
50-030		HOLDER,NO. PLATE			
FD01-50-170B	1				
50-031B		FACE,FRONT BUMPER			
FD01-50-031C	1	PAINT TO MATCH			
50-036C		FASTENER			
BF67-50-033	3				
50-036E		CLIP			
GJ21-50-049	2	((MT)>(NOR. SUSP))			
50-040		REINFORCEMENT,BUMPER			
FD01-50-070B	1				
50-063C		COVER(R),BUMPER			
FD01-51-385	1	((MT)>(NOR. SUSP))			

CAT. AUFA06-04

1997-01

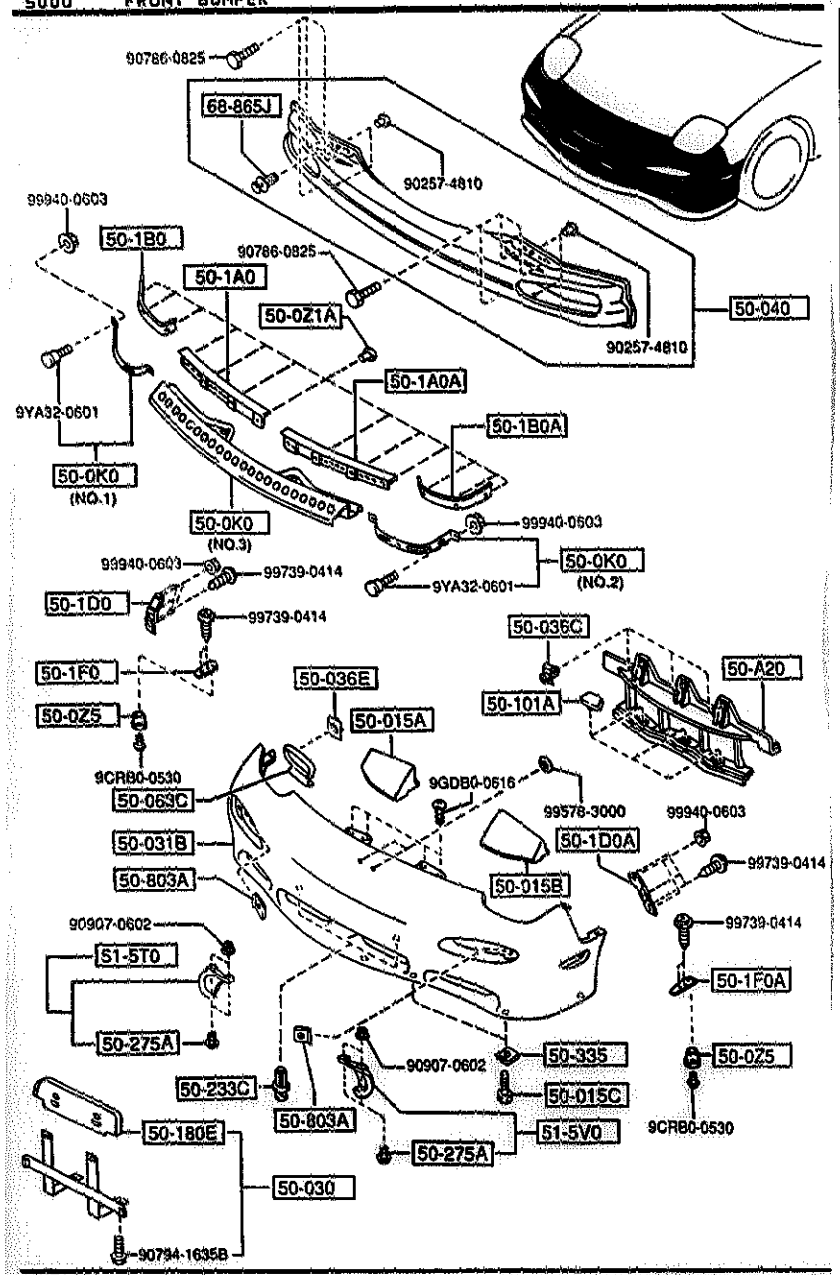

AUFA06

5000 -2 FRONT BUMPER

PART NO.	QTY	MODEL/RESTRICTION	MODEL/RESTRICTION	MODEL/RESTRICTION	FROM-TO
50-1A0 FD01-50-1AYB	1	PLATE NO.1(R),SET-F.			
50-1A0A FD01-50-1AXB	1	PLATE NO.1(L),SET-F.			
50-1B0 FD01-50-1B0A	1	PLATE NO.2(R),SET-F. BUMPER			
50-1B0A FD01-50-1C0A	1	PLATE NO.2(L),SET-F. BUMPER			
50-1D0 FD01-50-1D0	1	PLATE NO.3(R),SET-F. BUMPER			
50-1D0A FD01-50-1E0	1	PLATE NO.3(L),SET-F. BUMPER			
50-1F0 FD01-50-1G1	1	PLATE NO.4(R),SET-F. BUMPER			
50-1F0A FD01-50-1F1	1	PLATE NO.4(L),SET-F. BUMPER			
50-101A NA01-50-101A	3	COVER,GRILLE			
50-180E FB01-50-144	1	PROTECTOR,NO. PLATE			
50-233C BF02-50-233	2	FASTENER,REAR BUMPER			
50-275A D001-50-222	4	SCREW (W/O SUN ROOF)			
50-335 FB01-50-133C	10	NUT,CLIP			
50-803A G158-50-803	2	NUT,SIDE PROTECTOR			

5000 FRONT BUMPER

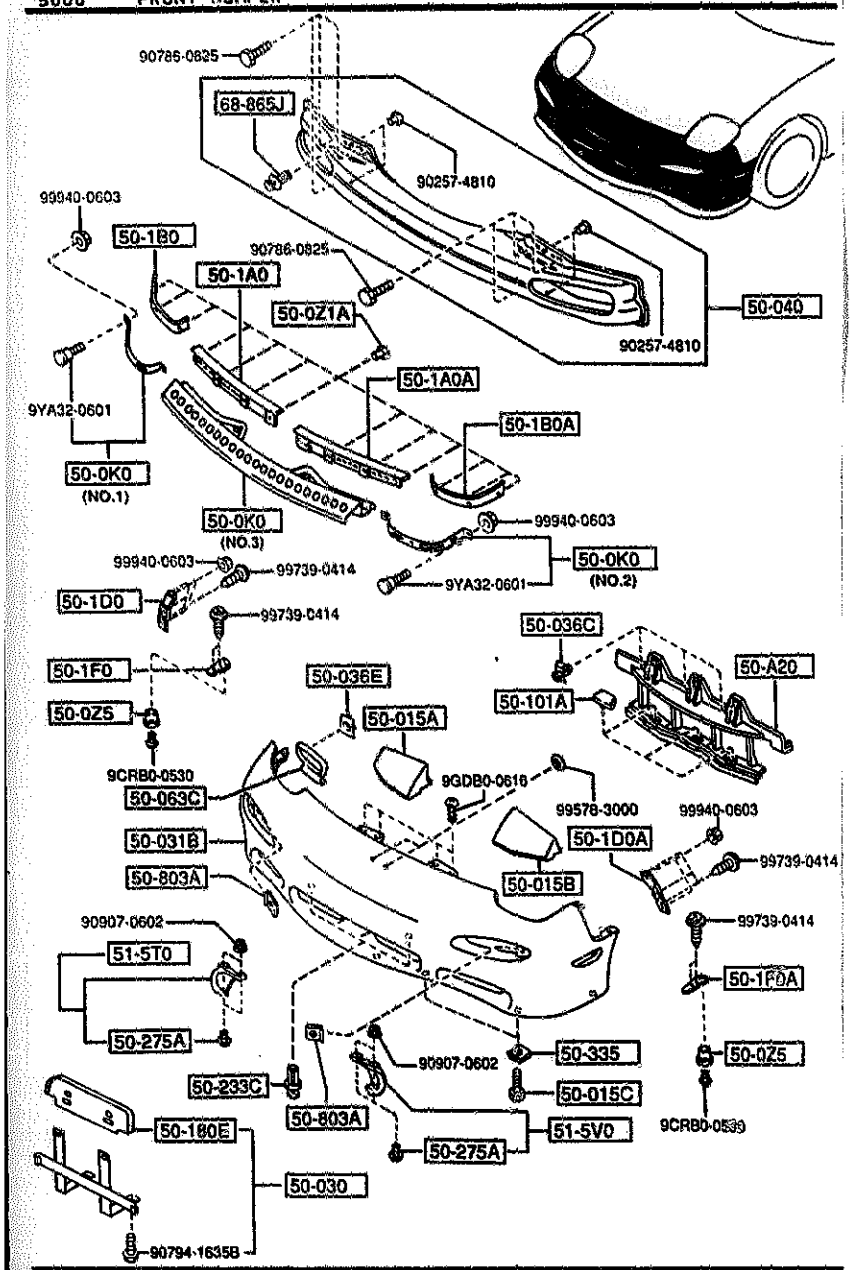

AUFA06

5000 -3 * FRONT BUMPER

PART NO.	QTY	MODEL/RESTRICTION	MODEL/RESTRICTION	MODEL/RESTRICTION	FROM-TO
51-5T0		COVER(R),BUMPER			
FD01-51-5T0	1	(W/O SUN ROOF)			
51-5V0		COVER(L),BUMPER			
FD01-51-5V0	1	(W/O SUN ROOF)			
68-865J		FASTENER,TRK.S.TRIM			
B103-68-865	1				

5010 REAR BUMPER

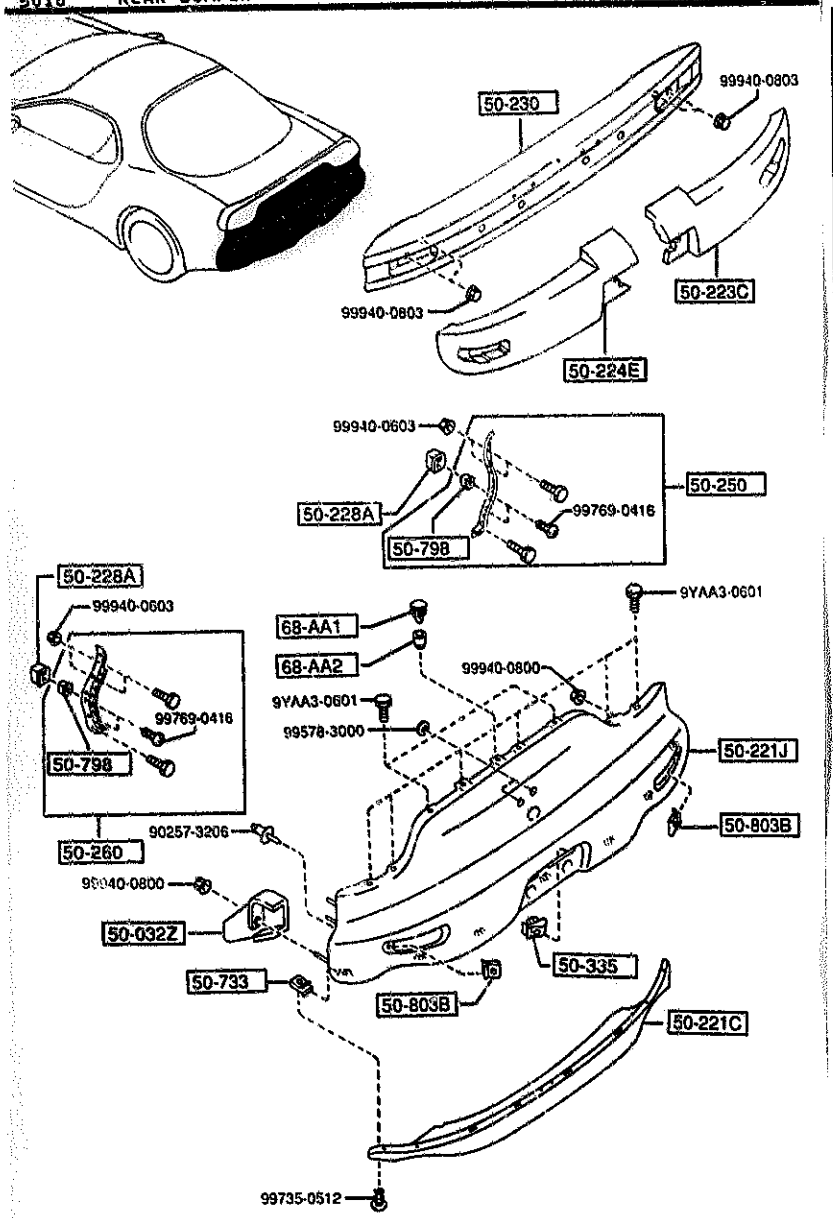

5010 -1 REAR BUMPER

PART NO.	QTY	MODEL/RESTRICTION	MODEL/RESTRICTION	MODEL/RESTRICTION	FROM-TO
50-032Z FD01-50-1J1	1	PROTECTOR(L)			
50-221C FD01-50-231A	1	BUMPER,REAR LOWER PAINT TO MATCH			
50-221J FD01-50-221B	1	BUMPER,REAR PAINT TO MATCH			
50-223C FD07-50-31X	1	FOAM(R),ENGY.ABS.-RR BUMP			
50-224E FD07-50-31Y	1	FOAM(L),ENGY.ABS.-RR BUMP			
50-228A FD01-50-AF5	4	GROMMET			
50-230 FD01-50-260A	1	REINFORCEMENT,BUMPER			
50-250 FD01-50-3A0	1	BRACKET(R),RR.BUMPER			
50-260 FD01-50-3B0	1	BRACKET(L),RR.BUMPER			
50-335 FB01-50-133C	2	NUT,CLIP			
50-733 FB01-50-733	7	NUT,SPRING-AIR DAM SKIRT			
50-798 FD01-50-799	4	SCREW,GROMMET			
50-803B FD01-50-803	2	NUT,SPRING			

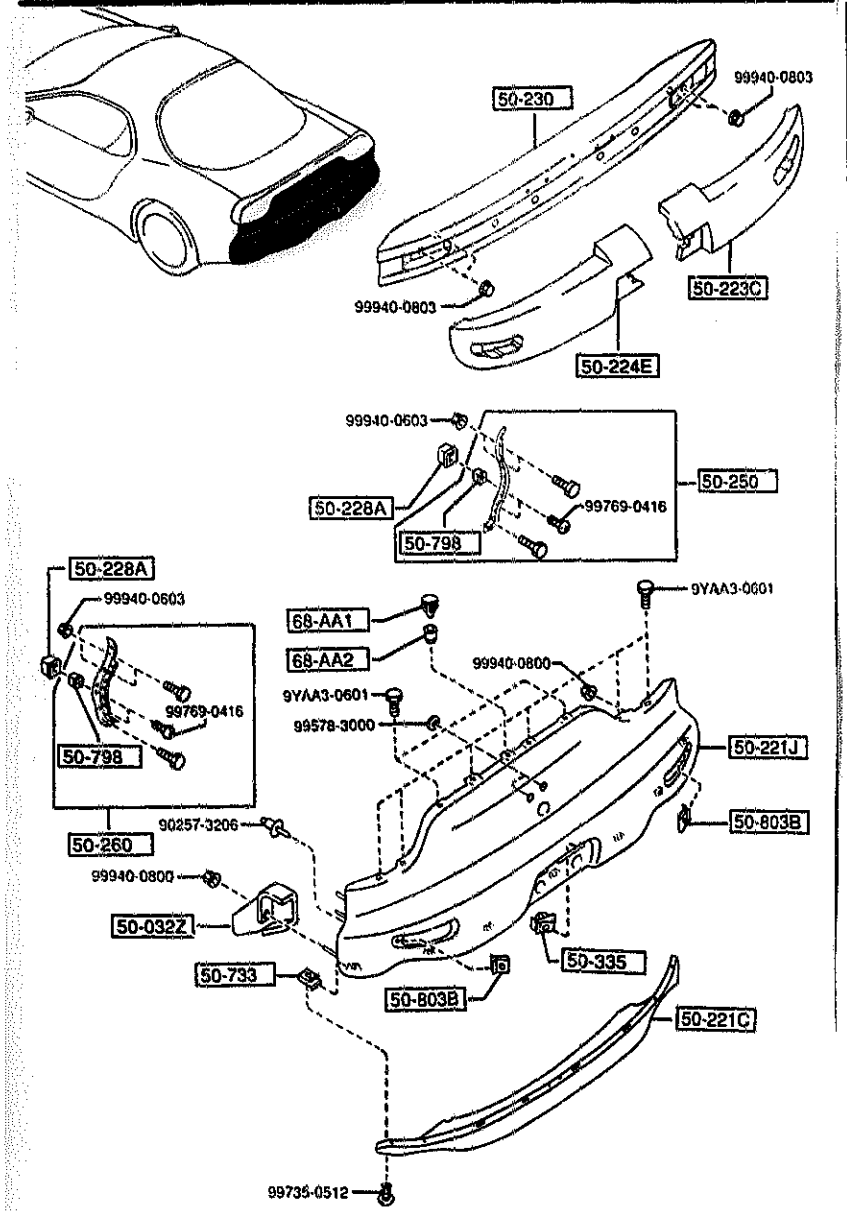

PART NO.	QTY	MODEL/RESTRICTION	MODEL/RESTRICTION	MODEL/RESTRICTION	FROM-TO
68-AA1		FASTENER			
LA10-68-AA1	1				
68-AA2		FASTENER,SEAL-TRIM			
LA10-68-AA2	1				

5030 WINDOW MOULDINGS

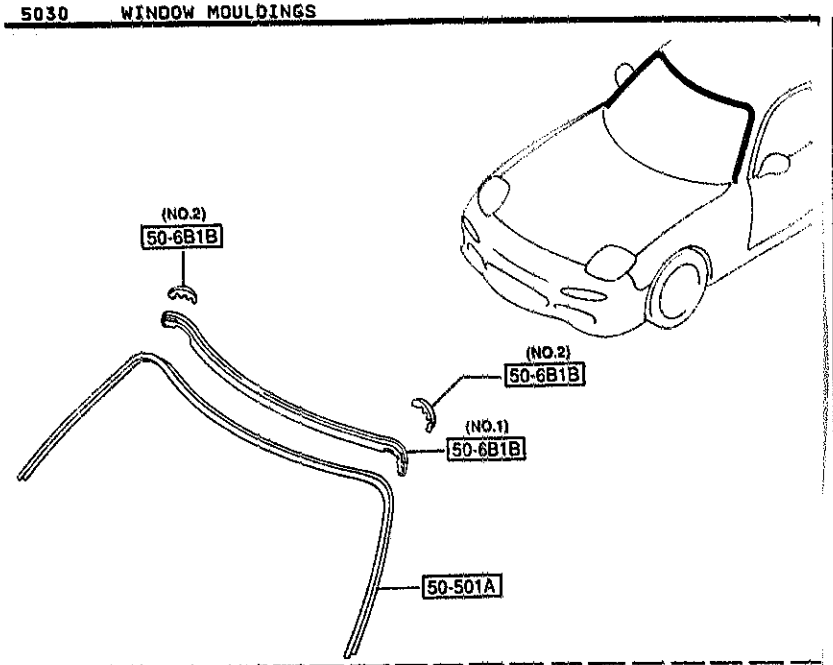

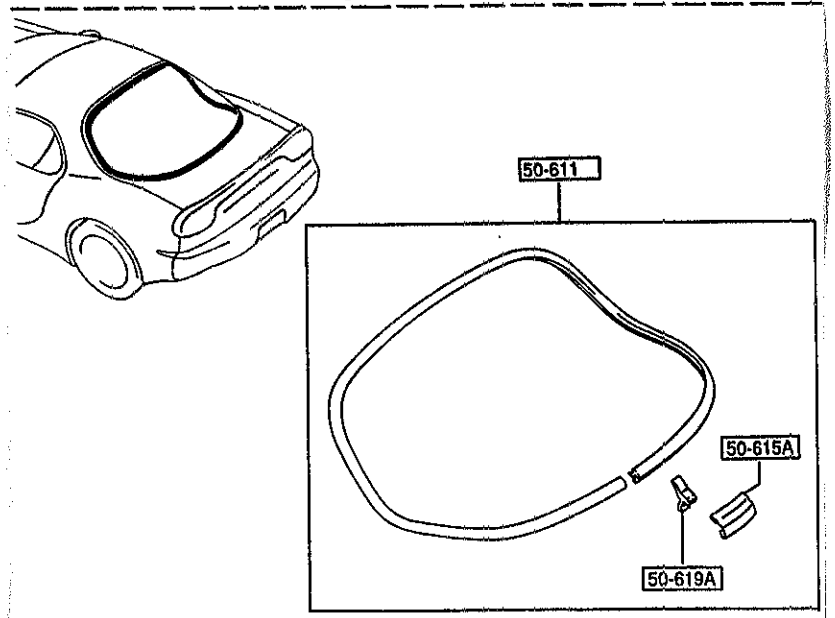

PART NO.	QTY	MODEL/RESTRICTION	MODEL/RESTRICTION	MODEL/RESTRICTION	FROM-TO
50-501A		MOULD(UP),FRT.WINDOW			
FD01-50-6AXB	1				
50-6B1B		PROTR,MOULD-FRT WINDOW			
NA01-50-6B1	1	(ILLUST. NO.1)			
NA01-50-6B2	2	(ILLUST. NO.2)			
50-611		MOULD,RR.WINDOW			
FD01-50-6G0B	1				
50-615A		JOINT,BACK WINDOW MOULD			
FD01-50-615	1				
50-619A		CLIP,RR.WINDOW MOULD			
FD01-50-619A	1				

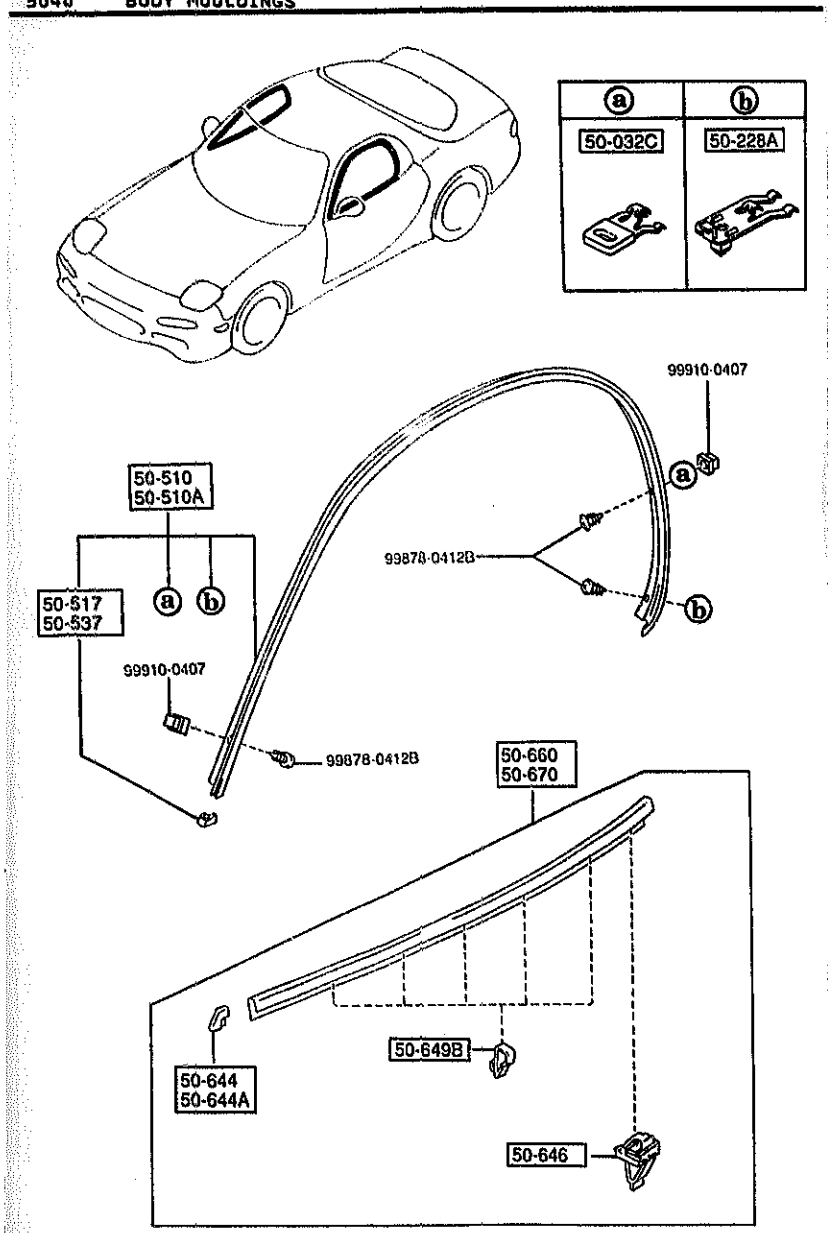

PART NO.	QTY	MODEL/RESTRICTION	MODEL/RESTRICTION	MODEL/RESTRICTION	FROM-TO
50-032C FD01-50-538A	2	GROMMET			
50-228A FD01-50-539A	2	GROMMET			
50-510 FD01-50-510E	1	MOULD(R),DRIP			
50-510A FD01-50-530E	1	MOULD(L),DRIP			
50-517 FD01-50-516A	1	PROTECTOR(R),DRIP ML DG			
50-537 FD01-50-536A	1	PROTECTOR(L),DRIP ML DG			
50-644 FD01-50-644A	1	PROTECTOR'A'(R),BELT LINE			
50-644A FD01-50-654A	1	PROTECTOR'A'(L),BELT LINE			
50-646 FD01-50-646B	2	CLIP,BELTLINE MOULD			
50-649B FD01-50-649A	10	CLIP'A',BELTLINE MOU LD			
50-660 FD01-50-640D	1	MOULD(R),BELTLINE			
50-670 FD01-50-650D	1	MOULD(L),BELTLINE			

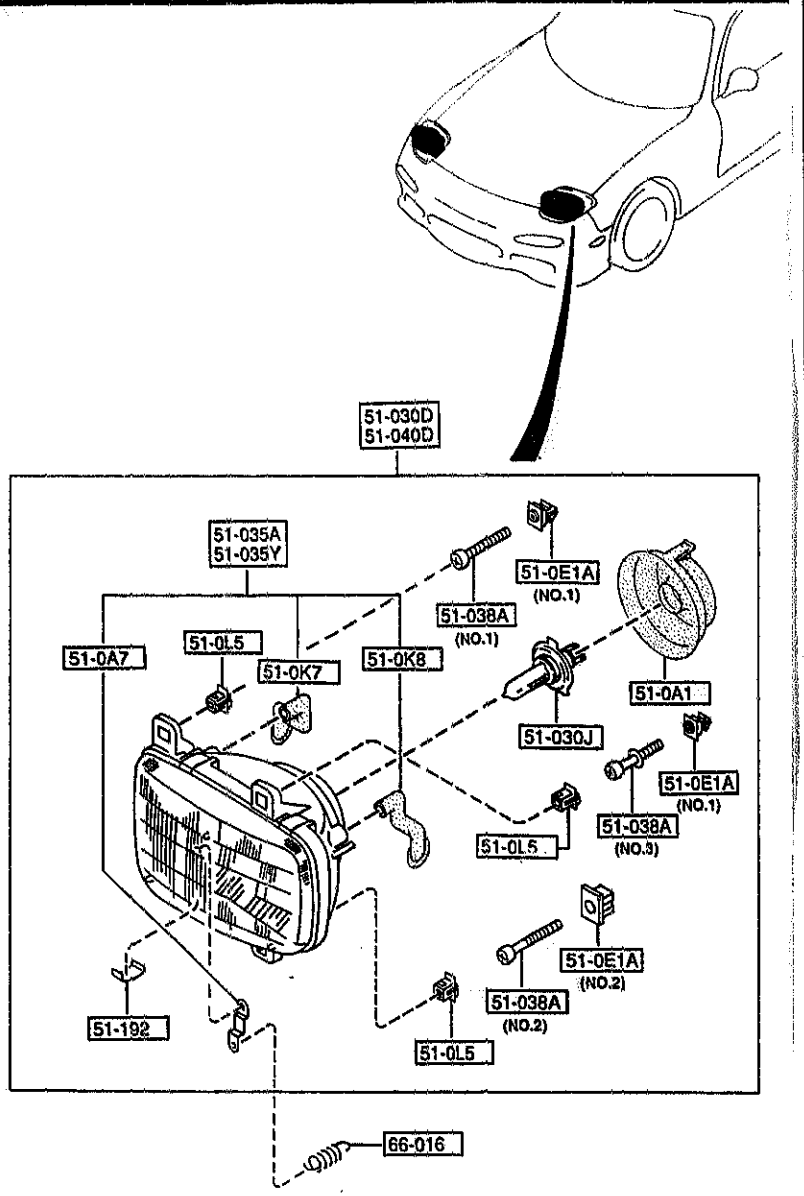

PART NO.	QTY	MODEL/RESTRICTION	MODEL/RESTRICTION	MODEL/RESTRICTION	FROM-TO
51-0A1		COVER,SOCKET-HEAD LAMP			
FD01-51-0A1	2				
51-0A7		BRACKET,HEAD LAMP			
FD01-51-0B7	2				
51-0E1A		FASTENER,LAMP			
BR70-51-0E1	4	(ILLUST. NO.1)			
FD01-51-025	2	(ILLUST. NO.2)			
51-0K7		TUBE,HEAD LAMP			
FD01-51-0K7	2				
51-0K8		TUBE,HEAD LAMP			
FD01-51-0K8	2				
51-0L5		BEARING,HEAD LAMP			
FD01-51-0L5	6				-4A01
BR70-51-0K3	6				4A01-
51-030D		LAMP(R),HEAD			
FD01-51-030D	1				
51-030J		BULB			
99703-8605	2	12V 60/55W			
51-035A		UNIT(R),HEAD LAMP			
FD01-51-0K0D	1				
51-035Y		UNIT(L),HEAD LAMP			
FD01-51-0L0D	1				
51-038A		SCREW,ADJUST			
FD01-51-037	2	(ILLUST. NO.1)			
FD01-51-047	2	(ILLUST. NO.3)			
FD02-51-037	2	(ILLUST. NO.2)			-4A01
BM89-51-037	2	(ILLUST. NO.2)			4A01-
51-040D		LAMP(L),HEAD			

4A01 FD333 -400014

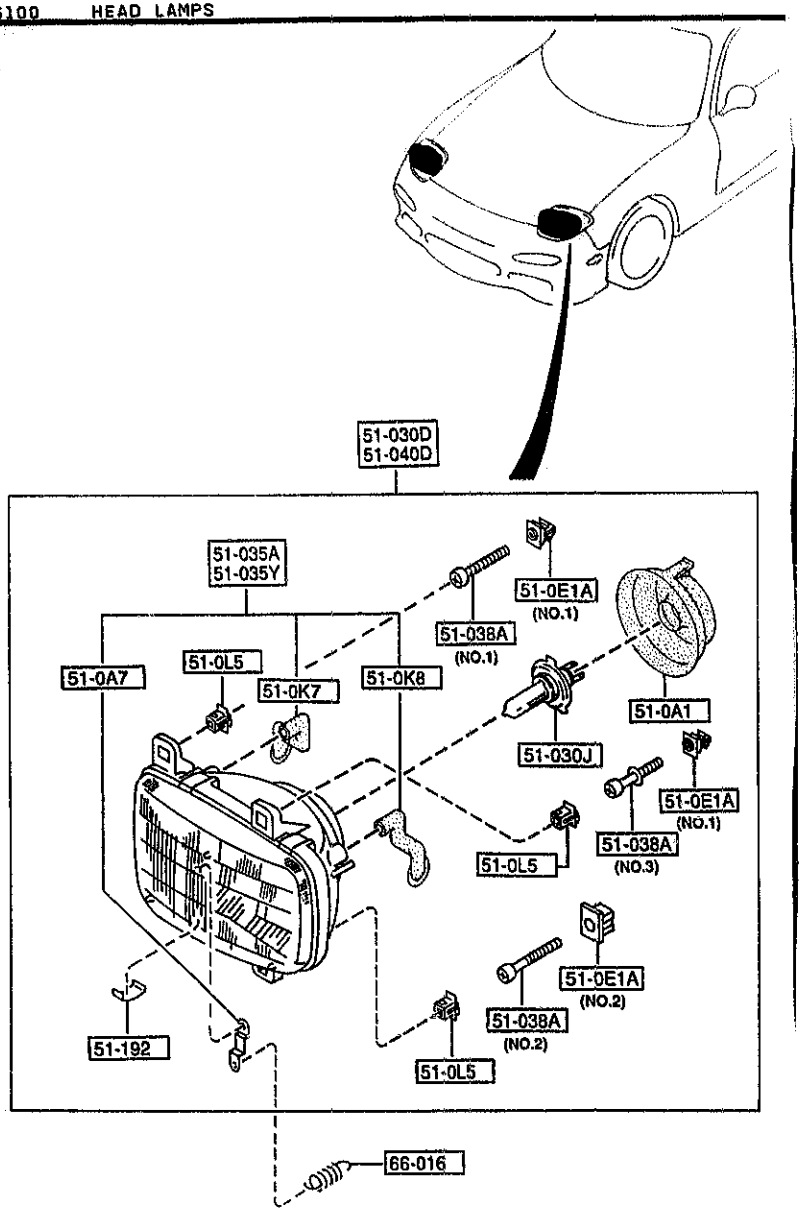

PART NO.	QTY	MODEL/RESTRICTION	MODEL/RESTRICTION	MODEL/RESTRICTION	FROM-TO
CONT'D					
FD01-51-040D	1				
+---------+					
| 51-192 |		CLIP			
+---------+					
B455-51-0A6	8				
+---------+					
| 66-016 |		SPRING,ADJUST			
+---------+					
FC42-51-036	2				

5103 HEAD LAMP RETRACTORS

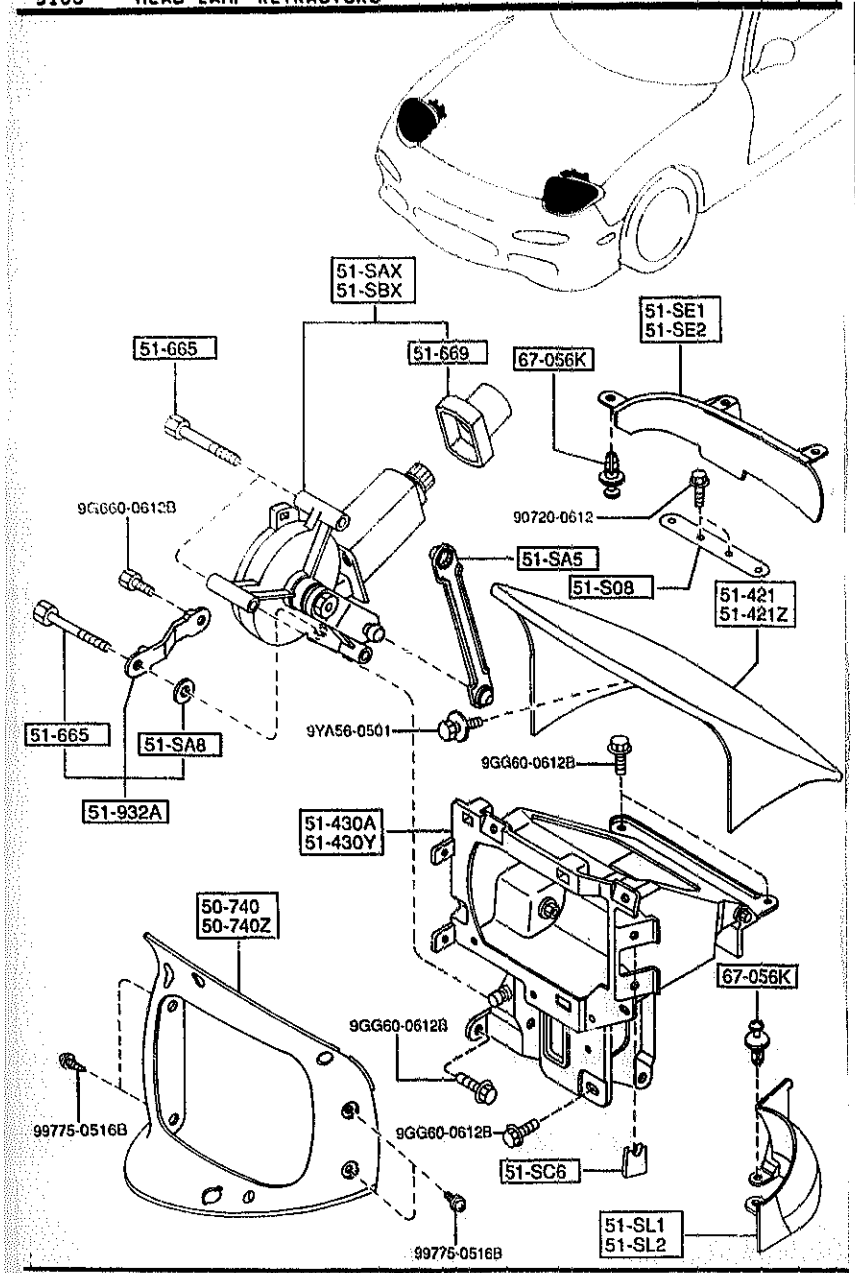

AUFA06

5103 -1 HEAD LAMP RETRACTORS

PART NO.	QTY	MODEL/RESTRICTION	MODEL/RESTRICTION	MODEL/RESTRICTION	FROM-TO
50-740		BEZEL(R),LAMP			
FD01-50-741C	1	(W/O HEAD LAMP CLEANER)			
50-740Z		BEZEL(L),LAMP			
FD01-50-751C	1	(W/O HEAD LAMP CLEANER)			
51-SAX		MOTOR(R),RETRACTABLE HEAD			
FD01-51-SAXB	1				
51-SA5		ROD,RETRACTABLE			
FD01-51-SA5	2				
51-SA8		WASHER			
NA01-51-SA8	2				
51-SBX		MOTOR(L),RETRACTABLE HEAD			
FD01-51-SBXB	1				
51-SC6		NUT,STOPPER-LAMP HINGE			
FD01-69-276A	6				
51-SE1		PROTECTOR(R),RETRA H/L			
FD01-51-SE1A	1				
51-SE2		PROTECTOR(L),RETRA. H/L			
FD01-51-SE2A	1				
51-SL1		PROTECTOR(R),FENDER			
FD01-51-SL1A	1				
51-SL2		PROTECTOR(L),FENDER			
FD01-51-SL2A	1				
51-S08		PLATE,RETRACTABLE			
FD01-51-S08A	2				
51-421		LID(R),LAMP			
FDY2-51-SH1	1				

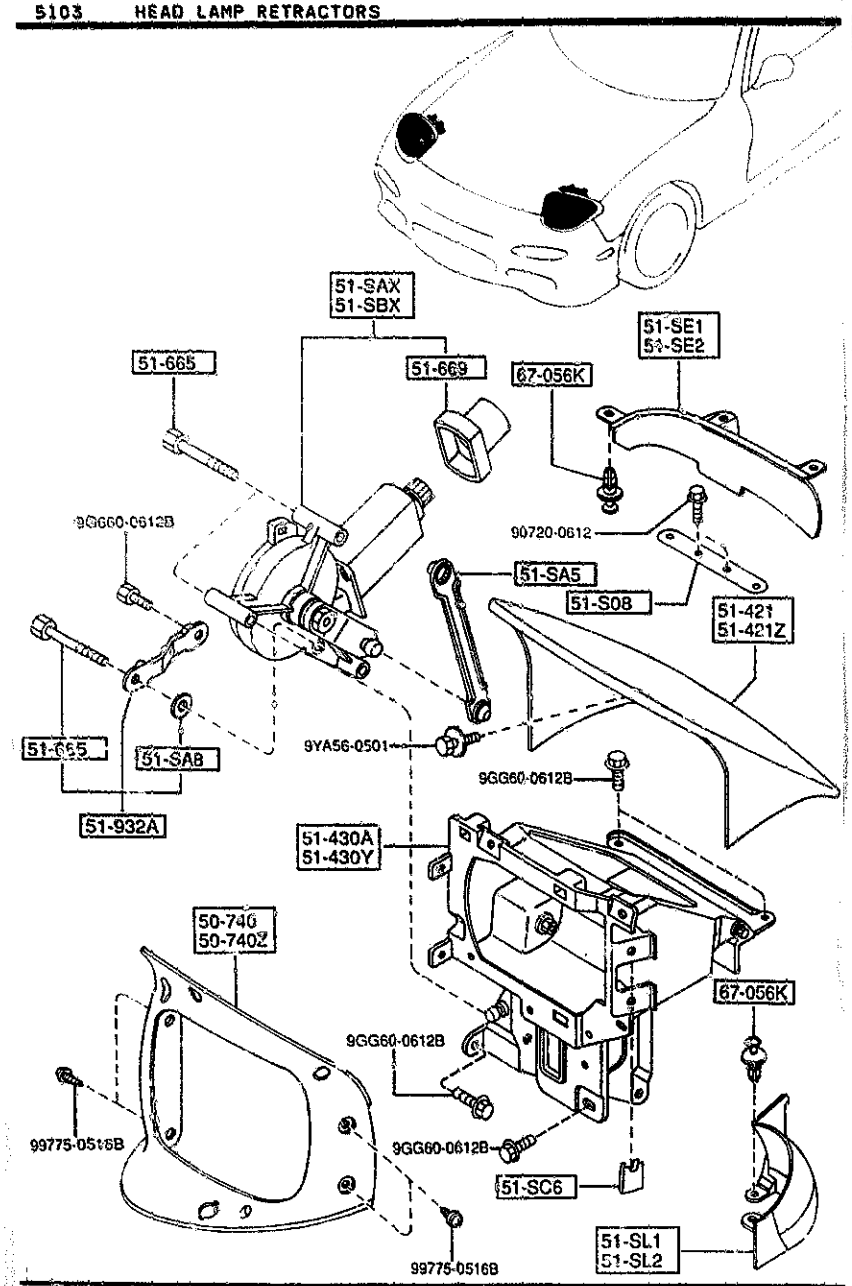

AUFA06

5103 -2 * HEAD LAMP RETRACTORS

PART NO.	QTY	MODEL/RESTRICTION	MODEL/RESTRICTION	MODEL/RESTRICTION	FROM-TO
51-421Z FDY2-51-SH2	1	LID(L),LAMP			
51-430A FD01-51-SC0D	1	HINGE(R),LID-LAMP			
51-430Y FD01-51-SD0D	1	HINGE(L),LID-LAMP			
51-665 FB01-51-665	6	BOLT,MOTOR-RETRACT H /LAMP			
51-669 NA01-51-669	2	BOOT,MOTOR-RETRACT H /L			
51-932A FD01-51-S1Y	2	BRACKET,MOTOR			
67-056K UB39-50-795	10	RIVET			

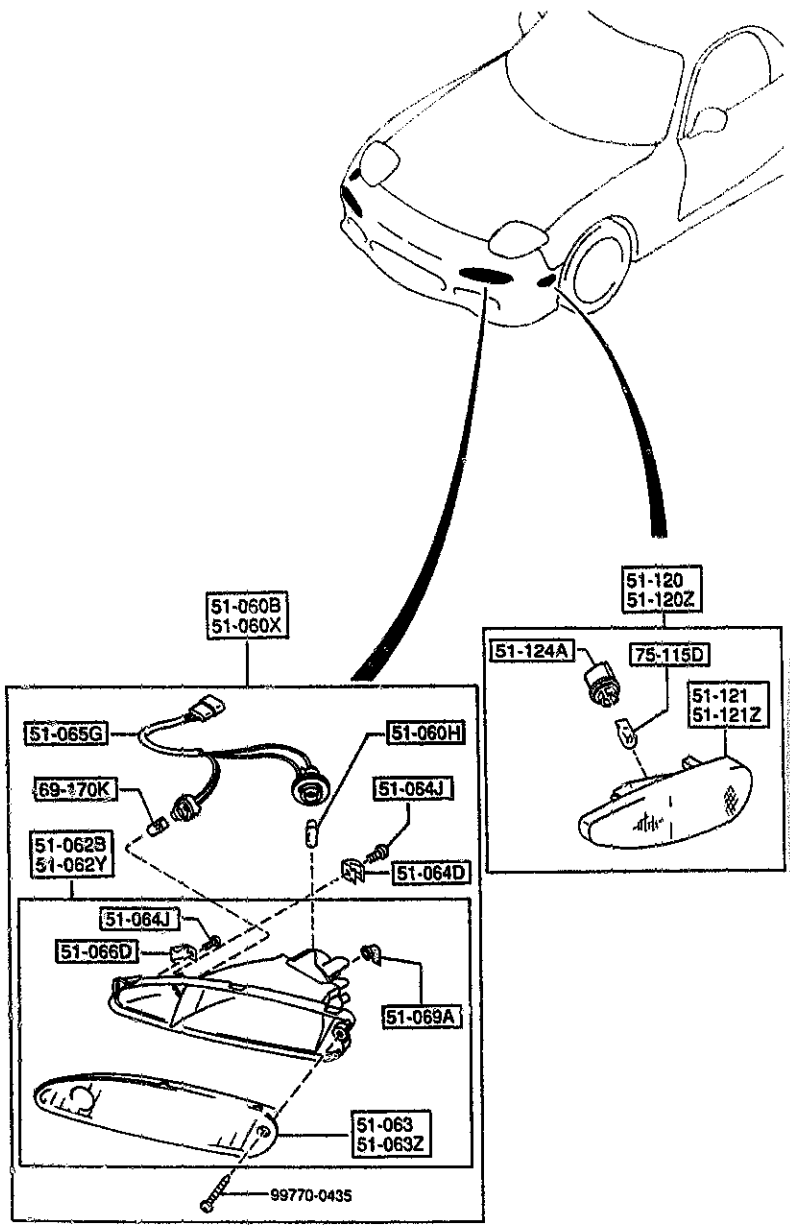

AUFA06

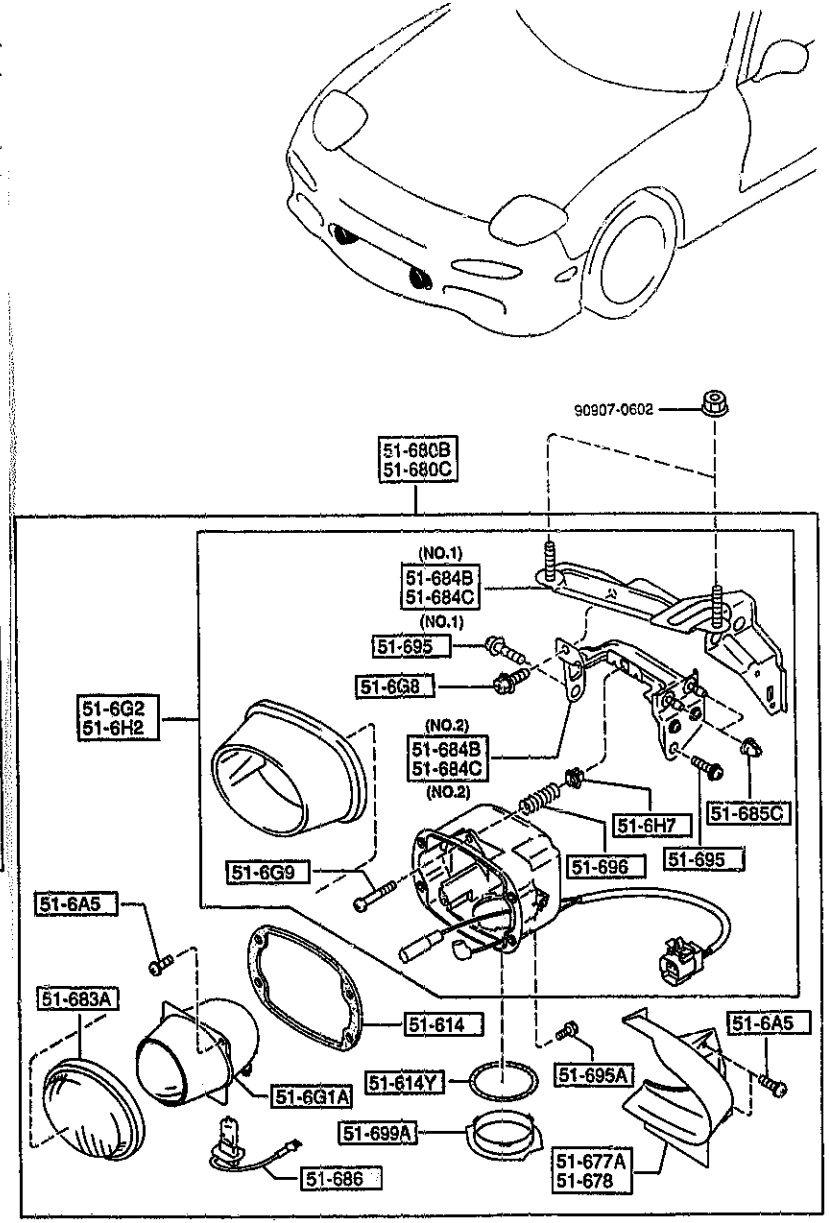

AUFA06

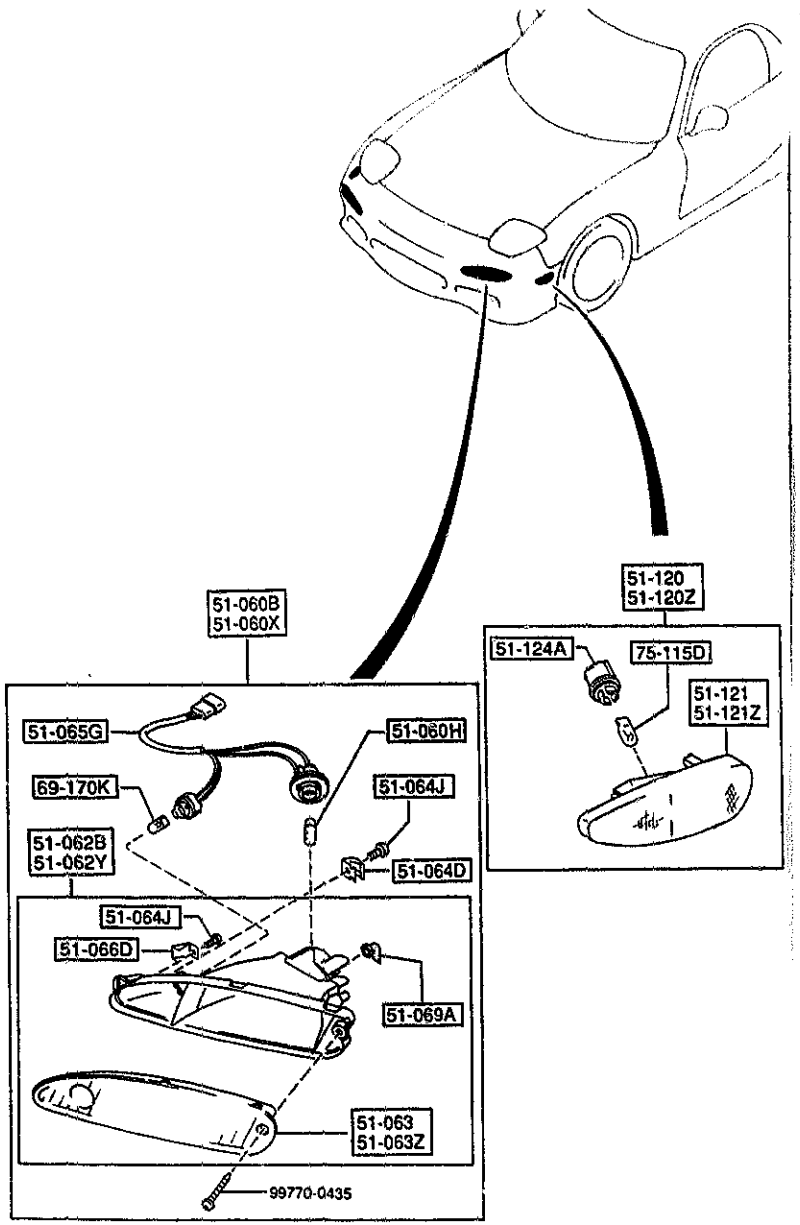

5105 -1 FRONT COMBINATION LAMPS

PART NO.	QTY	MODEL/RESTRICTION	MODEL/RESTRICTION	MODEL/RESTRICTION	FROM-TO
51-060B FD01-51-060D	1	LAMP(R),FRT. COMB.			
51-060H 90701-7270	2	BULB 12V/27W			
51-060X FD01-51-070D	1	LAMP(L),FRT. COMB.			
51-062B FD01-51-06XB	1	LENS & BODY(R),F. COMB.			
51-062Y FD01-51-07XB	1	LENS & BODY(L),F. COMB.			
51-063 FD01-51-061	1	LENS(R),FRT COMB.			
51-063Z FD01-51-071	1	LENS(L),FRT COMB.			
51-064D FD01-51-057	2	SPRING,FRT. COMB.			
51-064J FD01-51-1E6	4	SCREW,TAPPING			
51-065G FD01-51-064A	2	SOCKET,F. COMB. LAMP			
51-066D FD01-51-056	2	BRACKET,FRONT COMB. LAMP			
51-069A NA01-51-069	2	TUBE,HEAD LAMP			
51-120 FD01-51-5E0B	1	LAMP(R),SIDE TURN			
51-120Z		LAMP(L),SIDE TURN			

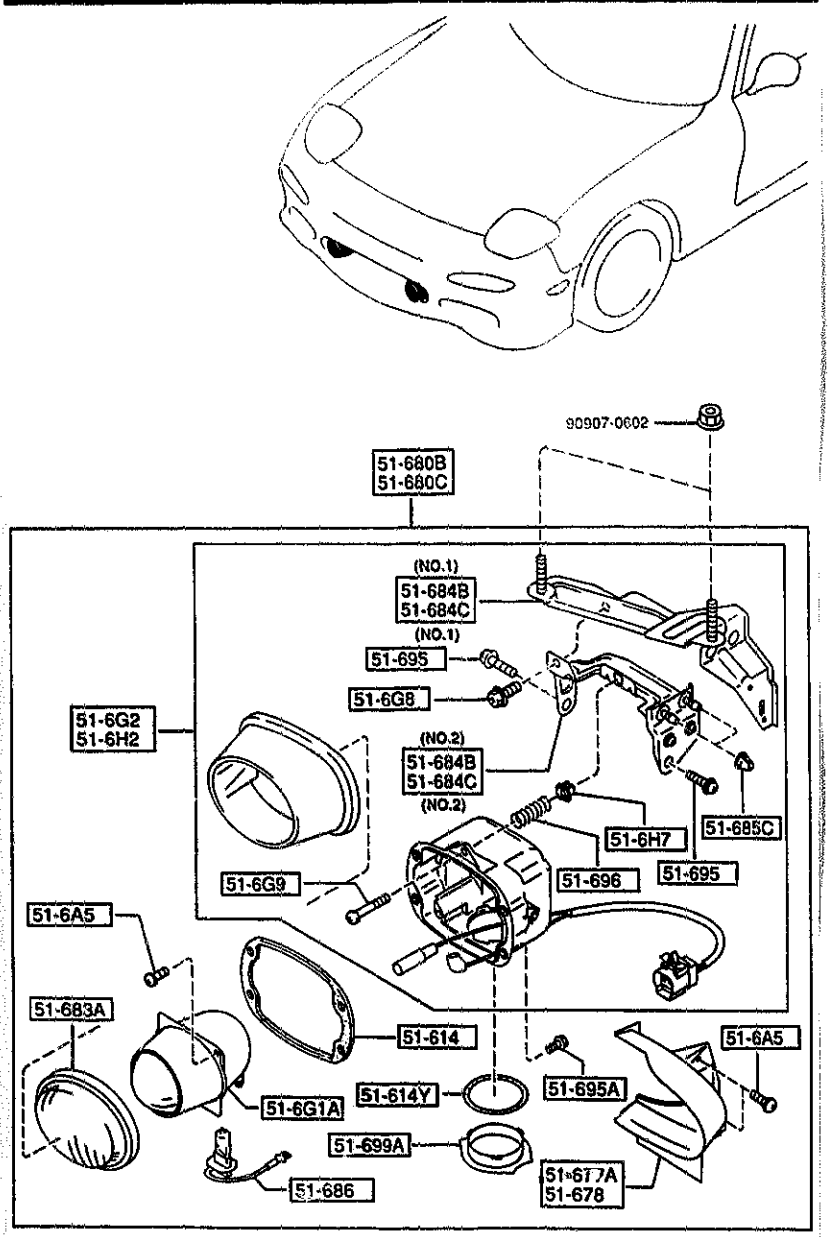

PART NO.	QTY	MODEL/RESTRICTION	MODEL/RESTRICTION	MODEL/RESTRICTION	FROM-TO
CONT'D					
FD01-51-5F0B	1				
51-121		LENS & BODY(R)			
FD01-51-5E1B	1				
51-121Z		LENS & BODY(L)			
FD01-51-5F1B	1				
51-124A		SOCKET,SIDE TURN			
H380-51-5E2	2				
51-6A5		SCREW,F. FOG LAMP			
FD01-51-6A5	8	(W/STEEL SUN ROOF) (W/GLASS SUN ROOF)			
51-6G1A		UNIT,FOG LAMP			
FD01-51-6G1A	2	(W/STEEL SUN ROOF) (W/GLASS SUN ROOF)			
51-6G2		HOUSING(R),FOG LAMP			
F100-51-68YA	1	(W/STEEL SUN ROOF) (W/GLASS SUN ROOF)			
51-6G8		BOLT,SPECIAL			
FD01-51-6G8	2	(W/STEEL SUN ROOF) (W/GLASS SUN ROOF)			
51-6G9		SCREW,ADJUST			
F100-51-6G9	2	(W/STEEL SUN ROOF) (W/GLASS SUN ROOF)			
51-6H2		HOUSING(L),FOG LAMP			
F100-51-69YB	1	(W/STEEL SUN ROOF) (W/GLASS SUN ROOF)			
51-6H7		SCREW,GROMMET			
FD01-51-6H7	2	(W/STEEL SUN ROOF) (W/GLASS SUN ROOF)			
51-614		GASKET			
FD01-51-682	2	(W/STEEL SUN ROOF) (W/GLASS SUN ROOF)			
51-614Y		GASKET(L)			

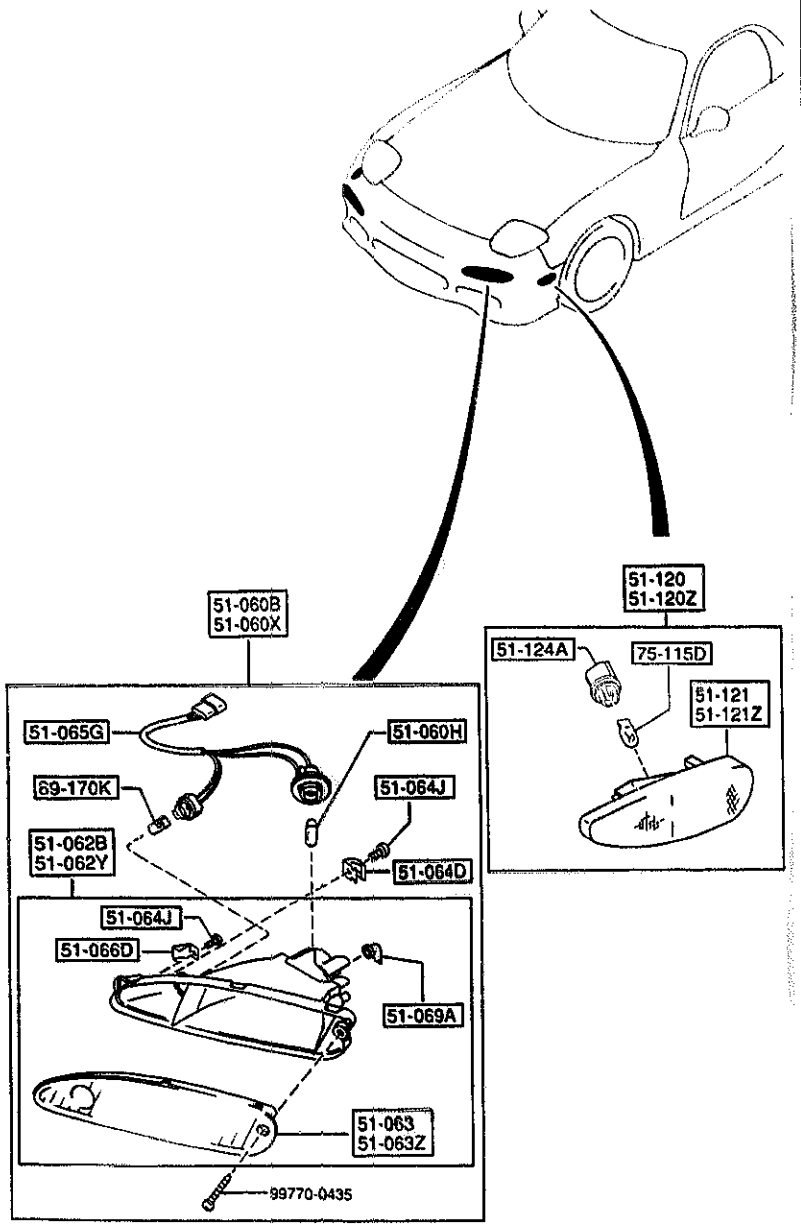

PART NO.	QTY	MODEL/RESTRICTION	MODEL/RESTRICTION	MODEL/RESTRICTION	FROM-TO
CONT'D					
FD01-51-692	2	(W/STEEL SUN ROOF) (W/GLASS SUN ROOF)			
51-677A		COVER(R),FOG LAMP			
FD01-51-677	1	(W/STEEL SUN ROOF) (W/GLASS SUN ROOF)			
51-678		COVER(L),FOG LAMP			
FD01-51-678	1	(W/STEEL SUN ROOF) (W/GLASS SUN ROOF)			
51-680B		LAMP(R),F.FOG			
F111-51-680	1	(W/STEEL SUN ROOF) (W/GLASS SUN ROOF)			
51-680C		LAMP(L),F.FOG			
F111-51-690	1	(W/STEEL SUN ROOF) (W/GLASS SUN ROOF)			
51-683A		LENS,FRONT FOG LAMP			
FD01-51-683	2	(W/STEEL SUN ROOF) (W/GLASS SUN ROOF)			
51-684B		BRACKET(R),F.FOG LAM P			
FD01-51-684A	1	(ILLUST. NO.1) (W/STEEL SUN ROOF) (W/GLASS SUN ROOF)			
FD02-51-684	1	(ILLUST. NO.2) (W/STEEL SUN ROOF) (W/GLASS SUN ROOF)			
51-684C		BRACKET(L),LAMP-F. F OG			
FD01-51-694A	1	(ILLUST. NO.1) (W/STEEL SUN ROOF) (W/GLASS SUN ROOF)			
FD02-51-694	1	(ILLUST. NO.2) (W/STEEL SUN ROOF) (W/GLASS SUN ROOF)			
51-685C		CLIP			
FD01-51-674	4	(W/STEEL SUN ROOF) (W/GLASS SUN ROOF)			
51-686		BULB,FRONT FOG LAMP			
B01A-51-686	2	(W/STEEL SUN ROOF) (W/GLASS SUN ROOF)			

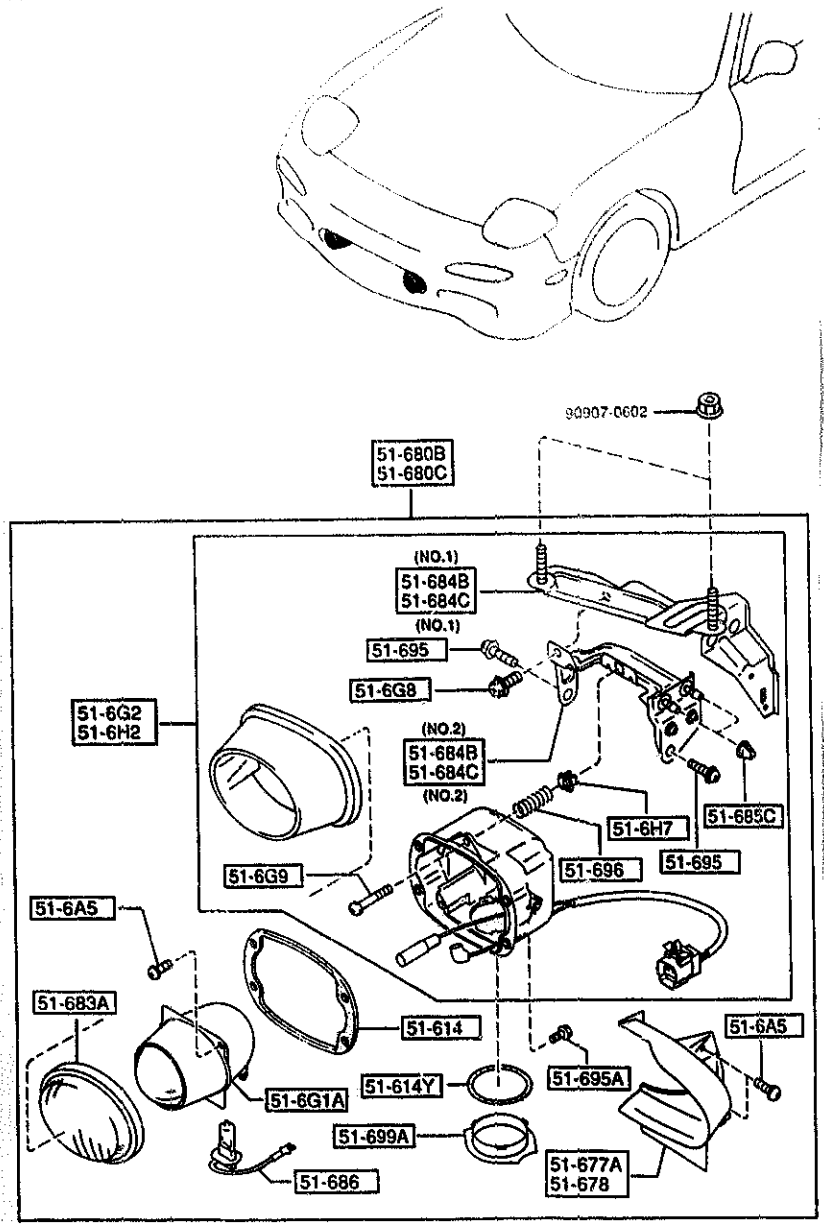

5105 -4 * FRONT COMBINATION LAMPS

PART NO.	QTY	MODEL/RESTRICTION	MODEL/RESTRICTION	MODEL/RESTRICTION	FROM-TO
51-695		SCREW,FRONT FOG LAMP			
FD01-51-695	4	(W/STEEL SUN ROOF) (W/GLASS SUN ROOF)			
51-695A		SCREW,LAMP			
FD01-51-671	8	(W/STEEL SUN ROOF) (W/GLASS SUN ROOF)			
51-696		SPRING,FRONT FOG LAMP			
FD01-51-696	2	(W/STEEL SUN ROOF) (W/GLASS SUN ROOF)			
51-699A		COVER,F.FOG LAMP			
FD01-51-676	2	(W/STEEL SUN ROOF) (W/GLASS SUN ROOF)			
69-170K		BULB,INTERIOR MIRROR			
99701-6050	2	12V 5W			
75-115D		BULB			
99701-6049	2	12V 3CP			

5110 REAR COMBINATION LAMPS

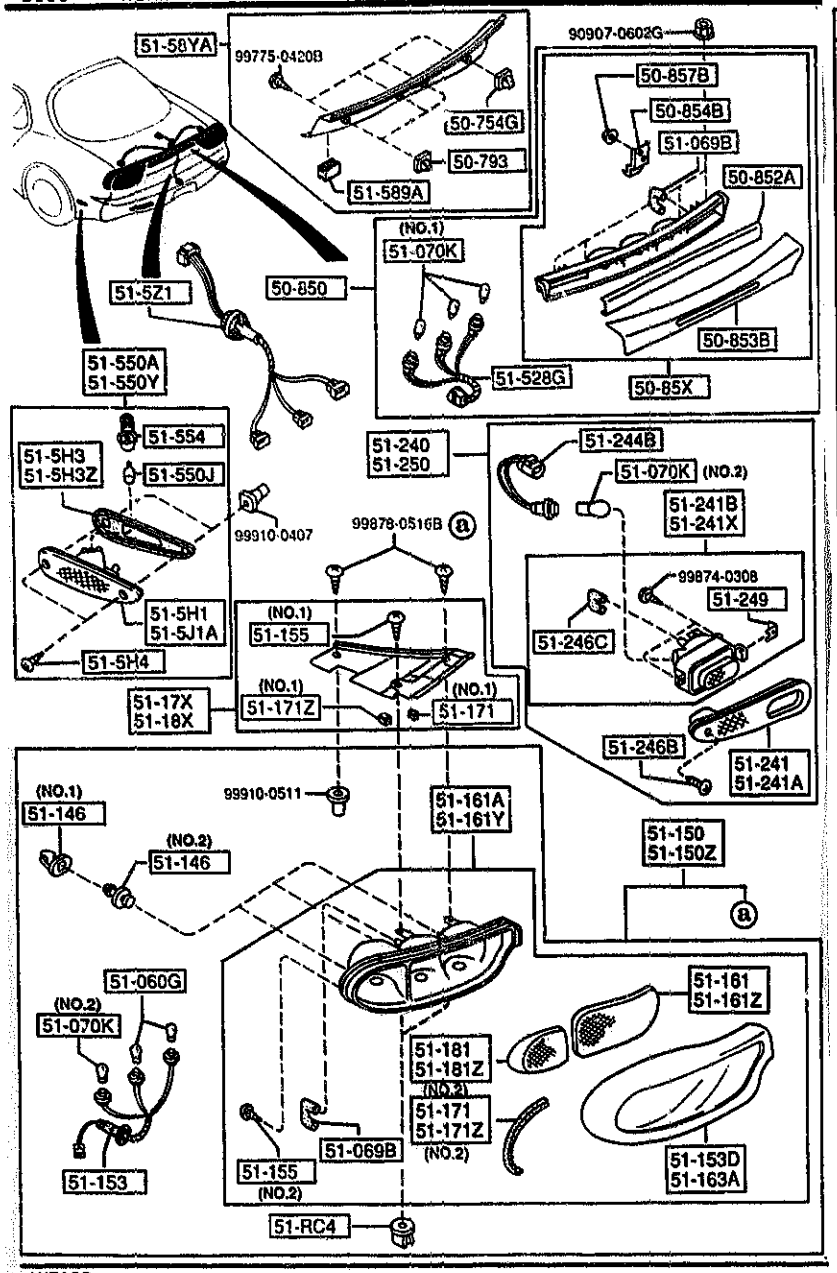

AUFA06

5110 -1 REAR COMBINATION LAMPS

PART NO.	QTY	MODEL/RESTRICTION	MODEL/RESTRICTION	MODEL/RESTRICTION	FROM-TO
50-754G FD03-50-792	1	GROMMET,SCREW			
50-793 FD02-50-792	3	GROMMET,SCREW			
50-85X FD01-51-59XA A (FD01-51-59XB)	1	LENS & BODY,REAR FINISHER			-5C26
*FD01-51-59XB	1				5C26-
50-850 FD01-50-850C A (FD01-50-850D)	1	FINISHER,REAR			-5C26
*FD01-50-850D	1				5C26-
50-852A FD01-51-577	1	LENS,REAR FINISHER			-5C26
50-853B FD01-51-591 A (FD01-51-591A)	1	LENS,REAR FINISHER			-5C26
*FD01-51-591A	1				5C26-
50-854B FD01-51-585	4	BRACKET,REAR FINISHER			
50-857B FD01-51-594	8	NUT,SPEED-REAR FINISHER			
51-RC4 FD01-51-RC4	4	GROMMET,SIDE GARNISH			
51-060G 99701-4278	4	BULB 12V 27W/8W			
51-069B B481-51-069	3	TUBE,LAMP-FRONT COMB.			
51-070K 99700-7180		BULB A12V 18.4W			

5C26 FD333 -400531

5110 REAR COMBINATION LAMPS

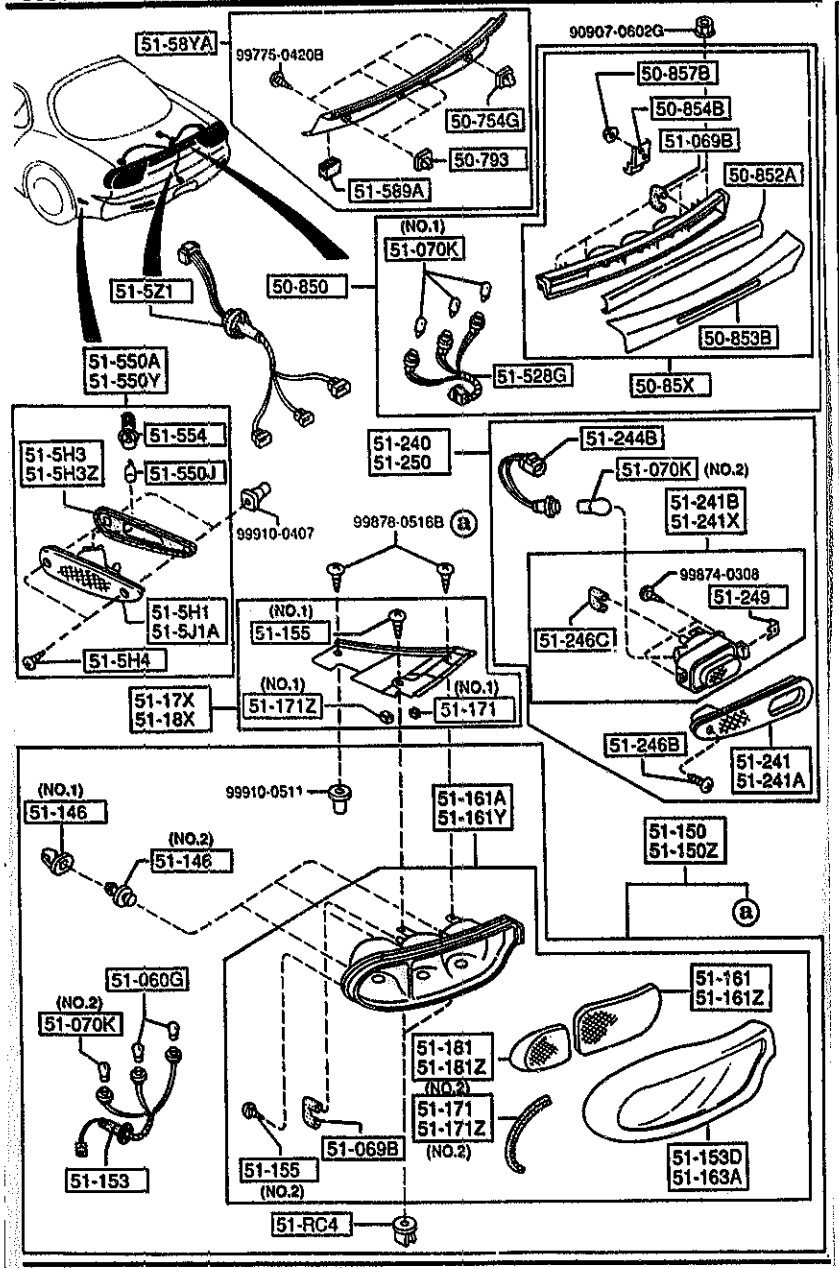

AUFA06

5110 -2 REAR COMBINATION LAMPS

PART NO.	QTY	MODEL/RESTRICTION	MODEL/RESTRICTION	MODEL/RESTRICTION	FROM-TO
CONT'D					
	3	(ILLUST. NO.1)			
99701-3270	4	12V 27W (ILLUST. NO.2)			
51-146		GROMMET,SCREW-R.COMB			
EA02-51-146A	6	(ILLUST. NO.1)			
EA04-51-146A	6	(ILLUST. NO.2)			
51-150		LAMP SET(R),RR.COMB.			
8BFH-51-150	1				
51-150Z		LAMP SET(L),RR.COMB.			
8BFH-51-160	1				
51-153		SOCKET,RR.COMB.			
FD01-51-155B	2				
51-153D		LENS NO.3(R),RR COMB .LAMP			
FD01-51-153B	1				
51-155		SCREW,RR.COMB.			
FD01-51-143	2	(ILLUST. NO.1)			
FD01-51-144	12	(ILLUST. NO.2)			
51-161		LENS(R),RR.COMB.			
FD01-51-151	1				
51-161A		LENS & BODY(R),RR CO MB.			
FD01-51-170B	1				
51-161Y		LENS & BODY(L),RR CO MB.			
FD01-51-180B	1				
51-161Z		LENS(L),RR.COMB.			
FD01-51-161	1				
51-163A		LENS NO.3(L),RR COMB .LAMP			
FD01-51-163B	1				
51-17X		COVER(R),RR COMB.			
FD01-51-17XE	1				

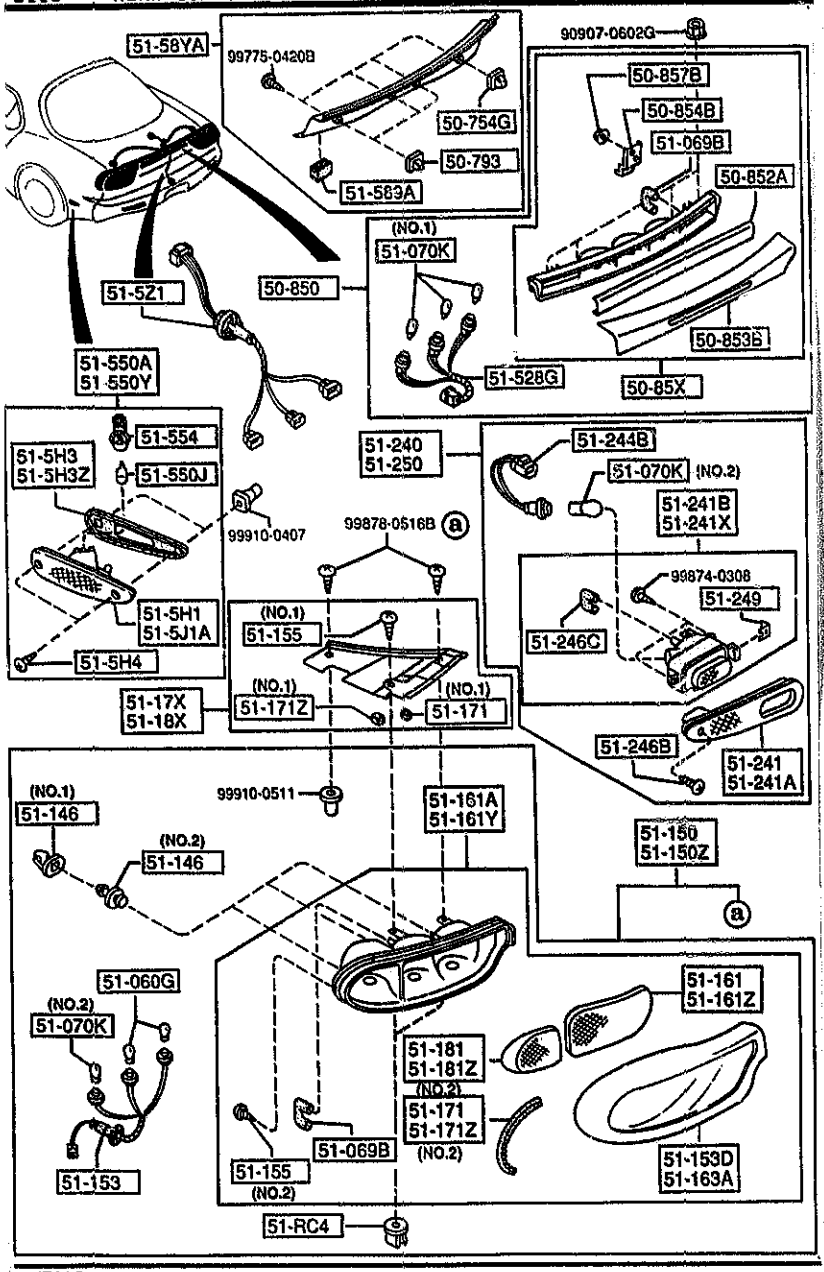

AUFA06

5110 -3 REAR COMBINATION LAMPS

PART NO.	QTY	MODEL/RESTRICTION	MODEL/RESTRICTION	MODEL/RESTRICTION	FROM-TO
51-171		PROTECTOR(R),RR.COMB			
FD01-51-173	1	(ILLUST. NO.2)			
FD02-51-159	2	(ILLUST. NO.1)			-4A03
51-171Z		PROTECTOR(L),RR.COMB			
FD02-51-169	4	(ILLUST. NO.1)			
FD01-51-183	1	(ILLUST. NO.2)			
51-18X		COVER(L),RR COMB.			
FD01-51-18XE	1				
51-181		LENS NO.2(R),RR.COMB			
FD01-51-152	1				
51-181Z		LENS NO.2(L),RR.COMB			
FD01-51-162	1				
51-240		LAMP(R),BACK UP			
FD01-51-240B	1				
51-241		HOUSING(R),BACK UP L AMP			
FD01-51-241B	1				
51-241A		HOUSING(L),BACK UP L AMP			
FD01-51-251B	1				
51-241B		LENS & BODY(R),BACK UP			
FD01-51-24XA	1				
51-241X		LENS & BODY(L),BACK UP			
FD01-51-25XA	1				
51-244B		SOCKET,BACK UP LAMP			
FD01-51-244	2				
51-246B		SCREW,BACK LAMP			
FD01-51-248	2				
51-246C		TUBE,BACK UP LAMP			
FD01-51-246	2				

4A03 FD333 -400014

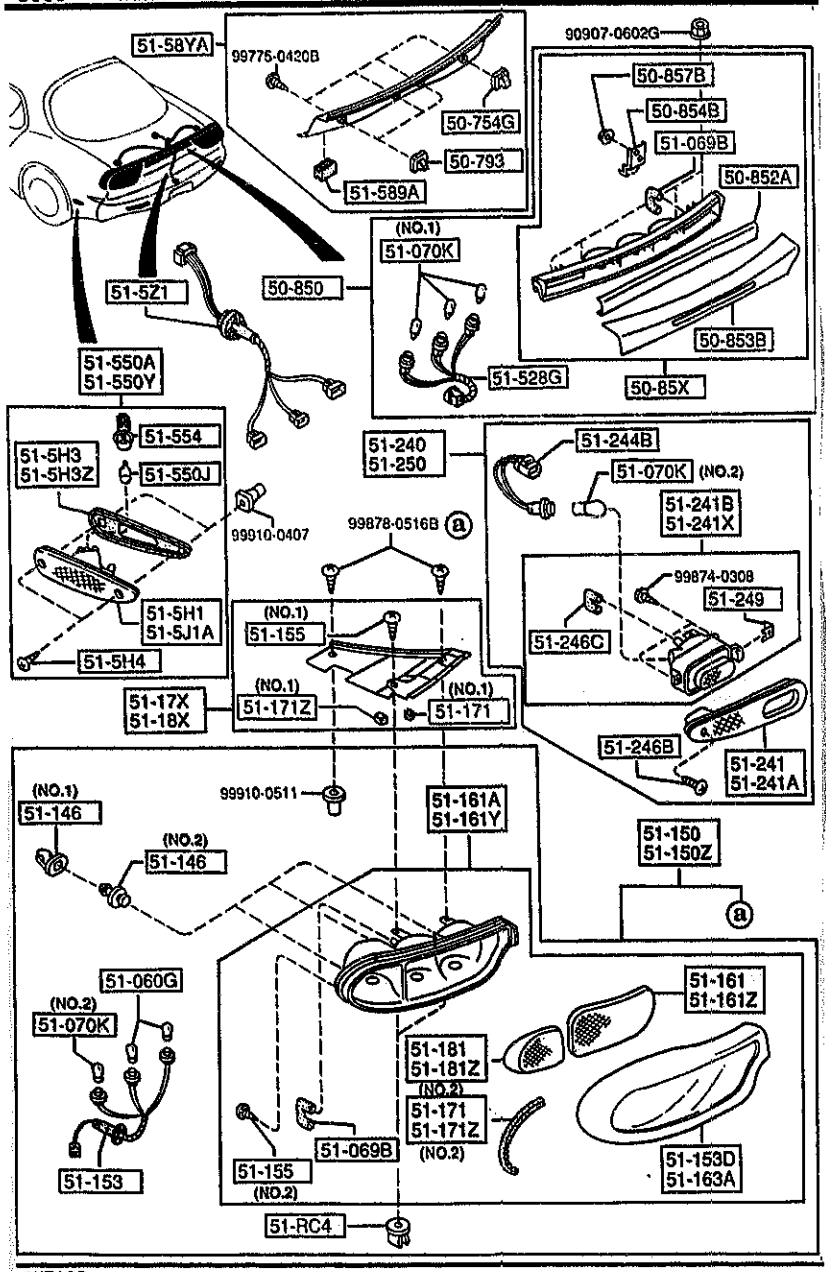

AUFA06

5110 -4 REAR COMBINATION LAMPS

PART NO.	QTY	MODEL/RESTRICTION	MODEL/RESTRICTION	MODEL/RESTRICTION	FROM-TO
51-249 FD01-51-249	2	SPRING,BACK UP LAMP			
51-250 FD01-51-250B	1	LAMP(L),BACK UP			
51-5H1 FD01-51-5H1C	1	LENS & BODY(R),RR SI DE TURN			
51-5H3 FD01-51-5H3	1	GASKET(R),REAR SIDE			
51-5H3Z FD01-51-5J3	1	GASKET(L),REAR SIDE			
51-5H4 FD01-51-5H4	4	SCREW,REAR SIDE			
51-5J1A FD01-51-5J1C	1	LENS & BODY(L),RR SI DE TURN			
51-5Z1 FD01-51-5Z1B	1	CORD,LAMP			
51-528G FD01-51-584A	1	SOCKET			
51-550A FD01-51-5H0D	1	LAMP(R),SIDE TURN-RR			
51-550J 99701-6040	2	BULB 12V 3.8W			
51-550Y FD01-51-5J0D	1	LAMP(L),SIDE TURN-RR			
51-554 FD01-51-5H2	2	SOCKET,RR SIDE TURN LAMP			
51-58YA		COVER,RR FINISHER			

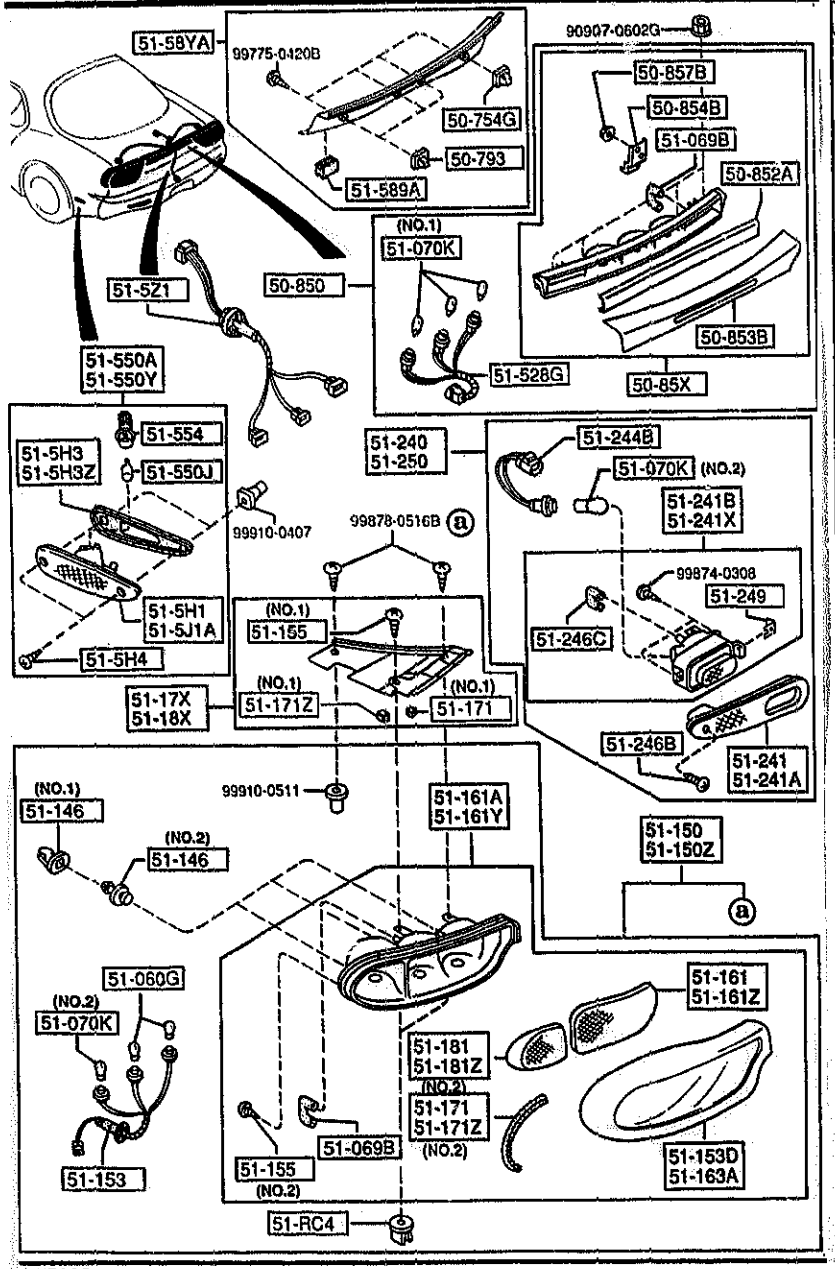

5110 -5 * REAR COMBINATION LAMPS

PART NO.	QTY	MODEL/RESTRICTION	MODEL/RESTRICTION	MODEL/RESTRICTION	FROM-TO
CONT'D					
FD01-51-58VC	1				
+----------+					
| 51-589A |		PROTECTOR,COVER			
+----------+					
FD01-51-589	4				

5120 LICENSE LAMPS

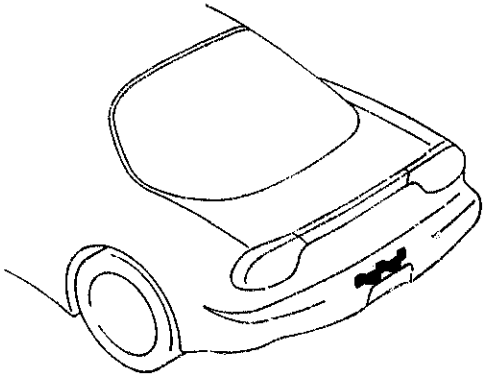

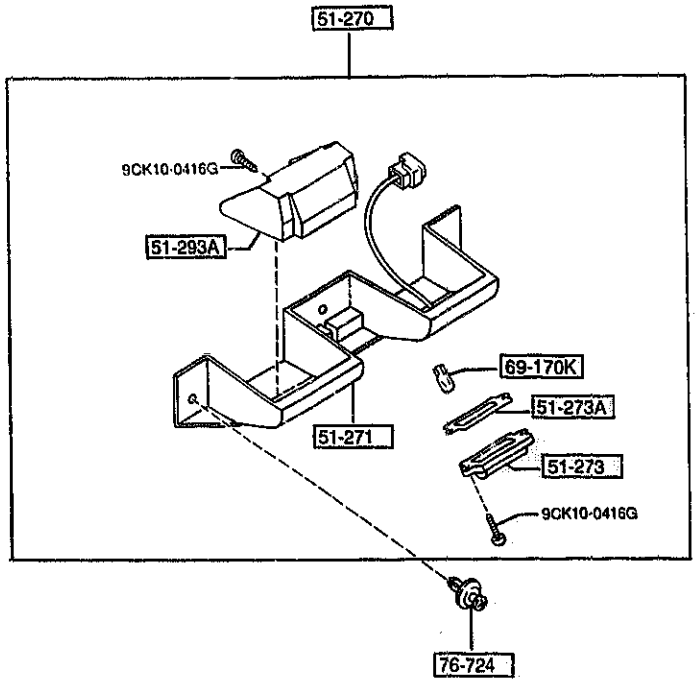

5120 -1 * LICENSE LAMPS

PART NO.	QTY	MODEL/RESTRICTION	MODEL/RESTRICTION	MODEL/RESTRICTION	FROM-TO
51-270		LAMP,LICENSE			
FD01-51-270C	1				
51-271		BRACKET,LICENCE LAMP			
FD01-51-261A	1				
51-273		LENS,LICENCE LAMP			
G225-51-274B	2				
51-273A		GASKET,LICENSE			
G225-51-273	2				
51-293A		COVER,LICENSE LAMP			
FD01-51-293	2				
69-170K		BULB,INTERIOR MIRROR			
99701-6050	2	12V 5W			
76-724		RIVET			
B092-51-833	3				

5125 INTERIOR LAMPS

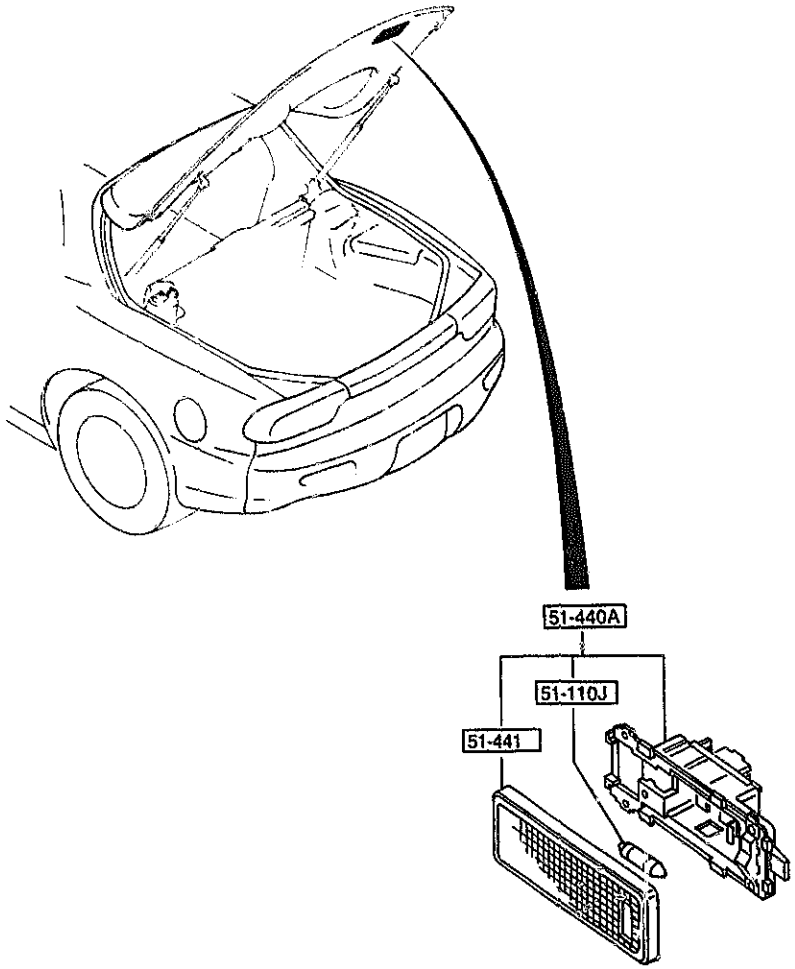

PART NO.	QTY	MODEL/RESTRICTION	MODEL/RESTRICTION	MODEL/RESTRICTION	FROM-TO
51-110J		BULB			
99700-5080	1	12V/8W			
51-440A		LAMP,CARGO ROOM			
LA01-51-440	1				
51-441		LENS			
G225-51-441	1				

5130 OVERHEAD CONSOLE

(STEEL SUN-RF)
(GLASS SUN-RF)

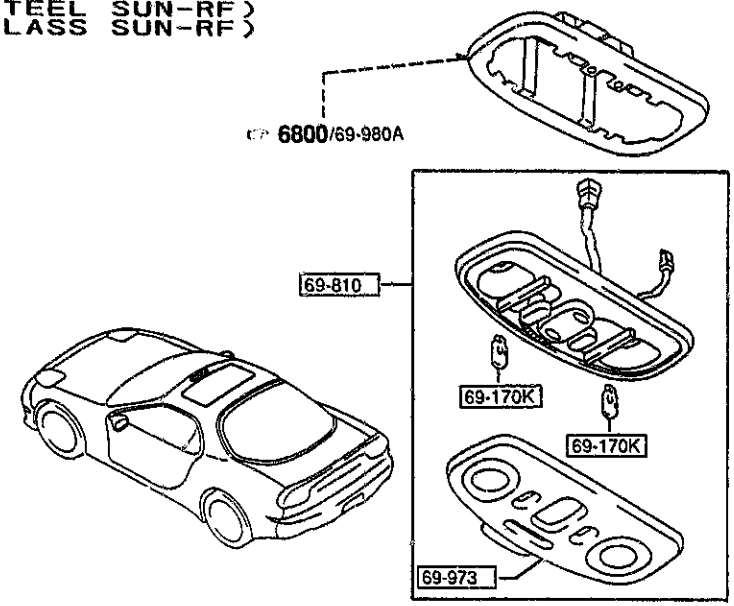

(W/O SUN-RF)

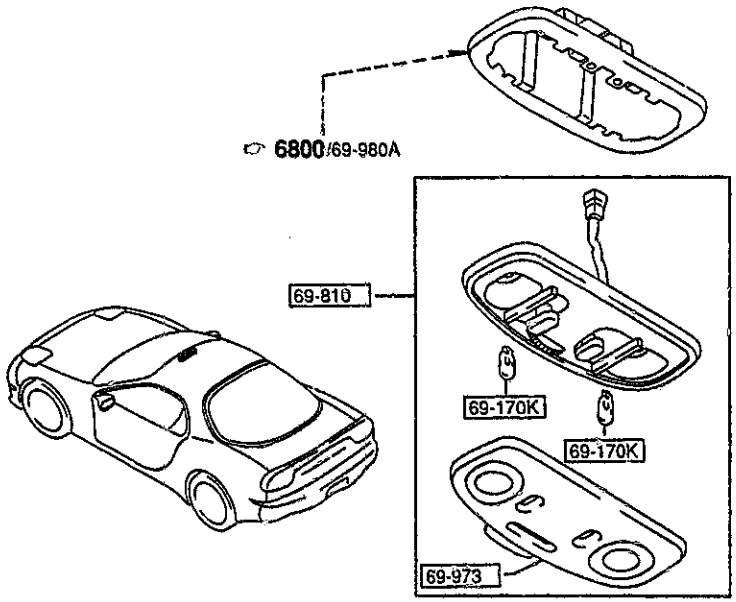

AUFA06

5130 -1 * OVERHEAD CONSOLE

PART NO.	QTY	MODEL/RESTRICTION	MODEL/RESTRICTION	MODEL/RESTRICTION	FROM-TO
+---------+					
| 69-170K |		BULB,INTERIOR MIRROR			
+---------+					
99701-6050	2	12V 5W			
+---------+					
| 69-810 |		CONSOLE,OVERHEAD			
+---------+					
FD01-69-970D	1	(W/STEEL SUN ROOF) (W/GLASS SUN ROOF)			
02	INT-	FE5 FE6 FE7 BLACK			
FD03-69-970D	1	(W/O SUN ROOF)			-5515
02	INT-	FE5 FE6 FE7 BLACK			
FD03-69-970E	1	(W/O SUN ROOF)			5515-
02	INT-	FE5 FE6 FE7 BLACK			
+---------+					
| 69-973 |		LENS,OVERHEAD CONSOLE			
+---------+					
EA01-69-973	1	(W/O SUN ROOF)			
EA05-69-973	1	(W/STEEL SUN ROOF) (W/GLASS SUN ROOF)			

5515 FD333 -400229

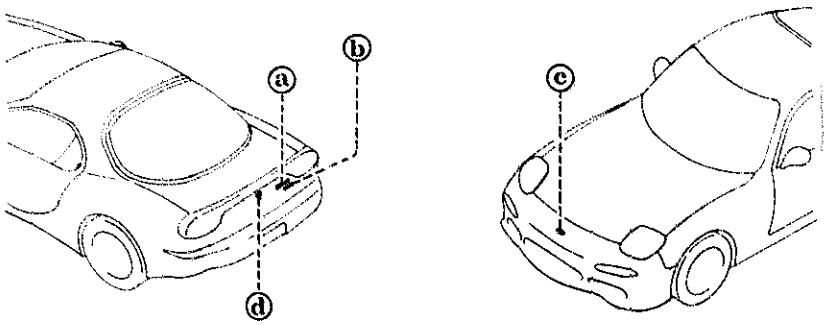

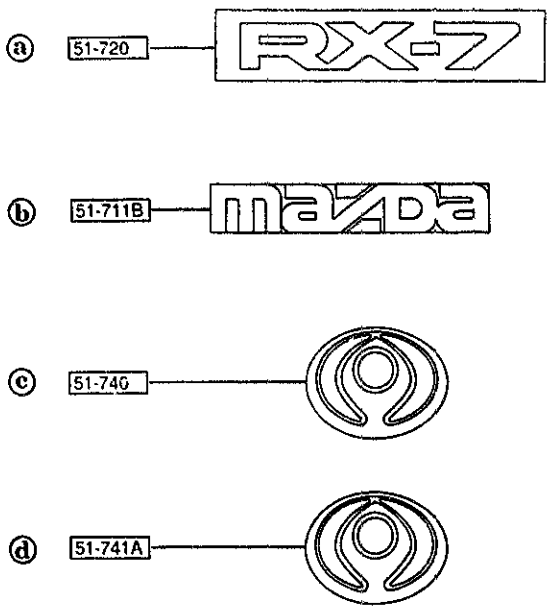

PART NO.	QTY	MODEL/RESTRICTION	MODEL/RESTRICTION	MODEL/RESTRICTION	FROM-TO
51-711B FD01-51-711A	1	ORNAMENT,MAKER NAME-REAR			
51-720 FD01-51-721C	1	ORNAMENT,CAR NAME-REAR			
51-740 FD02-51-731	1	MASCOT,FRONT			
51-741A FD02-51-741A	1	MASCOT,REAR			

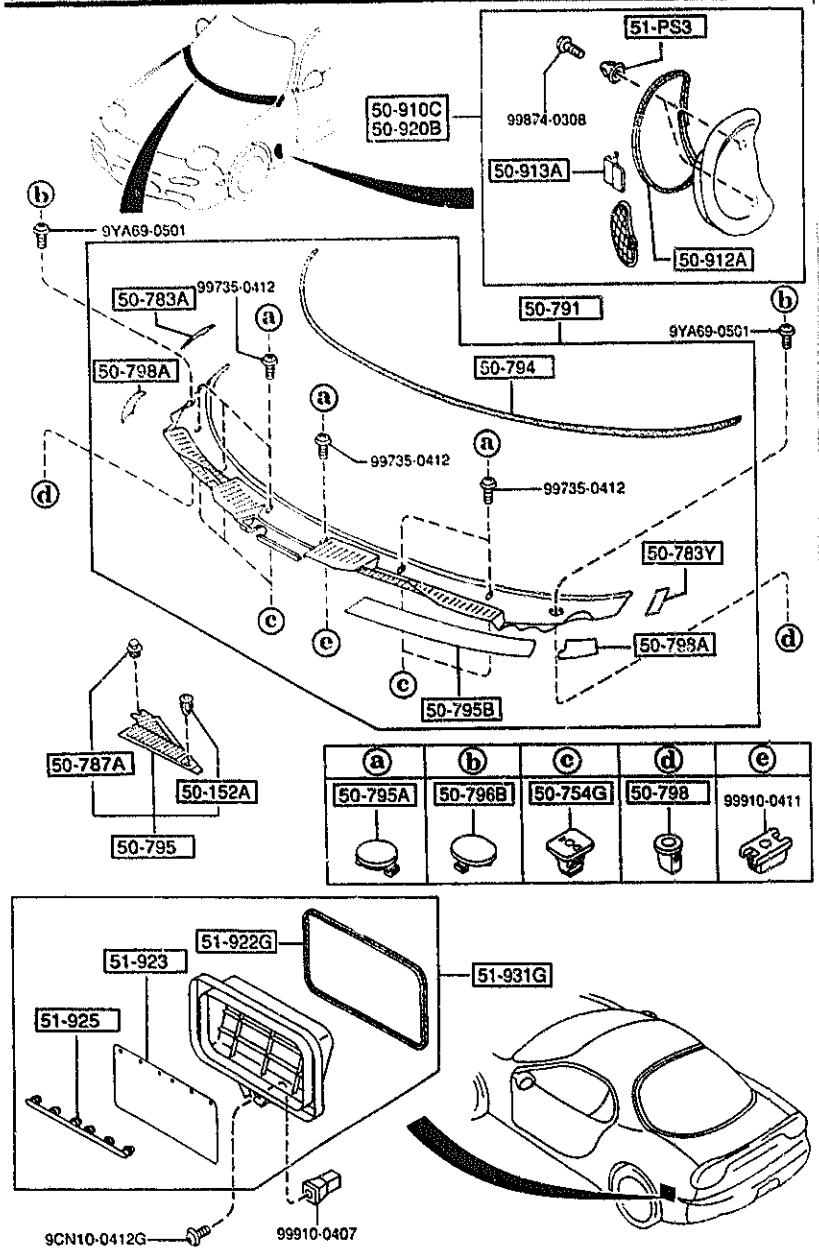

5180 -1 COWL & EXTRACTOR GRILLES

PART NO.	QTY	MODEL/RESTRICTION	MODEL/RESTRICTION	MODEL/RESTRICTION	FROM-TO
50-152A 3597-50-152	1	CLIP			
50-754G B462-50-792	5	GROMMET,SCREW			
50-783A FD01-50-783	1	PROTECTOR(R),COWL GRILLE			
50-783Y FD01-50-793	1	PROTECTOR(L),COWL GRILLE			
50-787A B252-51-PJ5A	1	FASTENER			
50-791 FD01-50-790A	1	GRILLE,COWL			
50-794 FD01-50-794A	1	PROTECTOR			
50-795 FD01-50-7P0	1	BAFFLE,COWL			
50-795A GA7B-50-795	6	CAP			
50-795B FD01-50-795	1	PROTECTOR,COWL GRILLE			
50-796B E016-50-796	2	CAP			
50-798 FD02-50-798	2	SCREW,GROMMET			
50-798A FD01-50-798	2	PROTECTOR,COWL GRILLE			
50-910C FDY2-50-91XB	1	GRILLE(R),FENDER			

5180 COWL & EXTRACTOR GRILLES

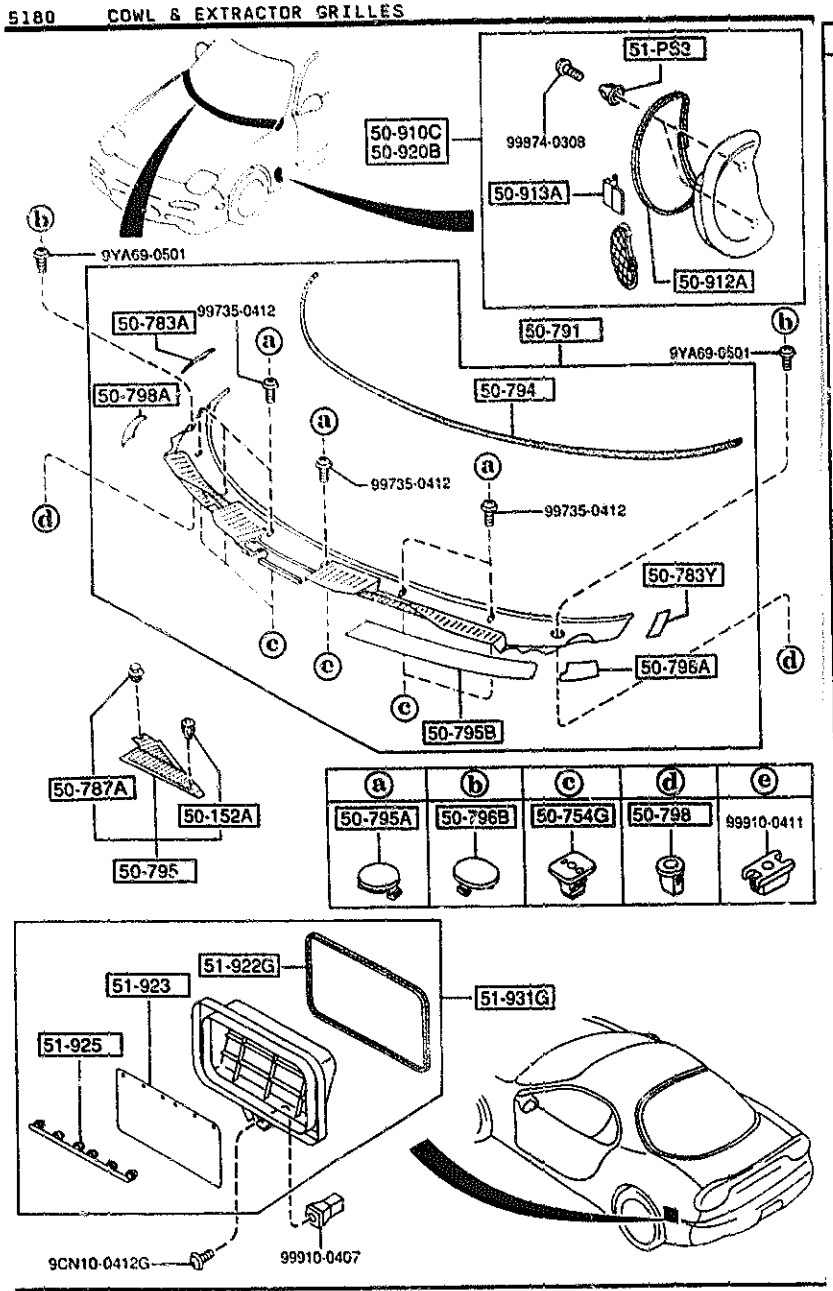

PART NO.	QTY	MODEL/RESTRICTION	MODEL/RESTRICTION	MODEL/RESTRICTION	FROM-TO
50-912A FD01-50-912	2	PROTECTOR,FENDER GRILLE			
50-913A FD01-50-913	2	CLIP,FENDER GRILLE			
50-920B FDY2-50-92XB	1	GRILLE(L),FENDER			
51-PS3 FD01-51-PS3	4	CLIP			
51-922G FD01-51-922A	1	GASKET,CHAMBER-EXTRACTOR			
51-923 FD01-51-923	1	VALVE,EXTRACT CHAMBER			
51-925 FD01-51-924	1	RETAINER,CHAMBER-EXTRACTOR			
51-931G FD01-51-920B	1	CHAMBER,EXTRACTOR			

5230 BONNET

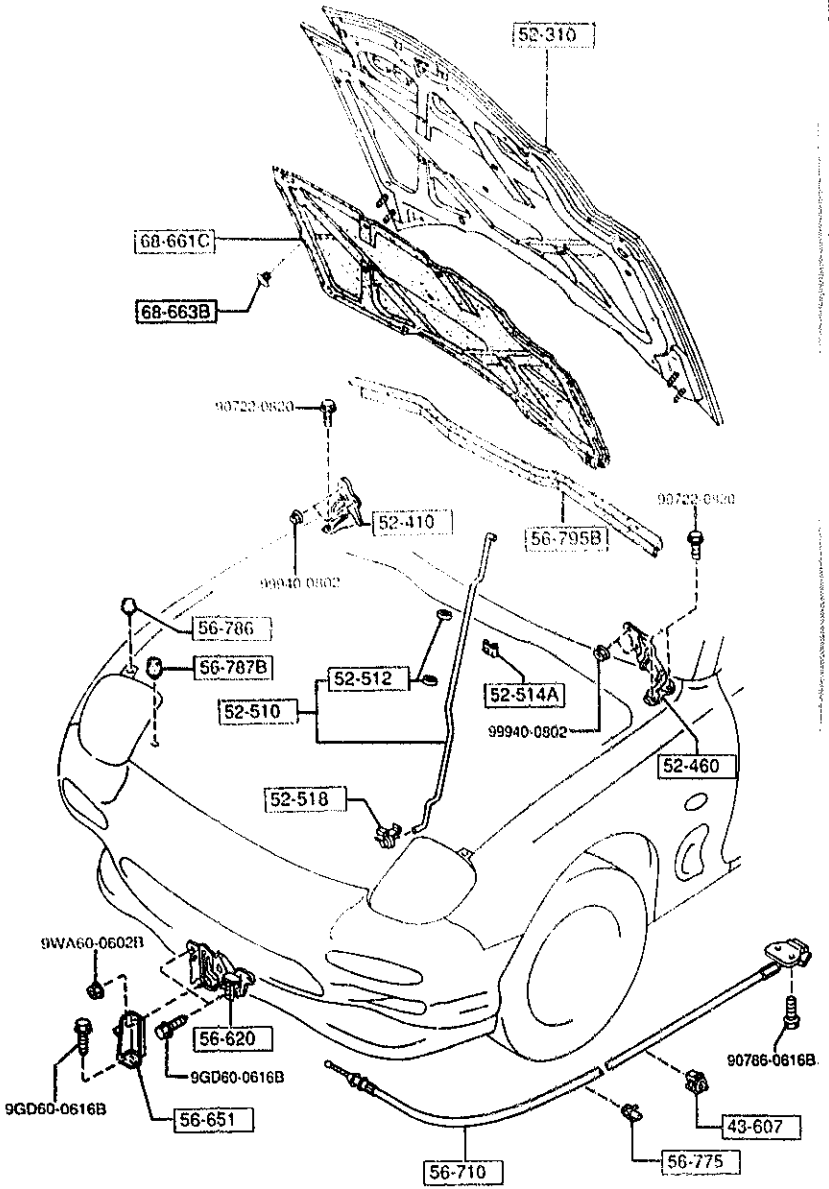

PART NO.	QTY	MODEL/RESTRICTION	MODEL/RESTRICTION	MODEL/RESTRICTION	FROM-TO
43-607		CLIP,RR BRAKE PIPE			
G309-43-607	1				
52-310		BONNET			
FD01-52-310G	1				
52-410		HINGE(R),BONNET			
FD01-52-410B	1				-5508
AN(FD01-52-410C)					
FD01-52-410C	1				5508-
52-460		HINGE(L),BONNET			
FD01-52-420B	1				-5508
AN(FD01-52-420C)					
FD01-52-420C	1				5508-
52-510		STAY,BONNET			
FD01-56-650	1				
52-512		SPACER,BONNET STAY			
FB01-52-512	2				
52-514A		HOLDER,BONNET STAY-SHROUD			
FD01-56-642	1				
52-518		HOLDER,BONNET STAY			
G144-52-518B	1				
56-620		LOCK,BONNET			
FD01-56-620B	1				
56-651		STAY,LOCK-BONNET			
FD01-56-67X	1				
56-710		WIRE,RELEASE-BONNET			
FD01-56-720C	1				
56-775		CLIP,WIRE-BONNET			
D001-56-731	1				
56-786		RUBBER(C),CUSHION-BONNET			

5508 FD333 -400229

5230 BONNET

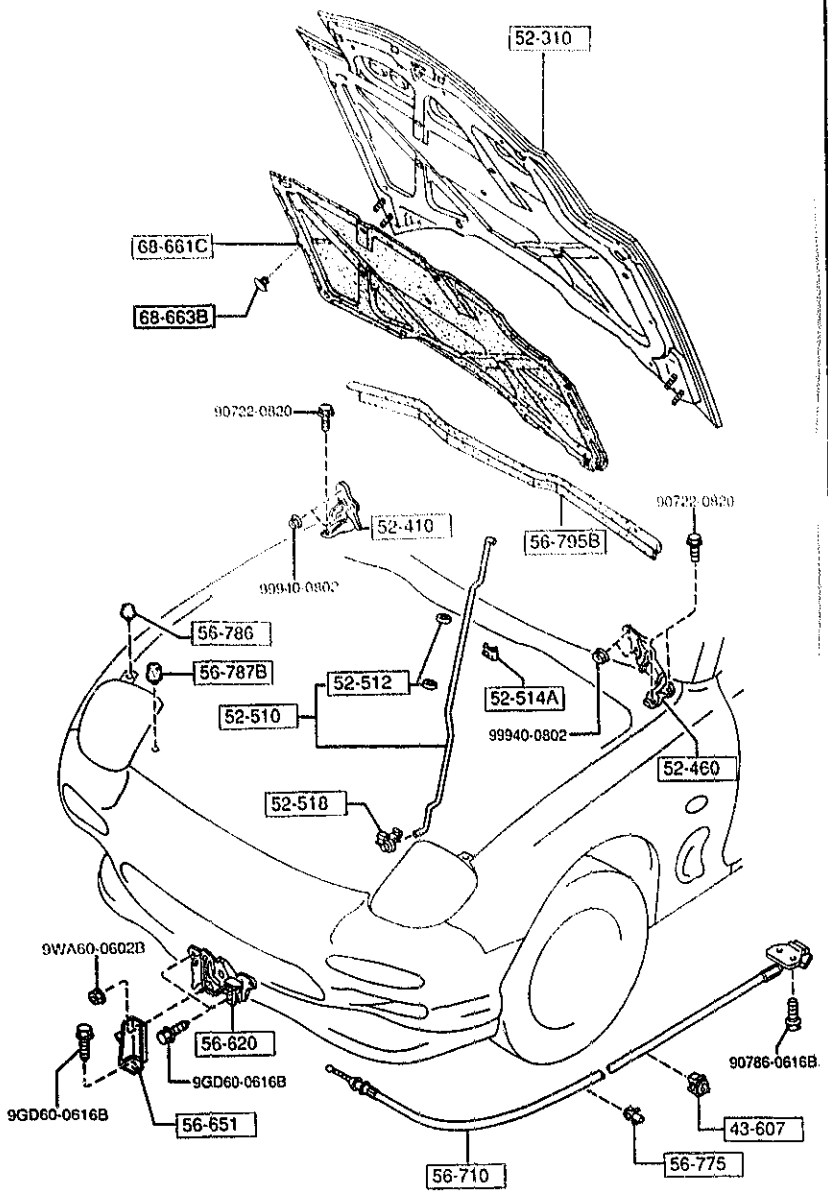

PART NO.	QTY	MODEL/RESTRICTION	MODEL/RESTRICTION	MODEL/RESTRICTION	FROM-TO
CONT'D					
FB01-56-786A	2				
+---------+					
| 56-787B |		RUBBER,CUSHION-BONNE			
+---------+		T FRT			
FB01-56-787B	2				
+---------+					
| 56-795B |		WEATHERSTRIP,BONNET-			
+---------+		REAR			
FD01-56-760B	1				
+---------+					
| 68-661C |		INSULATOR,BONNET			
+---------+					
FD01-68-601C	1				
+---------+					
| 68-663B |		FASTENER,BONNET			
+---------+					
GA2A-56-694	13				

5310 FRONT PANELS

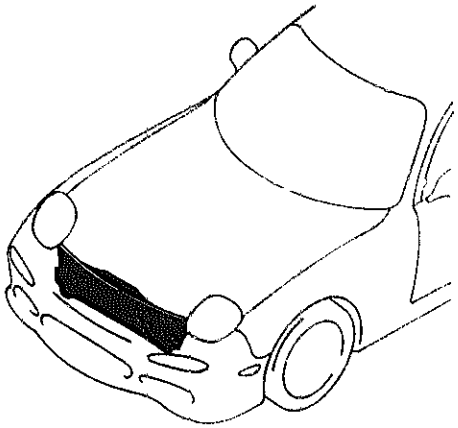

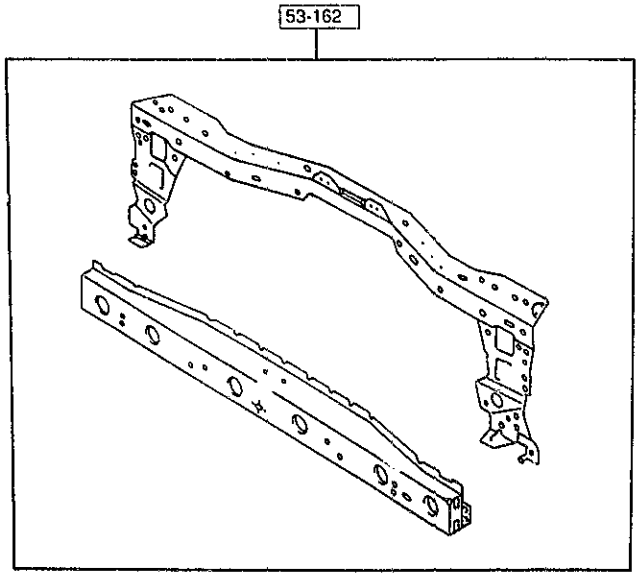

PART NO.	QTY	MODEL/RESTRICTION	MODEL/RESTRICTION	MODEL/RESTRICTION	FROM-TO
53-162		MEMBER,CROSS			
FD01-53-150A	1				

5320 FENDER & WHEEL APRON PANELS

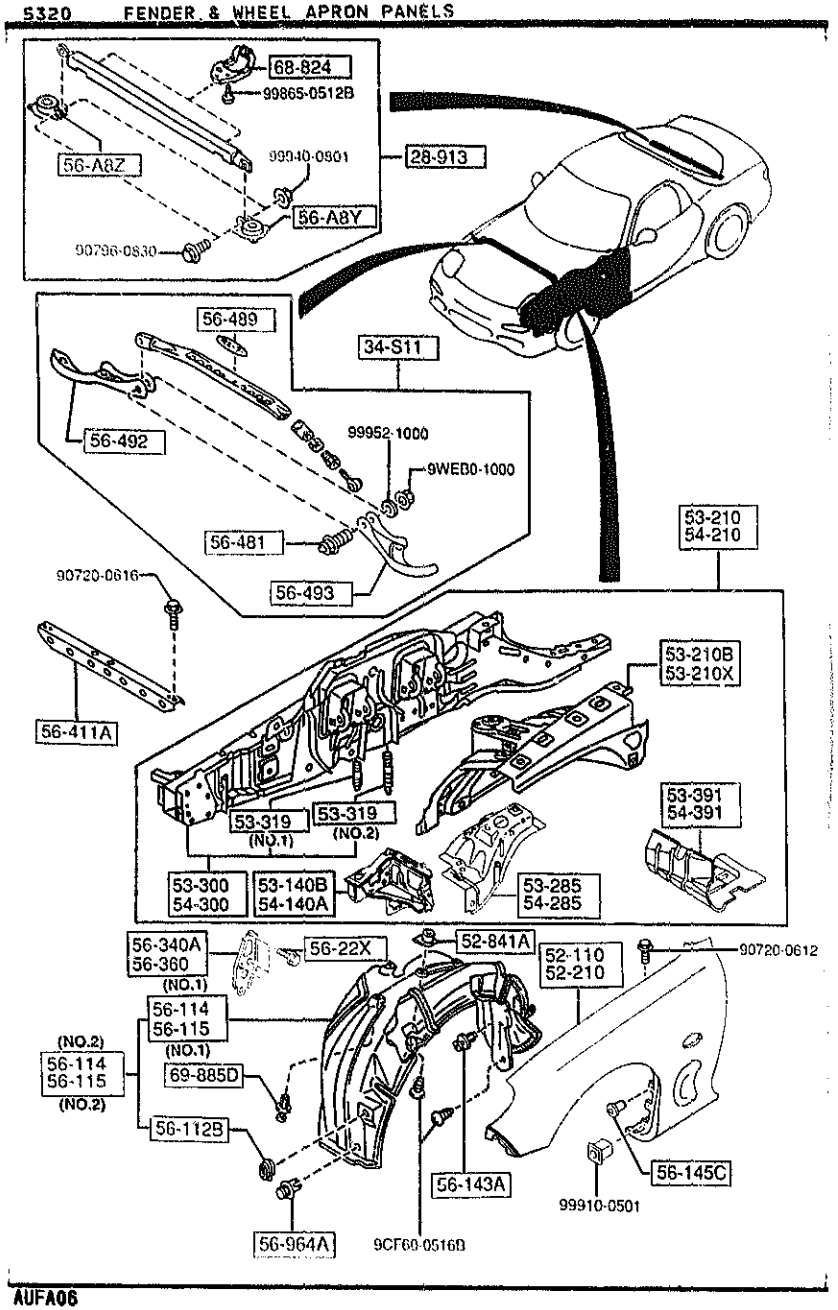

PART NO.	QTY	MODEL/RESTRICTION	MODEL/RESTRICTION	MODEL/RESTRICTION	FROM-TO
28-913		BAR,STRUT			
FD15-56-38Y	1				
34-S11		BAR,STRUT			
F111-56-48Z	1	(HARD SUSP)			
52-110		PANEL(R),FENDER-FRT.			
FD01-52-111D	1				
52-210		PANEL(L),FENDER-FRT.			
FD01-52-211D	1				
52-841A		NUT,CLIP			
B455-56-135	6				
53-140B		PANEL(R),SHROUD-SIDE			
FD01-53-12XJ	1				
53-210		PANEL(R),APRON & FRAME			
FD01-53-200A	1				
53-210B		PANEL(R),WHEEL APRON			
FD01-53-210E	1				
53-210X		PANEL(L),WHEEL APRON			
FD01-54-210F	1				
53-285		REINF.(R),WHL. APRON			
FD01-53-270A	1				
53-300		FRAME(R),SIDE-FRONT			
FD01-53-300M	1				
53-319		BOLT,MOUNT-MEMBER			
FD01-53-317A	2	(ILLUST. NO.1)			
FD01-53-318	2	(ILLUST. NO.2)			
53-391		BOX(R),TORQUE			
FD01-53-391	1				

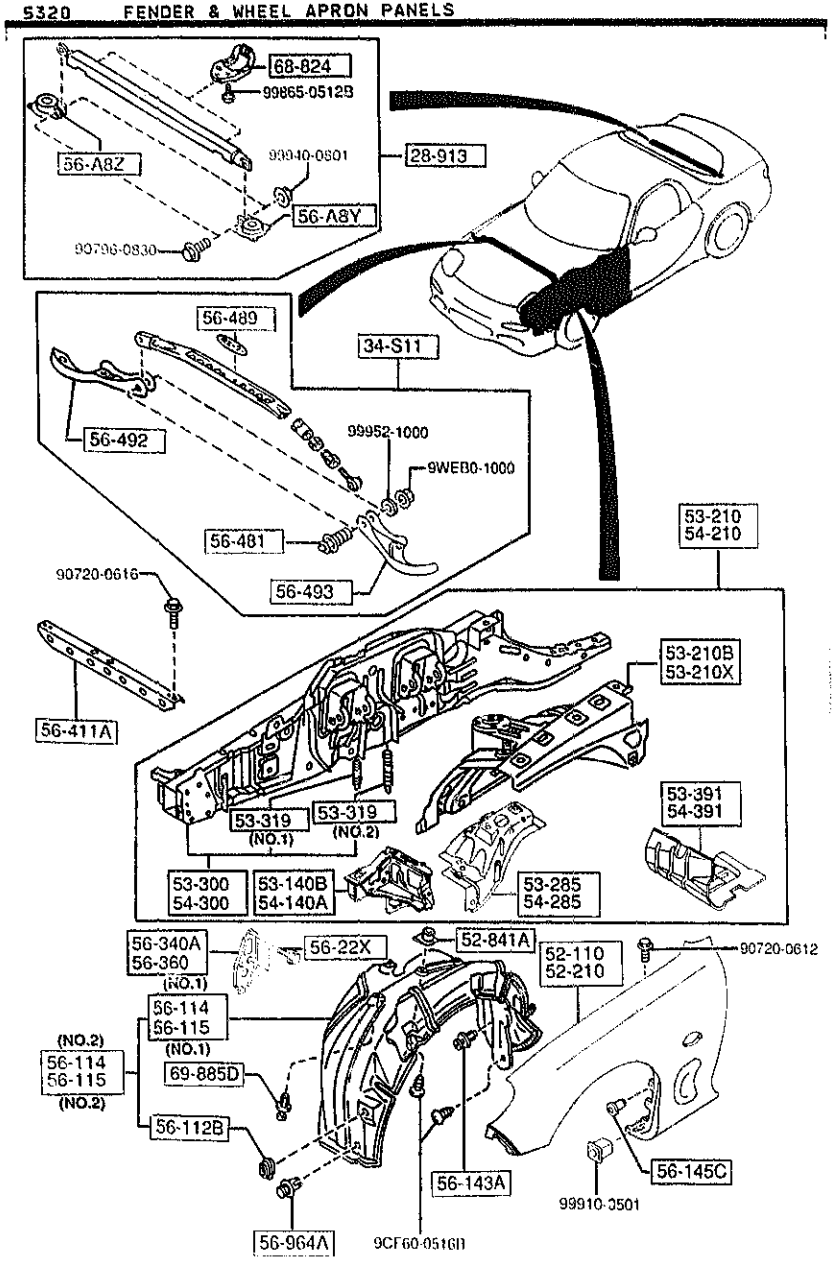

AUFA06

PART NO.	QTY	MODEL/RESTRICTION	MODEL/RESTRICTION	MODEL/RESTRICTION	FROM-TO
54-140A		PANEL(L),SHROUD-SIDE			
FD01-54-12XJ	1				
54-210		PANEL(L),APRON & FRAME			
FD01-54-200A	1				
54-285		REINF.(L),WHL. APRON			
FD01-54-270A	1				
54-300		FRAME(L),SIDE-FRONT			
FD01-54-300N	1				
54-391		BOX(L),TORQUE			
FD01-54-391	1				
56-A8Y		BRKT(L),STRUT BAR			
FD01-56-A8Y	1				
56-A8Z		BRKT(R),STRUT BAR			
FD01-56-A8Z	1				
56-112B		PLUG,DRAIN			
8092-56-053	2				
56-114		GUARD(R),MUD			
FD01-56-13ZF	1	(ILLUST. NO.1)			
FD01-56-130H	1	(ILLUST. NO.2)			
56-115		GUARD(L),MUD			
FD01-56-14ZF	1	(ILLUST. NO.1)			
FD01-56-140H	1	(ILLUST. NO.2)			
56-143A		RIVET,MUD GUARD			
B455-56-143	2				
56-145C		CLIP,MUD GUARD			
B455-56-145	2				
56-22X		BOLT,TIE DOWN HOOK-FRONT			
FB01-56-22X	6				

5320 FENDER & WHEEL APRON PANELS

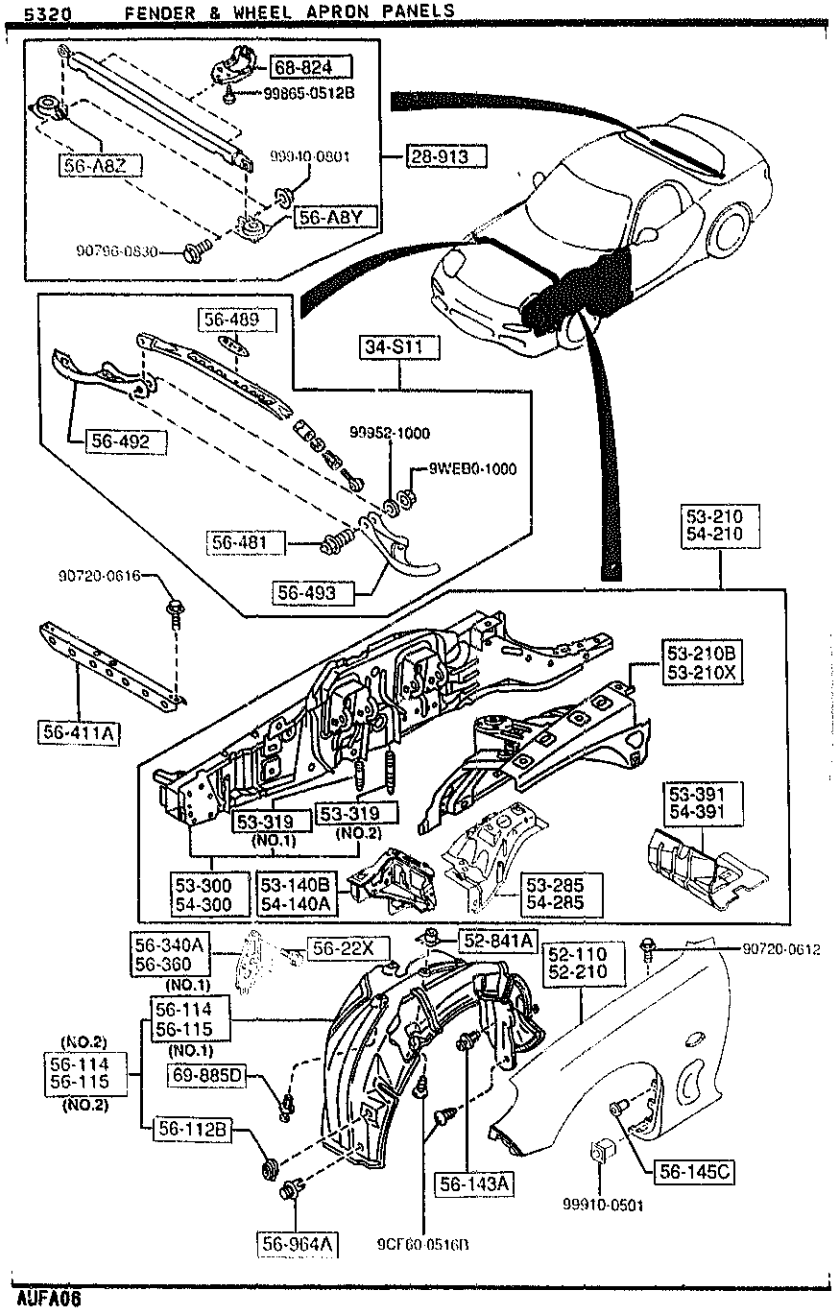

PART NO.	QTY	MODEL/RESTRICTION	MODEL/RESTRICTION	MODEL/RESTRICTION	FROM-TO
56-340A FD01-56-221	1	HOOK(R),TIE DOWN-FRONT			
56-360 FD01-56-231	1	HOOK(L),TIE DOWN-FRONT			
56-411A FD01-56-290A	1	MEMBER,CROSS			
56-481 FD03-56-491	2	BOLT,STRUT BAR (HARD SUSP)			
56-489 FD03-56-489	1	PLATE,LOGO-STRUT BAR (HARD SUSP)			
56-492 F111-56-482	1	PLATE(R),STRUT BAR (HARD SUSP)			
56-493 FD03-56-483A	1	PLATE(L),STRUT BAR (HARD SUSP)			
56-964A FB01-56-964	6	RIVET,SEAL PLATE-SHROUD			
68-824 FD01-68-305	2	HINGE			
69-885D NA01-56-145	16	FASTENER			

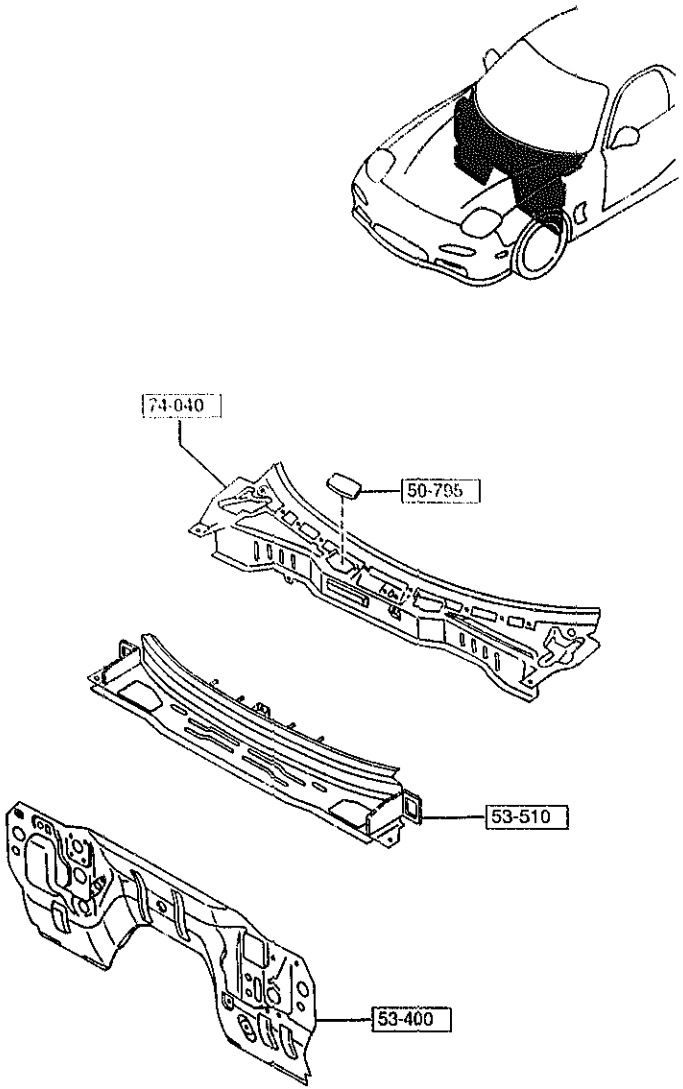

5330 -1 * DASH & COWL PANELS

PART NO.	QTY	MODEL/RESTRICTION	MODEL/RESTRICTION	MODEL/RESTRICTION	FROM-TO
50-795		BAFFLE,COWL			
FD01-56-351	1				
53-400		PANEL,DASH-LOWER			
FD01-54-400E	1	(W/O SUN ROOF) (W/STEEL SUN ROOF)			
FD04-54-400E	1	(W/GLASS SUN ROOF)			
53-510		PANEL,DASH-UPPER			
FD15-53-510	1				
74-040		PANEL,COWL			
FD01-70-610A	1				

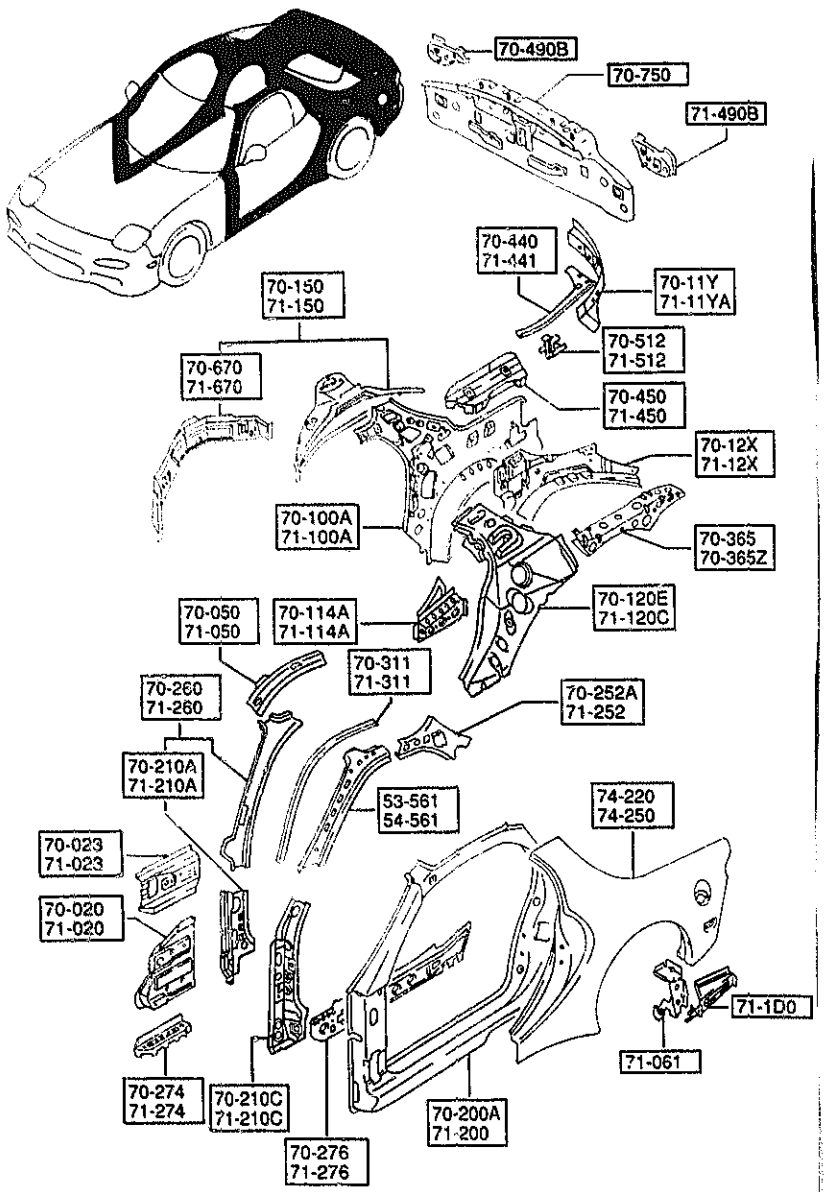

PART NO.	QTY	MODEL/RESTRICTION	MODEL/RESTRICTION	MODEL/RESTRICTION	FROM-TO
53-561 FD01-70-242B	1	REINF.(R),F. PILLAR INNER			
54-561 FD01-71-242B	1	REINF.(L),F. PILLAR INNER			
70-020 FD01-70-020B	1	PANEL(R),COWL SIDE			
70-023 FD01-70-651A	1	REINF.(R),COWL SIDE			
70-050 FD01-70-050	1	RAIL(R),ROOF-INNER			
70-100A FDY1-70-110A	1	PANEL(R),REAR PILLAR			
70-11Y FD01-70-11Y	1	PILLAR'C'(R),REAR-IN NER			
70-114A FD15-70-11Z	1	JUNCTION(R),CORNER-Q /PANE			
70-12X FD01-70-12XA	1	REINF.(R),SUSPENSION HSG			
70-120E FD01-70-120B	1	REINF.(R),REAR PILLA R IN.			
70-150 FD01-70-150D	1	PANEL(R),WHEEL HOUSE			
70-200A FDY1-70-200	1	FRAME(R),SIDE-OUTER			
70-210A FD01-70-230A	1	PILLAR(R),HINGE			
70-210C FD01-70-030D	1	REINF.(R),HINGE			

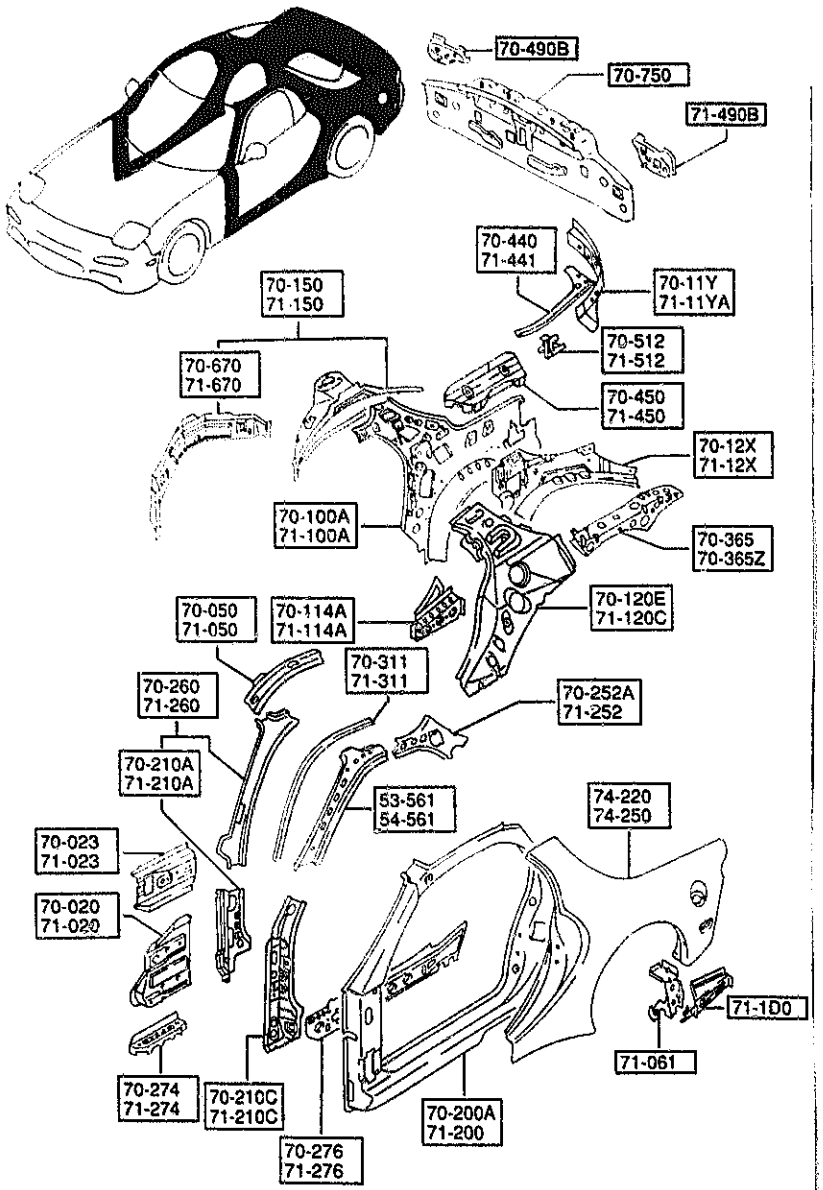

PART NO.	QTY	MODEL/RESTRICTION	MODEL/RESTRICTION	MODEL/RESTRICTION	FROM-TO
70-252A FD01-70-252A	1	REINF.(R),ROOF RAIL			
70-260 FDY1-70-24X	1	PILLAR(R),FRT.-INNER (W/O SUN ROOF)			
FDY4-70-24X	1	(W/STEEL SUN ROOF) (W/GLASS SUN ROOF)			
70-274 FD01-70-274A	1	GUSSET(R),SIDE SILL OUTER			
70-276 FD01-70-272B	1	REINF.(R),SIDE SILL			
70-311 FD01-70-311A	1	RAIL(R),RAIN			
70-365 FD01-70-130A	1	REINF.(R),BELT LINE-C.PIL			
70-365Z FD01-71-131A	1	REINF.(L),BELT LINE-C.PIL			
70-440 FD01-70-440B	1	PLATE(R),CORNER			
70-450 FD01-70-1X1	1	PANEL(R),FLOOR SIDE			
70-490B FD01-70-490B	1	BRACKET(R),LAMP			
70-512 FD01-70-119	1	BRACKET(R),TRIM-QTR PANEL			
70-670 FD01-70-15XC	1	PLATE(R),CLOSING-QTR PANEL			
70-750 FD01-70-750C	1	PANEL,REAR END			

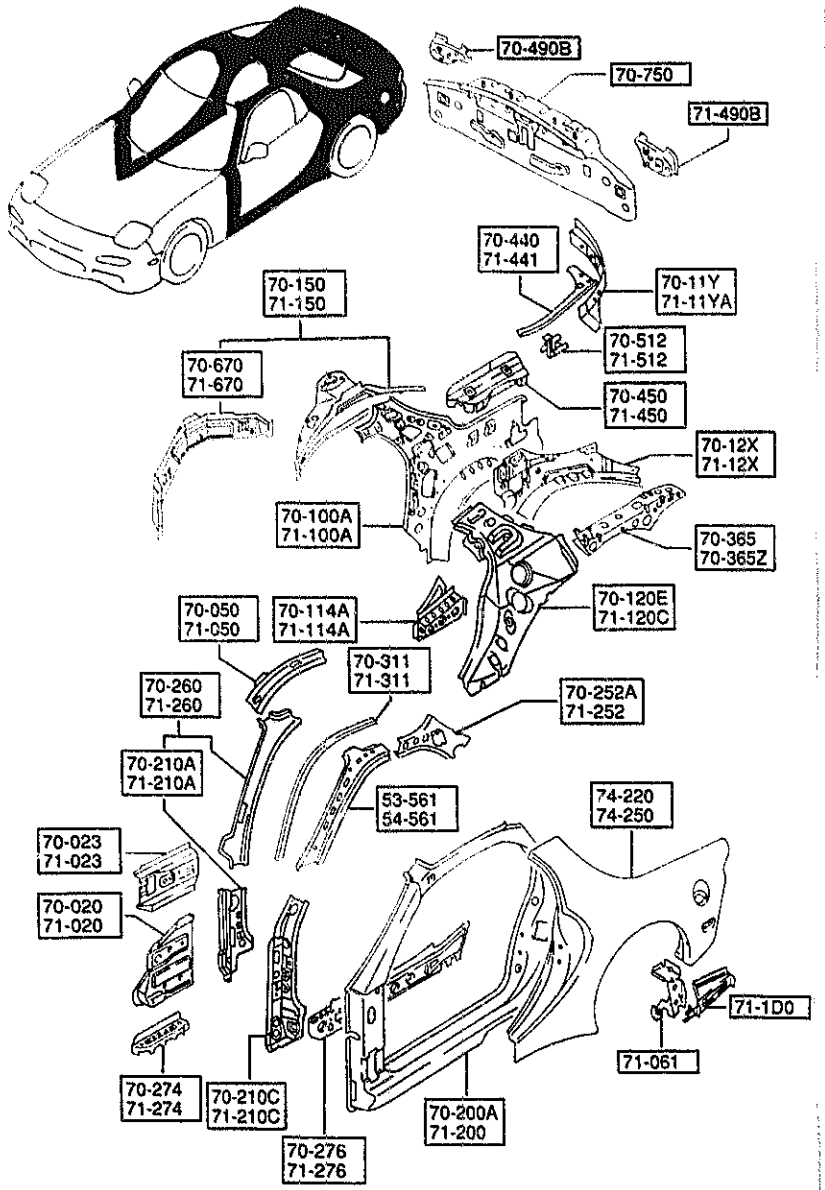

PART NO.	QTY	MODEL/RESTRICTION	MODEL/RESTRICTION	MODEL/RESTRICTION	FROM-TO
71-020 FD01-71-020B	1	PANEL(L),COWL SIDE			
71-023 FD01-71-651A	1	REINF.(L),COWL SIDE			
71-050 FD01-71-050	1	RAIL(L),ROOF-INNER			
71-061 FD01-71-180A	1	GUSSET(L),RR PILLAR			
71-1D0 FD01-71-1D0	1	REINF.(L),FLOOR SIDE			
71-100A FDY1-71-110A	1	PANEL(L),REAR PILLAR			
71-11YA FD01-71-11Y	1	PILLAR'C'(L),REAR-INNER			
71-114A FD15-71-11Z	1	JUNCTION(L),CORNER-Q/PANE			
71-12X FD01-71-12XB	1	REINF.(L),SUSPENSION HSG			
71-120C FD01-71-120B	1	REINF.(L),REAR PILLAR IN.			
71-150 FD01-71-150E	1	PANEL(L),WHEEL HOUSE			
71-200 FDY1-71-200	1	FRAME(L),SIDE-OUTER			
71-210A FD01-71-230A	1	PILLAR(L),HINGE			
71-210C FD01-71-030D	1	REINF.(L),HINGE			

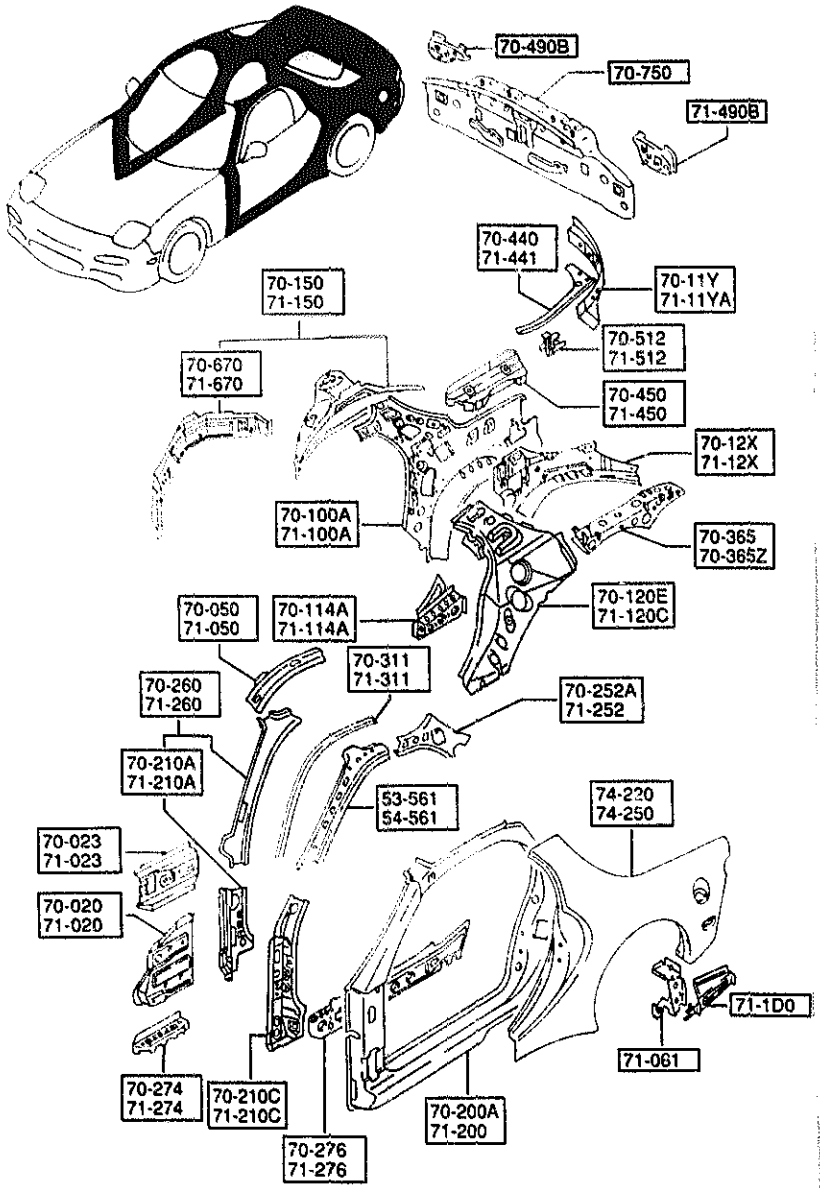

PART NO.	QTY	MODEL/RESTRICTION	MODEL/RESTRICTION	MODEL/RESTRICTION	FROM-TO
71-252		REINF.(L),ROOF RAIL			
FD01-71-252A	1				
71-260		PILLAR(L),FRT.-INNER			
FDY1-71-24X	1	(W/O SUN ROOF)			
FDY4-71-24X	1	(W/STEEL SUN ROOF) (W/GLASS SUN ROOF)			
71-274		GUSSET(L),SIDE SILL OUTER			
FD01-71-274A	1				
71-276		REINF.(L),SIDE SILL			
FD01-71-272B	1				
71-311		RAIL(L),RAIN			
FD01-71-311A	1				
71-441		PLATE(L),CORNER			
FD01-71-440B	1				
71-450		PANEL(L),FLOOR SIDE			
FD01-71-1X1	1				
71-490B		BRACKET(L),LAMP			
FD01-71-490B	1				
71-512		BRACKET(L),TRIM-QTR PANEL			
FD01-71-119	1				
71-670		PLATE(L),CLOSING-QTR PANEL			
FD01-71-15XD	1				
74-220		PANEL(R),FENDER-REAR			
FDY1-70-400B	1				
74-250		PANEL(L),FENDER-REAR			
FDY1-71-400B	1				

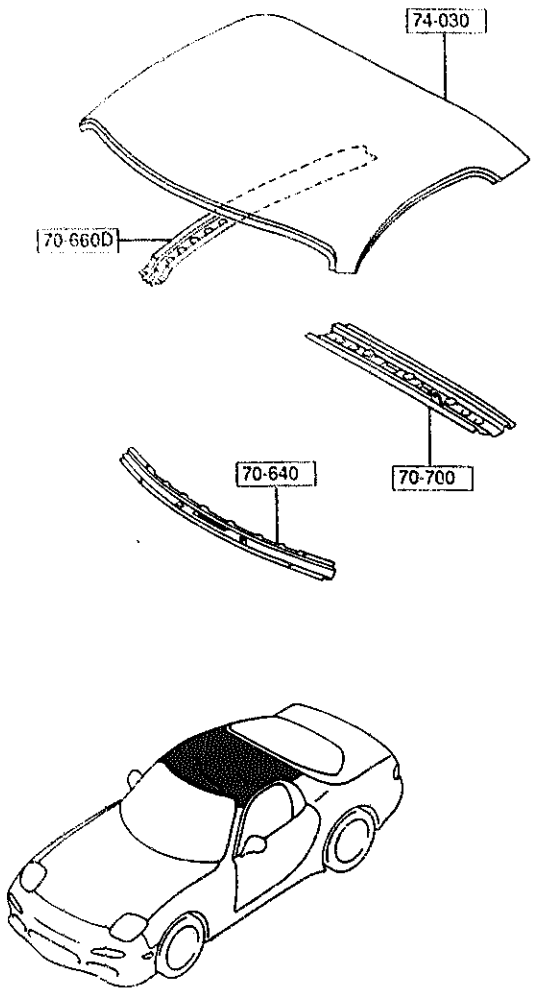

5360 -1 * ROOF PANELS

PART NO.	QTY	MODEL/RESTRICTION	MODEL/RESTRICTION	MODEL/RESTRICTION	FROM TO
70-640		HEADER,FRONT			
FD01-70-640	1				
70-660D		REINF.,ROOF			
FD01-70-661	1	(W/O SUN ROOF)			
70-700		HEADER,REAR			
FD01-70-700B	1				
74-030		PANEL,ROOF			
FD04-70-600B	1	(W/STEEL SUN ROOF) (W/GLASS SUN ROOF)			
FD01-70-601A	1	(W/O SUN ROOF)			

5370 FLOOR PANELS

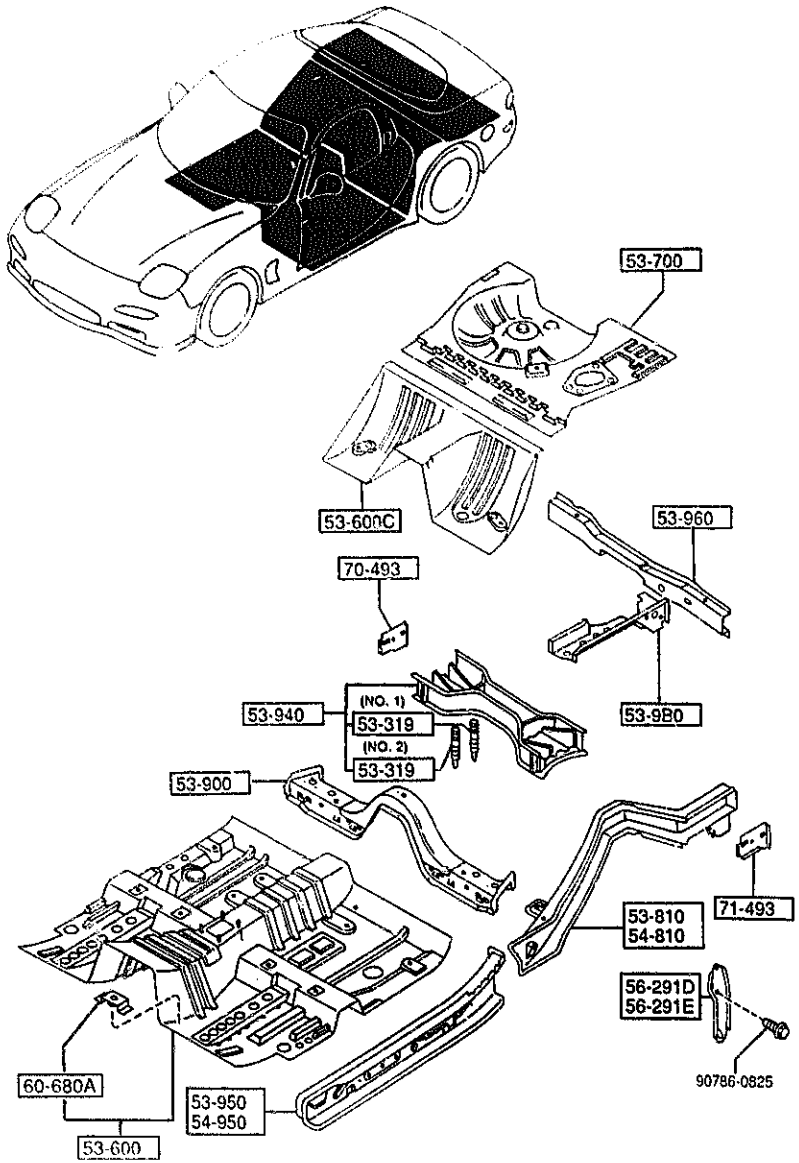

PART NO.	QUY	MODEL/RESTRICTION	MODEL/RESTRICTION	MODEL/RESTRICTION	FROM-TO
53-319		BOLT,MOUNT-MEMBER			
FD01-53-317A	2	(ILLUST. NO.1)			
FD01-53-318	2	(ILLUST. NO.2)			
53-600		PAN,FLOOR-FRONT			
FDY1-53-600A	1				
53-600C		PAN,FLOOR-CENTER			
FDY1-53-720	1				
53-700		PAN,FLOOR-REAR			
FDY1-53-710	1				
53-810		FRAME(R),REAR SIDE			
FD01-53-810F	1				
53-980		FRAME,CENTER-REAR SIDE			
FD01-53-980A	1				
53-900		MEMBER NO.3,CROSS			
FD01-53-910B	1				
53-940		MEMBER NO.4,CROSS			
FD01-53-930C	1				
53-950		PANEL(R),SIDE SILL			
FD01-53-950B	1				
53-960		MEMBER NO.5,CROSS			
FD01-53-940A	1				
54-810		FRAME(L),REAR SIDE			
FD01-54-810H	1				
54-950		PANEL(L),SIDE SEAL			
FD01-54-950A	1				
56-291D		HOOK(R),TIE DOWN			
FD01-56-251B	1				

5370 FLOOR PANELS

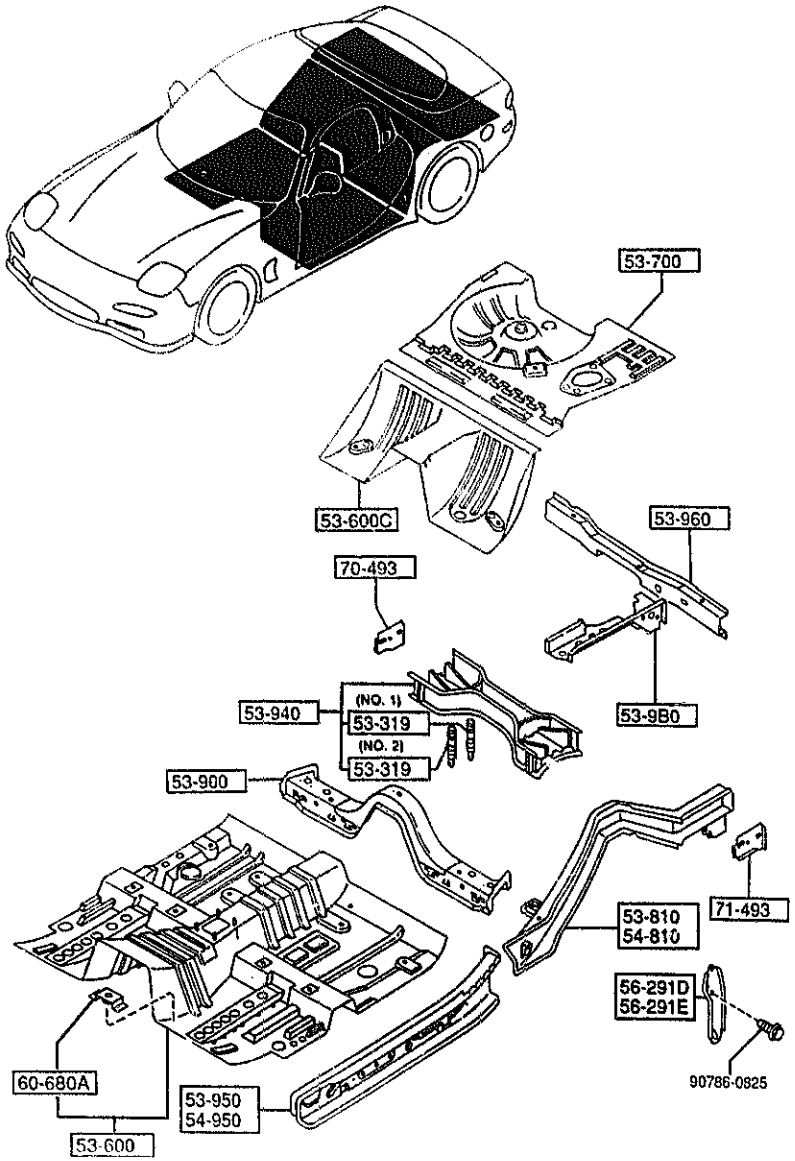

PART NO.	QTY	MODEL/RESTRICTION	MODEL/RESTRICTION	MODEL/RESTRICTION	FROM-TO
56-291E FD01-56-252B	1	HOOK(L),TIE DOWN			
60-680A 0305-53-160	2	BRACKET,FLOOR			
70-493 FD01-53-781B	1	PLATE(R),CLOSING-R.F ENDER			
71-493 FD01-54-781B	1	PLATE(L),CLOSING-R.F ENDER			

5380 FLOOR ATTACHMENTS (HOLE COVERS)

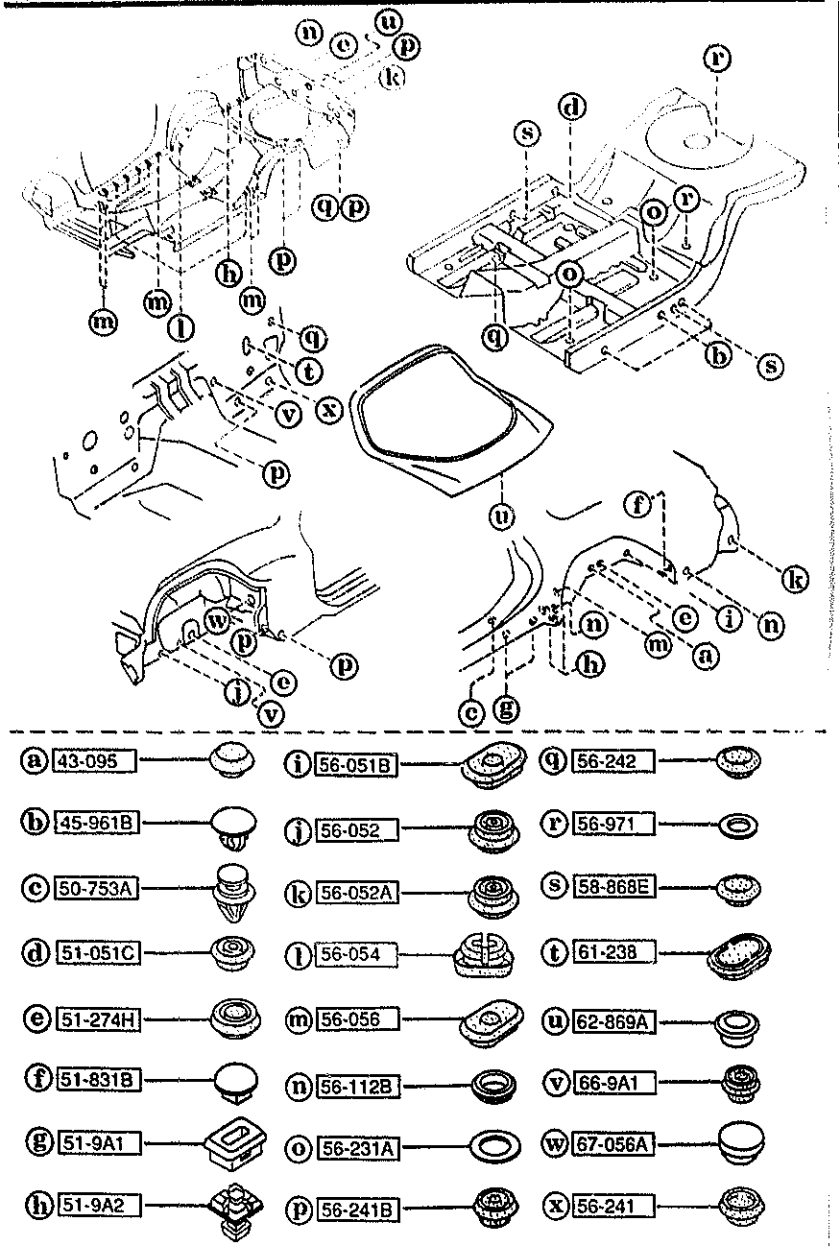

AUFA06

5380 -1 FLOOR ATTACHMENTS (HOLE COVERS)

PART NO.	QTY	MODEL/RESTRICTION	MODEL/RESTRICTION	MODEL/RESTRICTION	FROM-TO
43-095 H001-43-095	2	GROMMET			
45-961B H002-45-961	3	CAP (W/O HEAD LAMP CLEANER)			
50-753A FD01-50-753	2	FASTENER			
51-051C BR70-51-264	1	PLUG,HOLE (W/O HEAD LAMP CLEANER)			
51-274H BF67-51-261	6	GROMMET			
51-831B DA14-51-831	2	PLUG,HOLE-FLAP			
51-9A1 FB03-51-9A1	4	PLUG'A',BLIND-S.SPOILER			
51-9A2 FB03-51-9A2	8	PLUG'B',BLIND-S.SPOILER			
56-051B GA5R-56-051	2	COVER,HOLE			
56-052 B092-56-052	2	PLUG,DRAIN D=12MM			
56-052A H260-56-052	3	PLUG,HOLE-F.SIDE FRAME			
56-054 FD01-56-051	4	PLUG,HOLE			
56-056 GA5R-56-052	22	COVER,HOLE			

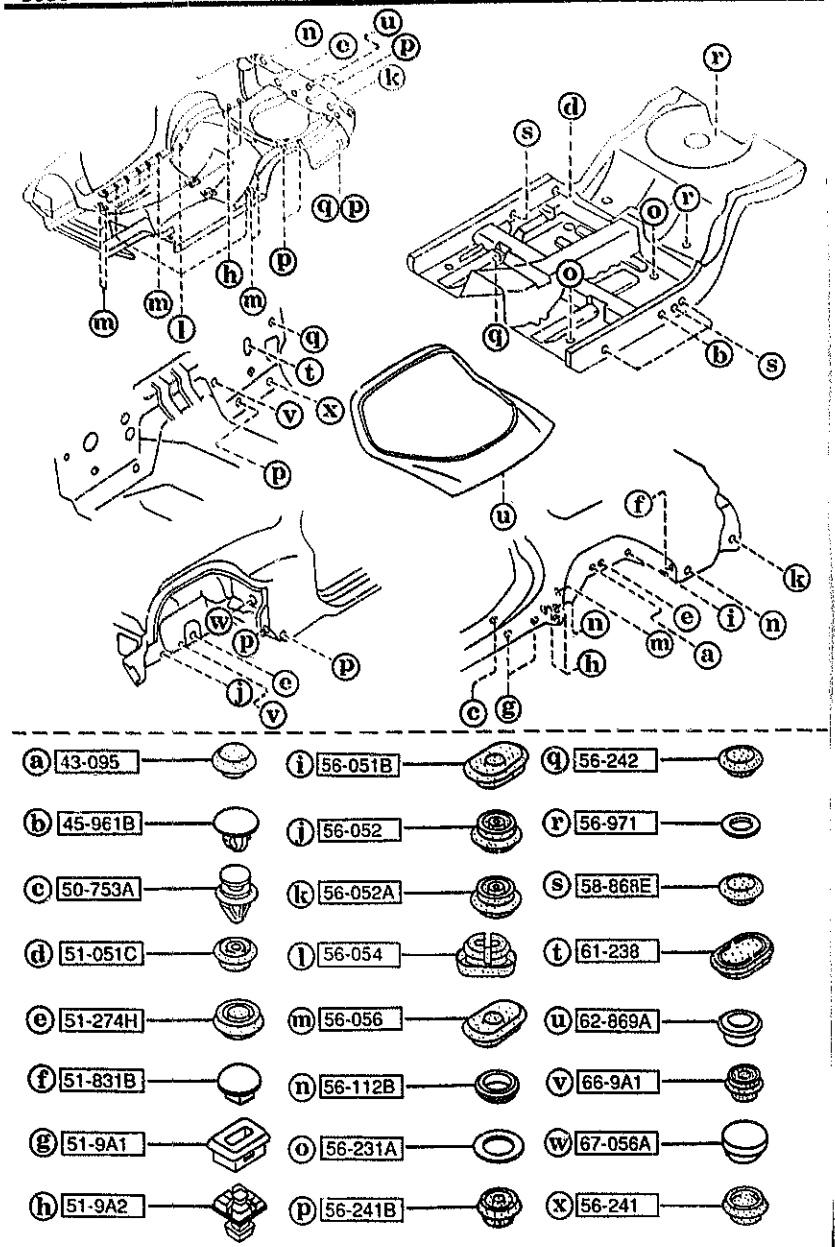

AUFA06

PART NO.	QTY	MODEL/RESTRICTION	MODEL/RESTRICTION	MODEL/RESTRICTION	FROM-TO
56-112B FB01-56-057	6	PLUG,DRAIN			
56-231A 8173-56-053	4	COVER,SERVICE HOLE			
56-241 0118-56-241	1	PLUG,DRAIN (W/AIR CON.)			
0118-56-241	2	(W/O AIR CON.)			
56-241B B001-56-051	10	PLUG			
56-242 0118-56-242B	6	PLUG,DRAIN			
56-971 0866-56-971	3	COVER,HOLE			
58-868E 0559-58-868	2	PLUG,SERVICE COVER			
61-238 H260-61-238	1	GROMMET,REAR FLOOR			
62-869A B216-62-869	2	PLUG,DRAIN-LIFT GATE UP.			
66-9A1 KA01-66-9A1	2	COVER,HOLE-ANTENNA (W/O SUN ROOF) (W/STEEL SUN ROOF)			
KA01-66-9A1	3	(W/GLASS SUN ROOF)			
67-056A FD01-67-HD1	1	COVER,HOLE (W/O HEAD LAMP CLEANER)			

5390 FLOOR ATTACHMENTS

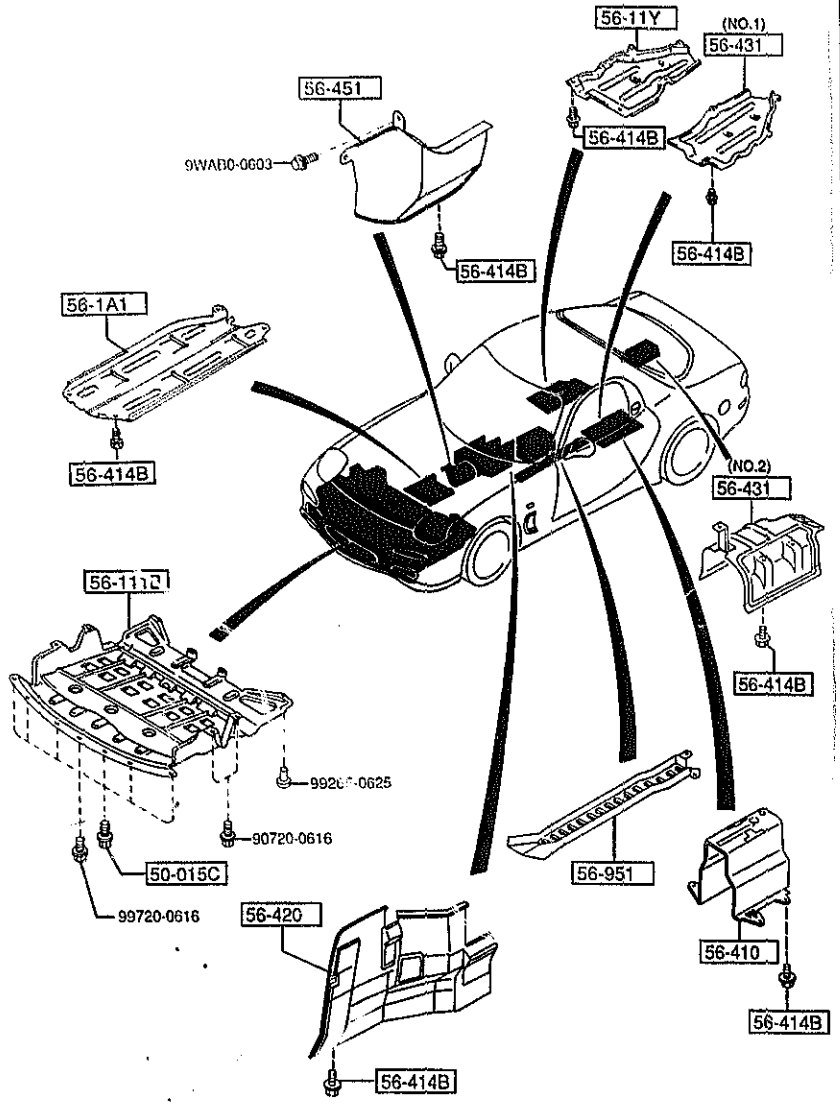

PART NO.	QTY	MODEL/RESTRICTION	MODEL/RESTRICTION	MODEL/RESTRICTION	FROM-TO
50-015C BR70-50-0Z2	6	BOLT			
56-1A1 FD01-56-1A1C	1	COVER,T/MISSION (MT)			
56-11Y FD01-56-113A	1	COVER,UNDER-REAR			
56-111B FD01-56-1B0B	1	COVER,UNDER-FRONT			
56-410 FD01-56-430C	1	INSULATOR,HEAT-FRONT			
56-414B FB01-56-414	25	BOLT,INSULATOR,FRT HEAT (AT)			
FB01-56-414	29	(MT)			
56-420 FD01-56-420C	1	INSULATOR,FRONT			
56-431 FD01-56-114A	1	INSULATOR,HEAT (ILLUST. NO.1)			
FD01-56-450	1	(ILLUST. NO.2)			
56-451 FD01-56-411	1	INSULATOR			
56-951 FD01-56-181	1	PROTECTOR			

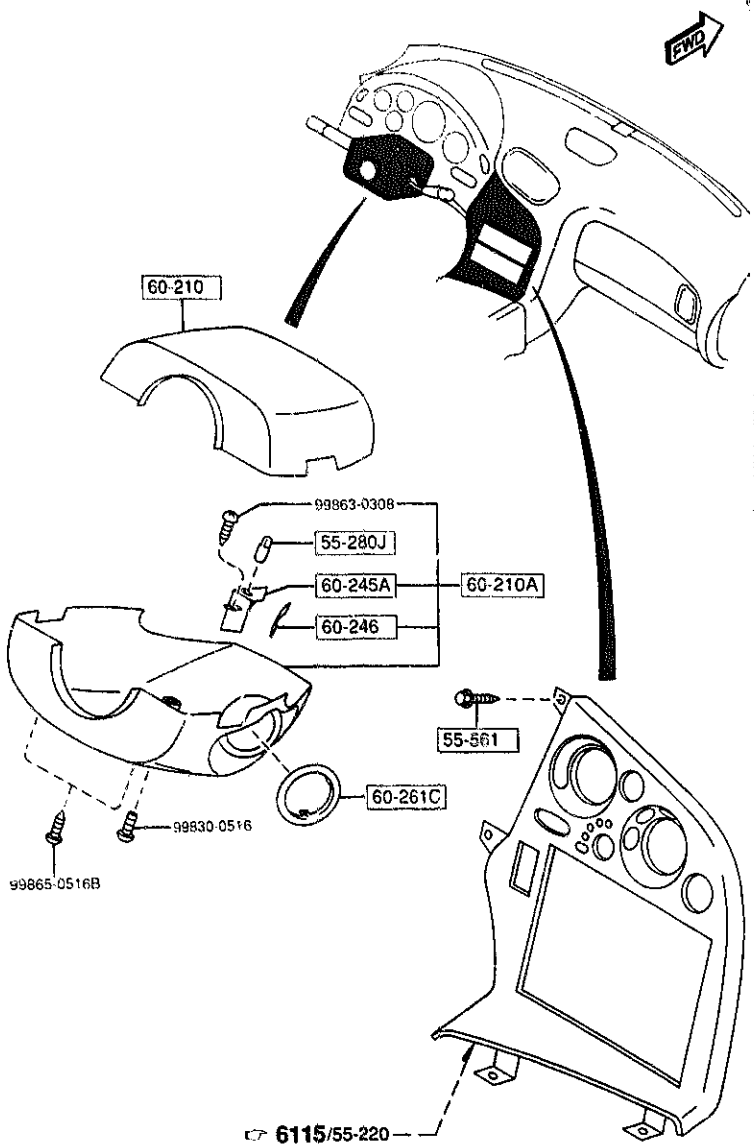

5500 -1 * DASHBOARD EQUIPMENTS

PART NO.	QTY	MODEL/RESTRICTION	MODEL/RESTRICTION	MODEL/RESTRICTION	FROM-TO
55-280J B456-60-223	1	BULB			
55-561 B455-55-561	4	BOLT,INST. PANEL			
60-210 FD01-60-221C	1	COVER,COLUMN-UPPER			
00	INT-	FE5 FE6 FE7 BLACK			
60-210A FD01-60-230D	1	COVER,COLUMN-LOWER			
00	INT-	FE5 FE6 FE7 BLACK			
60-245A FD01-60-245A	1	CASE,LAMP			
60-246 FD01-60-246	1	LENS,COLUMN COVER			
60-261C LA01-60-261	1	RING SET-KEY CYLINDER			-5801
KB75-60-261A	1				5801-

5801 FD333 -400230

5520 METER HOOD

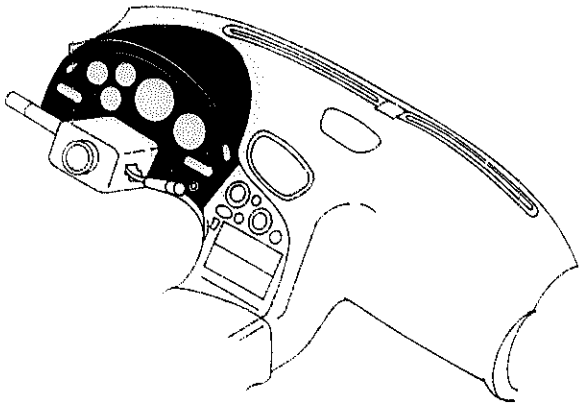

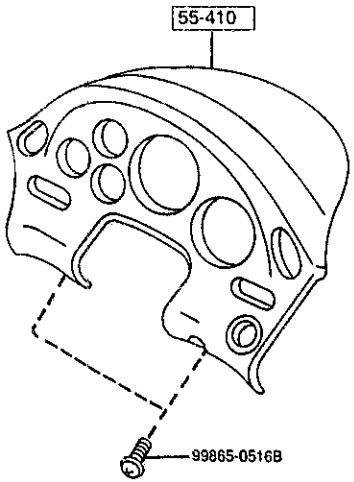

5520 -1 * METER HOOD

PART NO.	QTY	MODEL/RESTRICTION	MODEL/RESTRICTION	MODEL/RESTRICTION	FROM-TO
+----------+ | 55-410 | +----------+ FD15-55-420	1	HOOD,METER			

5540 METER COMPONENTS

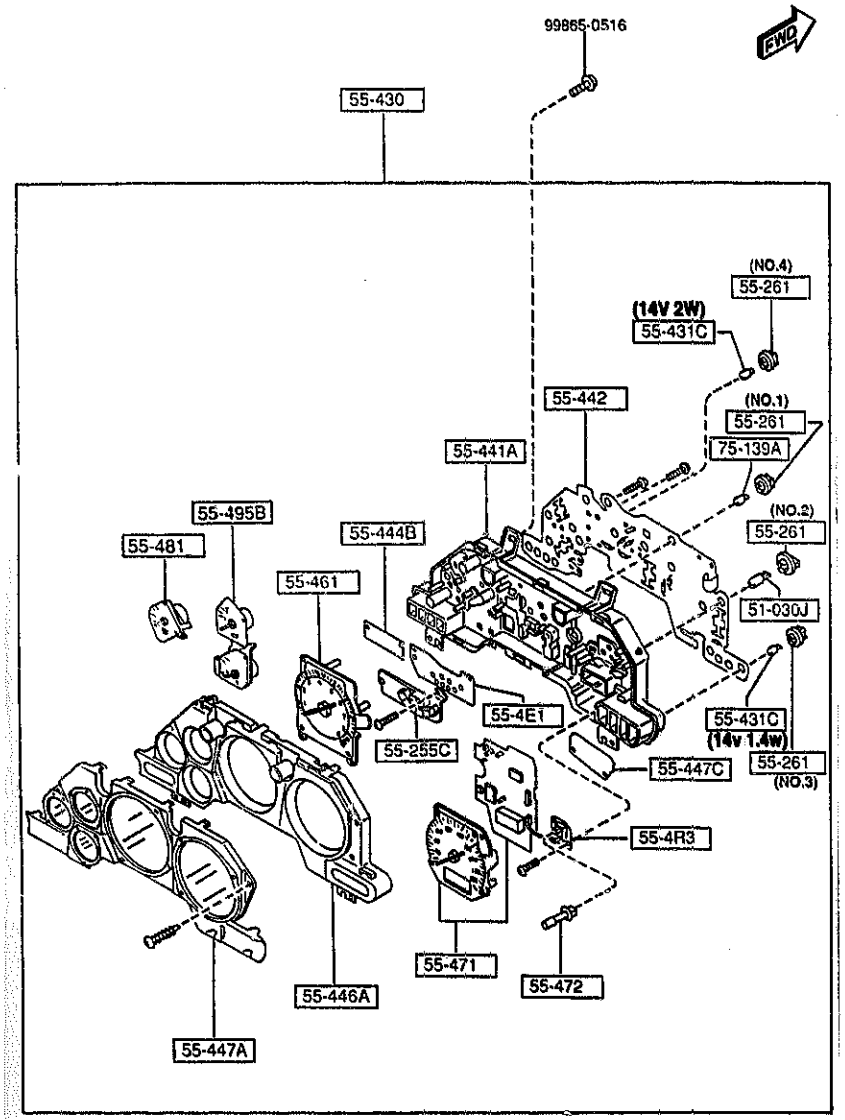

5540 -1 METER COMPONENTS

PART NO.	QTY	MODEL/RESTRICTION	MODEL/RESTRICTION	MODEL/RESTRICTION	FROM-TO
51-030J		BULB			
99701-6030	4	12V 3.4W			
55-255C		CASE,WARNING UNIT			
FD01-55-4W1	1	((MT)>(NOR. SUSP))			
FD02-55-4W1	1	(AT)			
55-261		SOCKET			
B456-55-261	6	12V 3W (ILLUST. NO.1)			
FD01-55-261	4	(ILLUST. NO.2)			
FD02-55-261	6	(ILLUST. NO.3) ((MT)>(HARD SUSP)) (AT)			
FD02-55-261	7	(ILLUST. NO.3) ((MT)>(NOR. SUSP))			
FD03-55-261	2	(ILLUST. NO.4)			
55-4E1		INDICATOR,ECONOMY-METER			
FD02-55-4E1	1	(AT)			
55-4R3		SWITCH			
FD01-55-487	1				
55-430		METER SET			
FD15-55-430D	1	((MT)>(NOR. SUSP))			
FD16-55-430D	1	((MT)>(HARD SUSP))			
FD17-55-430D	1	(AT)			
55-431C		BULB'B',WARNING UNIT			
FD01-55-431	2	14V/2W			
FD02-55-431	6	14V/1.4W ((MT)>(HARD SUSP)) (AT)			
FD02-55-431	7	14V/1.4W ((MT)>(NOR. SUSP))			
55-441A		CASE,METER			
FD01-55-441	1				

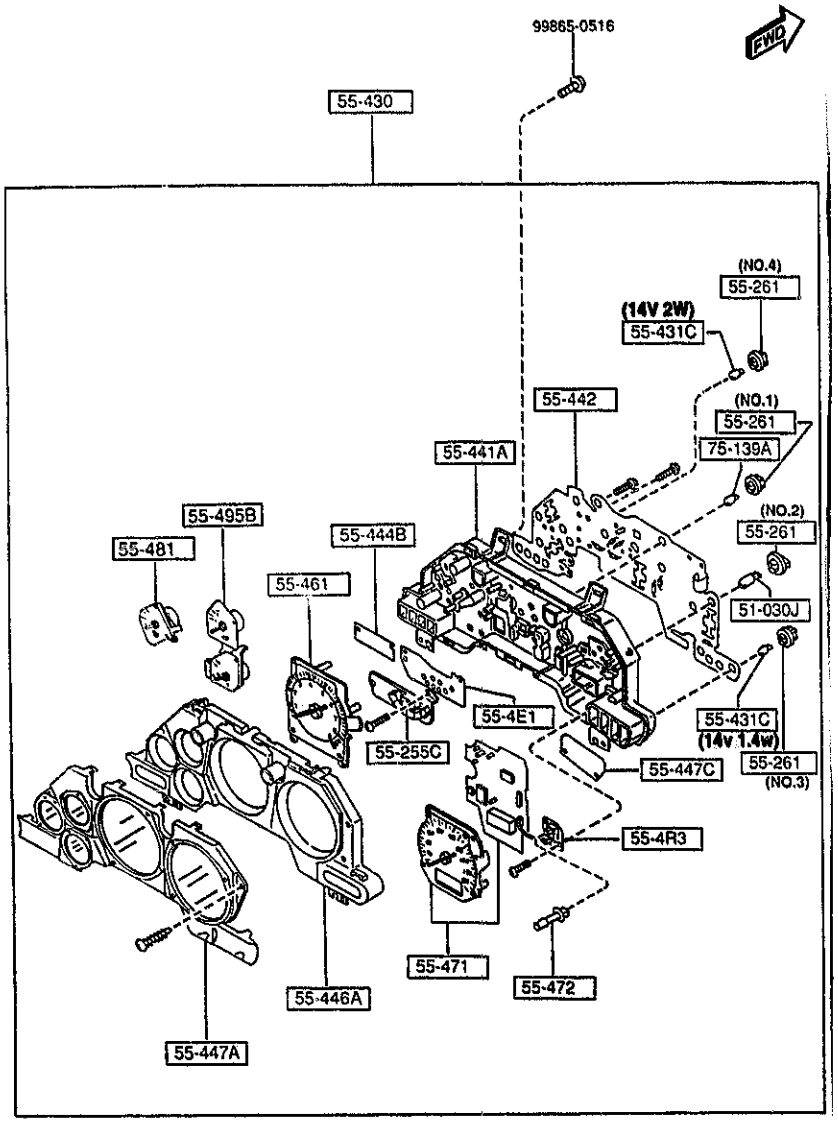

PART NO.	QTY	MODEL/RESTRICTION	MODEL/RESTRICTION	MODEL/RESTRICTION	FROM-TO
55-442		PLATE NO.1,PRINT			
FD01-55-442	1	((MT)>(NOR. SUSP))			
FD02-55-442	1	(AT)			
FD03-55-442	1	((MT)>(HARD SUSP))			
55-444B		LENS,WARNING			
FD01-55-444A	1				
55-446A		PLATE,WINDOW			
FD01-55-446	1				
55-447A		GLASS,FRONT-WARNING UNIT			
FD01-55-447A	1				
55-447C		LENS,WARNING			
FD01-55-445	1				
55-461		TACHOMETER			
FD15-55-461A	1	((MT)>(NOR. SUSP))			
FD16-55-461A	1	((MT)>(HARD SUSP))			
FD17-55-461A	1	(AT)			
55-471		SPEEDOMETER			
FD15-55-471	1	(MT)			
FD17-55-471	1	(AT)			
55-472		KNOB,TRIPMETER			
FD01-55-473	1				
55-481		METER,FUEL			
FD01-55-481	1				
55-495B		METER,TEMP.-OIL			
FD01-55-491	1				
75-139A		BULB			
B456-55-431	6	12V 3W			

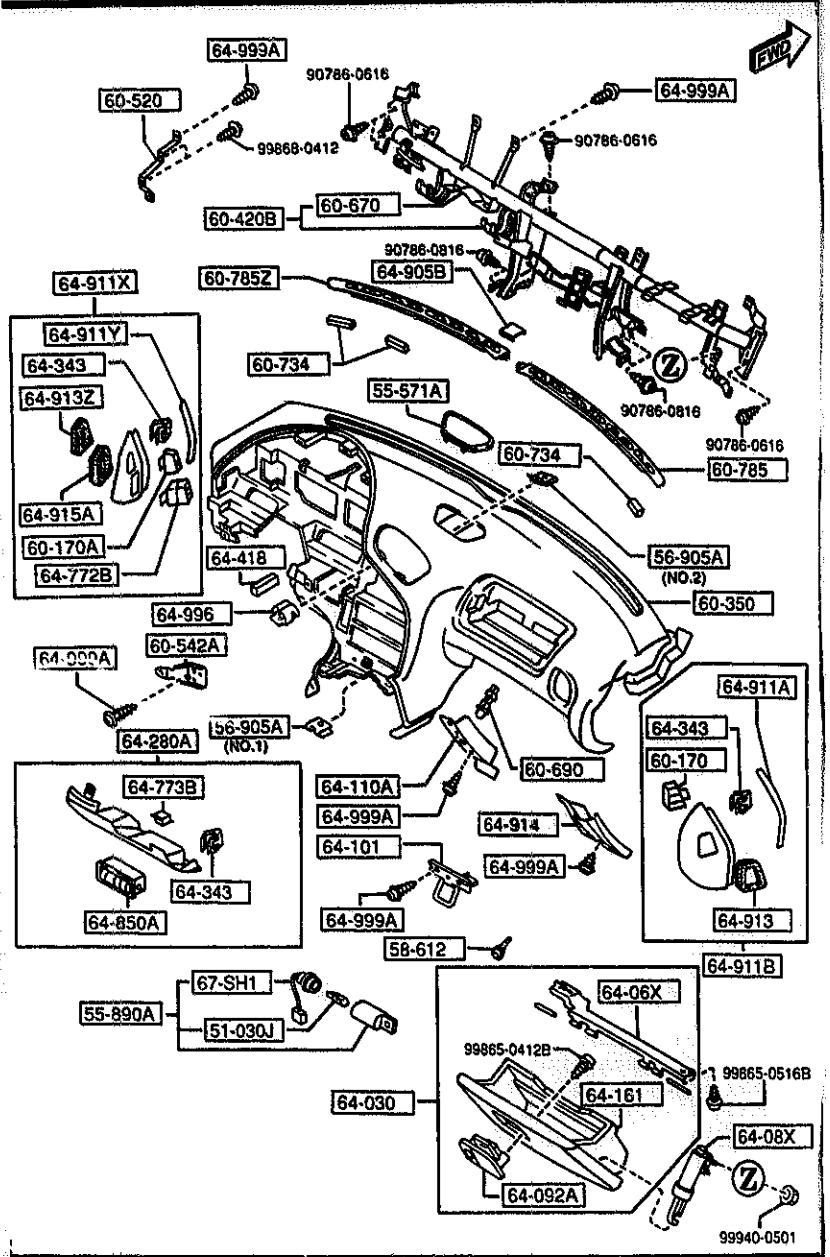

AUFA06

5560 -1 DASHBOARD & RELATED PARTS

PART NO.	QTY	MODEL/RESTRICTION	MODEL/RESTRICTION	MODEL/RESTRICTION	FROM-TO
51-030J		BULB			
3625-75-139	1	12V 1.4W			
55-571A		GRILLE,SPEAKER			
FD01-55-530A	1				
00	INT-	FE5 FE6 FE7 BLACK			
55-890A		LAMP,GLOVE BOX			
FD15-64-170A	1				
56-905A		NUT,SPRING			
B092-60-408	8	(ILLUST. NO.1)			
E016-60-408	3	(ILLUST. NO.2)			-4A03
E016-60-408	2	(ILLUST. NO.2)			4A03-
58-612		CUSHION,RUBBER			
B092-64-046	2				
60-170		NOZZLE(R),SIDE-DEMISTER			
FD01-60-182	1				
60-170A		NOZZLE(L),SIDE-DEMISTER			
FD01-60-192	1				
60-350		PAD,CRASH			
FD15-60-350D	1				
02	INT-	FE5 FE6 FE7 BLACK			
60-420B		MEMBER,CRASH PAD			
FD15-60-420G	1				
60-520		BRACKET,CENTER			
FD01-60-534	1				
60-542A		BRACKET,CENTER PANEL			
FD01-60-582	1				
60-670		BRACKET,STEERING			
FD01-60-670	1				

4A03 FD333 -400014

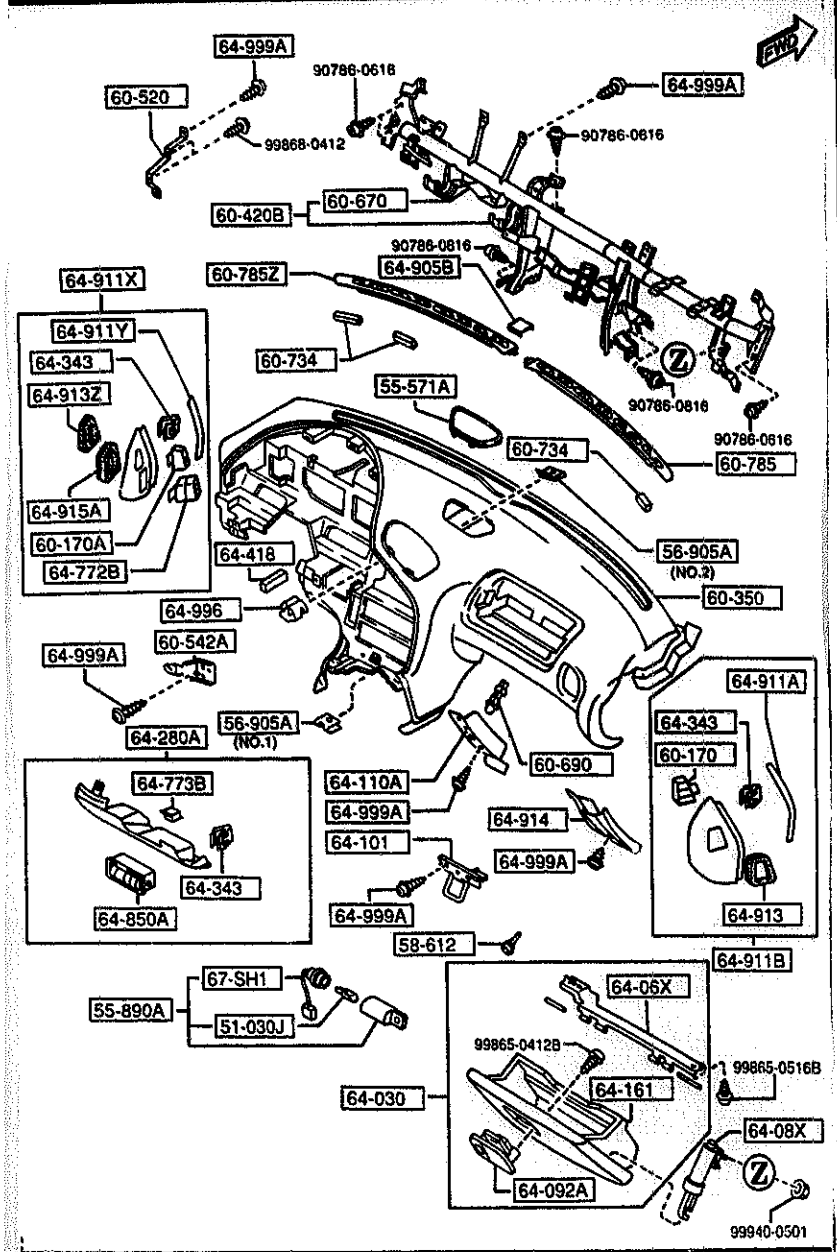

AUFA06

PART NO.	QTY	MODEL/RESTRICTION	MODEL/RESTRICTION	MODEL/RESTRICTION	FROM-TO
60-690		SWITCH,GLOVE TRAY			
J002-66-540A	1				
60-734		PAD NO.1,GARNISH-UPPER			
FD01-60-734A	3				
60-785		GRILLE(R),DEF.NOZZLE			
FD01-60-780	1				
02	INT-	FE5 FE6 FE7 BLACK			
60-785Z		GRILLE(L),DEF.NOZZLE			
FD01-60-790	1				
02	INT-	FE5 FE6 FE7 BLACK			
64-030		BOX,GLOVE			
FD15-64-030F	1				-4A01
02	INT-	FE5 FE6 FE7 BLACK			
FD15-64-030G	1				4A01-
02	INT-	FE5 FE6 FE7 BLACK			
64-06X		HINGE,GLOVE LID			
FD15-64-071A	1				
64-08X		DAMPER,GLOVE BOX			
FD15-64-08XB	1				
64-092A		LOCK,GLOVE LID			
BC5E-64-090B	1				
00	INT-	FE5 FE6 FE7 BLACK			
64-101		STRIKER			
FD15-64-10XC	1				
64-110A		COVER(R),GLOVE			
FD15-64-117A	1				
64-161		BOX,GLOVE			
FD15-64-161C	1				

4A01 FD333 -400014

5560 DASHBOARD & RELATED PARTS

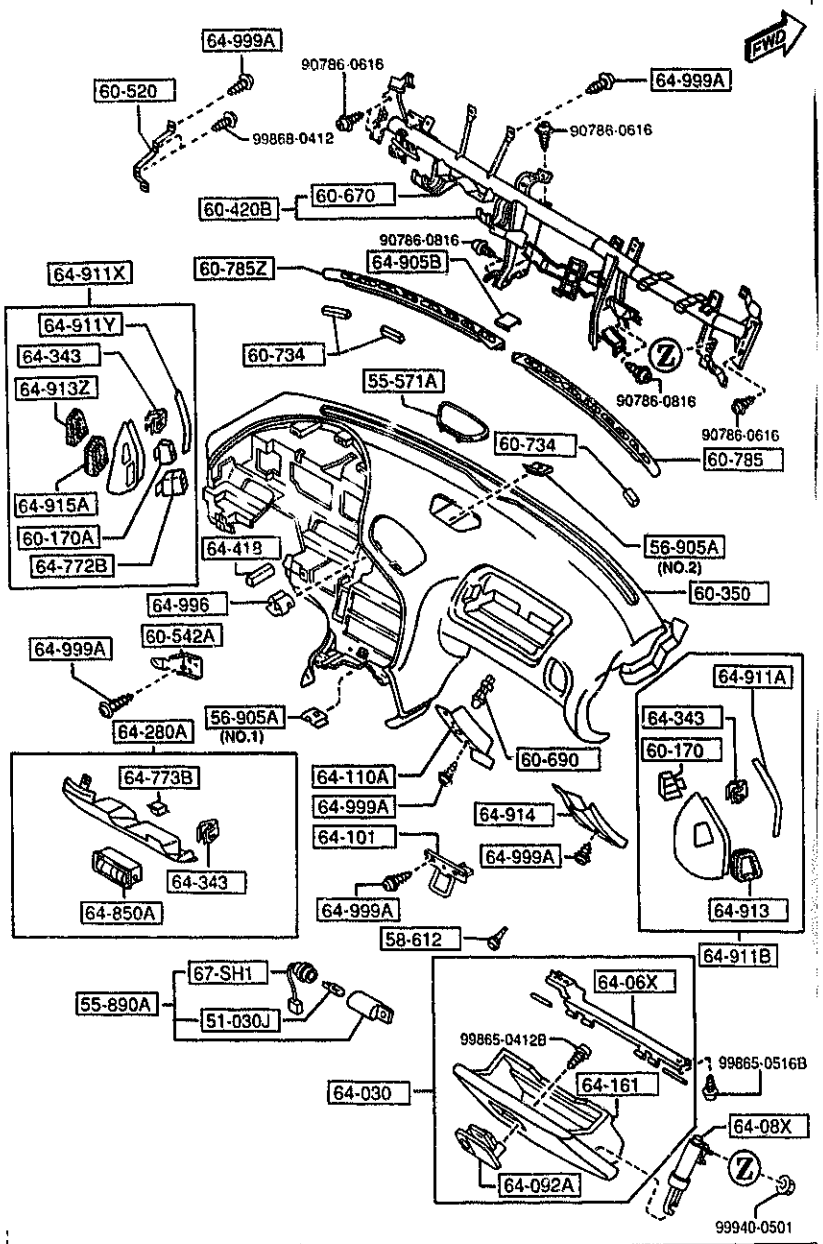

PART NO.	QTY	MODEL/RESTRICTION	MODEL/RESTRICTION	MODEL/RESTRICTION	FROM-TO
64-280A		PANEL,LOWER			
FD01-64-280C	1				
02	INT-	FE5 FE6 FE7 BLACK			
64-343		SPRING			
H260-64-343	7				
64-418		PAD			
FD01-60-737	1				
64-772B		DUCT NO.2(L)			
FD01-64-842	1				
64-773B		SPRING			
B455-64-773	2				
64-850A		LOUVER,LAP-LOWER PAN EL			
FB01-64-850	1				
64-905B		COVER,HOLE-(C)			
FD01-64-905	1				
02	INT-	FE5 FE6 FE7 BLACK			
64-911A		COVER(R),SIDE			
FD01-64-981	1				
02	INT-	FE5 FE6 FE7 BLACK			
64-911B		PANEL(R),SIDE-CRASH PAD			
FD15-64-910	1				
02	INT-	FE5 FE6 FE7 BLACK			
64-911X		PANEL(L),SIDE-CRASH PAD			
FD01-64-920B	1				
02	INT-	FE5 FE6 FE7 BLACK			
64-911Y		COVER(L),SIDE			
FD01-64-971	1				
02	INT-	FE5 FE6 FE7 BLACK			

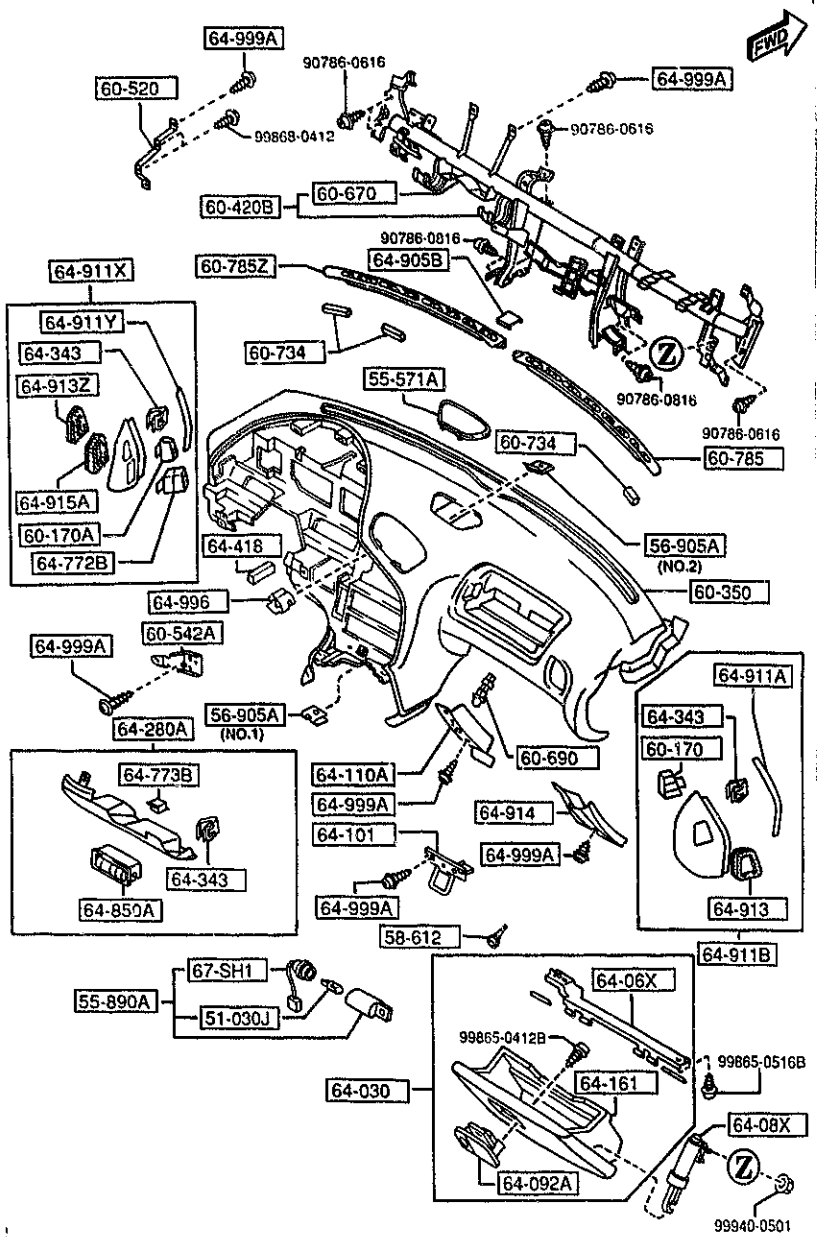

PART NO.	QTY	MODEL/RESTRICTION	MODEL/RESTRICTION	MODEL/RESTRICTION	FROM-TO
64-913		RUBBER(R),SEAL-SIDE PANEL			
FD01-64-912	1				
64-913Z		RUBBER(L),SEAL-SIDE PANEL			
FD01-64-922	1				
64-914		COVER(R),SIDE NO.2			
FD15-64-914B	1				
02	INT-	FE5 FE6 FE7 BLACK			
64-915A		RUBBER,SEAL-SIDE PAN EL			
FD01-64-923	1				
64-996		NUT,EXPANSION			
GJ21-64-996	2				
64-999A		SCREW,TAPPING			
W201-64-999	22				
67-SH1		CORD,SHORT			
FD17-67-SH0	1				

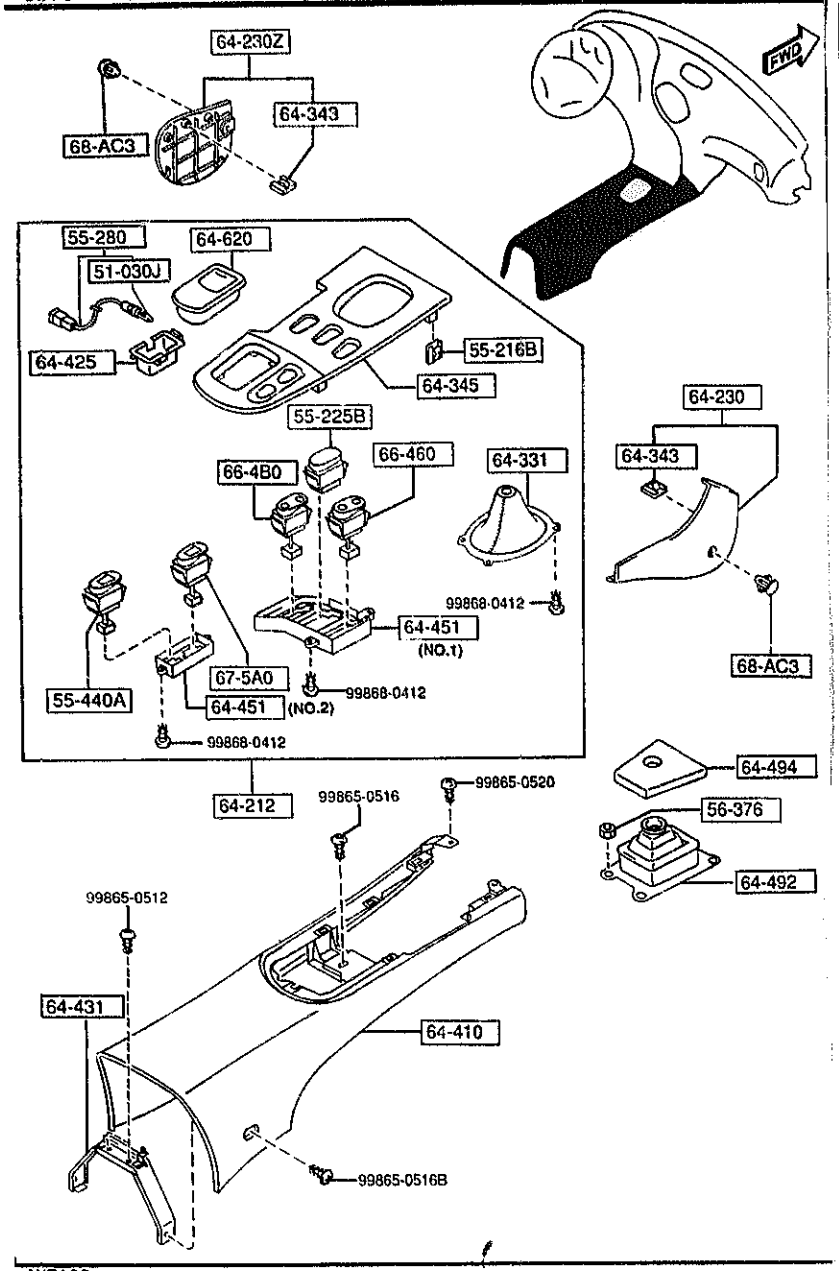

PART NO.	QTY	MODEL/RESTRICTION	MODEL/RESTRICTION	MODEL/RESTRICTION	FROM-TO
+---------+		BULB			
| 51-030J |					
+---------+					
3625-75-139	1	12V 1.4W			
+---------+		SPRING,CENTER PANEL			
| 55-216B |					
+---------+					
B092-55-257	5				
+---------+		COVER,HOLE			
| 55-225B |					
+---------+					
FD01-55-225A	1	(W/O HEAD LAMP CLEAN ER) (W/STEEL SUN ROOF) (W/GLASS SUN ROOF)			
00	INT-	FE5 FE6 FE7 BLACK			
FD01-55-225A	2	(W/O HEAD LAMP CLEAN ER) (W/O SUN ROOF)			
00	INT-	FE5 FE6 FE7 BLACK			
+---------+		BULB & SOCKET			
| 55-280 |					
+---------+					
FD01-55-280	1				
+---------+		WARNING,HEAT			
| 55-440A |					
+---------+					
FD01-67-5H0C	1				
+---------+		NUT,SELF LOCK			
| 56-376 |					
+---------+					
B001-56-376	4	(MT)			
+---------+		PANEL,CONSOLE			
| 64-212 |					
+---------+					
FD15-64-470	1	(W/O HEAD LAMP CLEAN ER) ((MT)>(W/O SUN ROOF))			
00	INT-	FE5 FE6 FE7 BLACK			
FD17-64-470	1	(W/O HEAD LAMP CLEAN ER) ((AT)>(W/O SUN ROOF))			
00	INT-	FE5 FE6 FE7 BLACK			
FD18-64-470	1	(W/O HEAD LAMP CLEAN ER) ((MT)>(W/STEEL SUN R OOF)) ((MT)>(W/GLASS SUN R OOF))			
00	INT-	FE5 FE6 FE7 BLACK			
FD19-64-470	1	(W/O HEAD LAMP CLEAN			

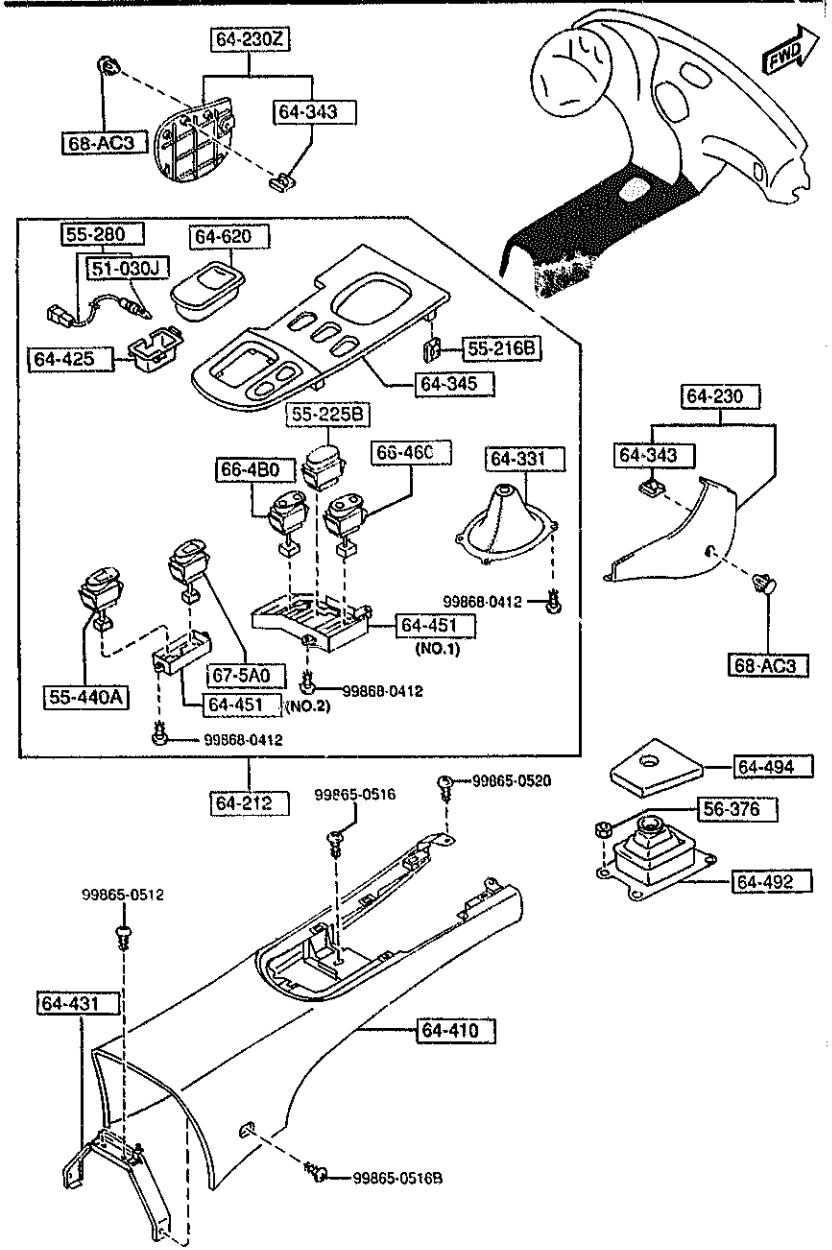

PART NO.	QTY	MODEL/RESTRICTION	MODEL/RESTRICTION	MODEL/RESTRICTION	FROM-TO
CONT'D		ER) ((AT)>(W/GLASS SUN ROOF))			
00 INT-		FE5 FE6 FE7 BLACK			
+---------+ | 64-230 | +---------+		WALL(R),SIDE			
FD15-64-220A	1				
02 INT-		FE5 FE6 FE7 BLACK			
+---------+ | 64-230Z | +---------+		WALL(L),SIDE			
FD01-64-240A	1				
02 INT-		FE5 FE6 FE7 BLACK			
+---------+ | 64-331 | +---------+		BOOT,CHANGE			
FD01-64-330C	1	(MT)			
00 INT-		FE5 FE6 FE7 BLACK			
+---------+ | 64-343 | +---------+		SPRING			
H260-64-343	3				
+---------+ | 64-345 | +---------+		PANEL,SWITCH			
FD15-64-471	1	(MT)			
FD17-64-471	1	(AT)			
+---------+ | 64-410 | +---------+		CONSOLE,REAR			
FD01-64-420E	1				
02 INT-		FE5 FE6 FE7 BLACK			
+---------+ | 64-425 | +---------+		CASE,LAMP			
FD01-64-414A	1				
+---------+ | 64-431 | +---------+		BRACKET,RR.CONSOLE-NO.1			
FD15-64-43XA	1				
+---------+ | 64-451 | +---------+		PANEL,SWITCH			
FD01-66-468	1	(ILLUST. NO.1)			
FD02-66-468	1	(ILLUST. NO.2)			
+---------+ | 64-492 | +---------+		INSULATOR,BOOT			
FD01-64-490A	1	(MT)			

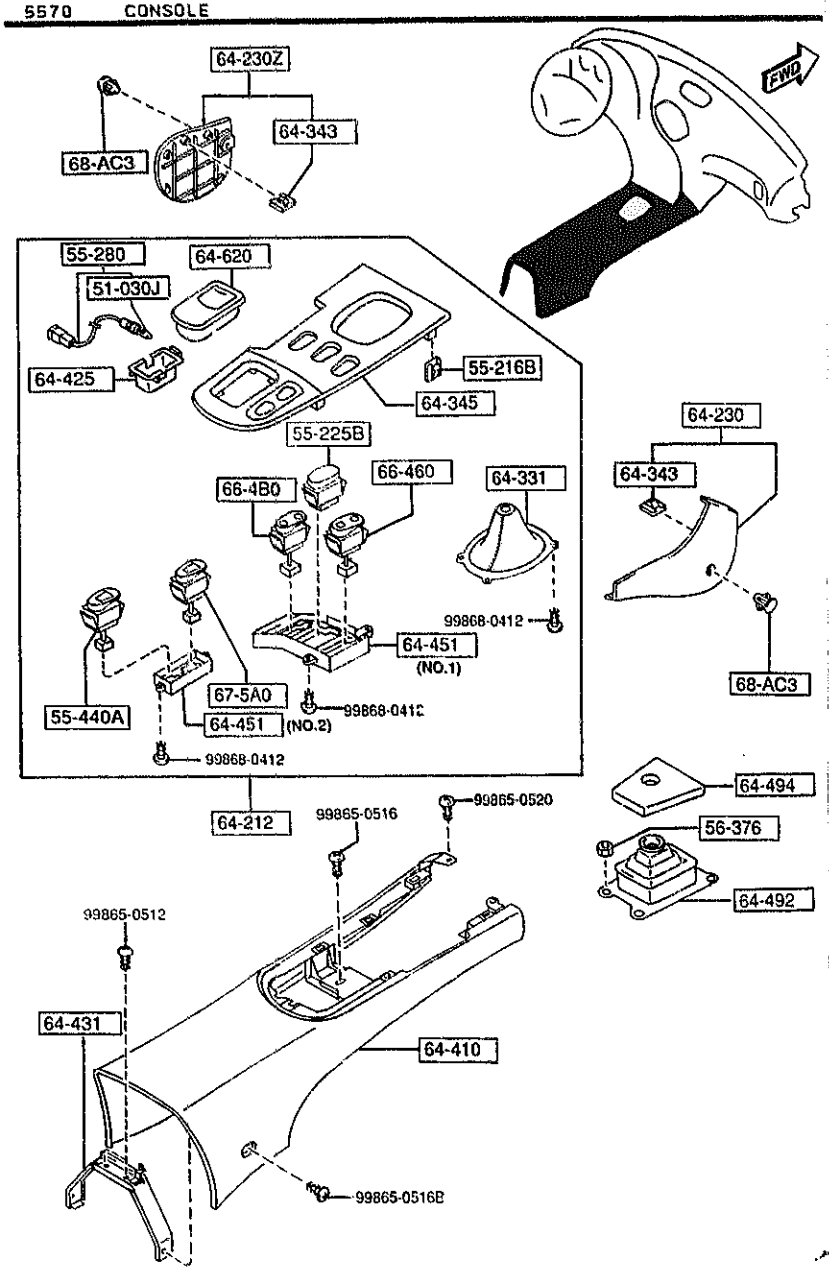

PART NO.	QTY	MODEL/RESTRICTION	MODEL/RESTRICTION	MODEL/RESTRICTION	FROM-TO
64-494		PAD,CHANGE BOOT			
FB01-64-495	1	(MT)			
64-620		TRAY,ASH			
FD01-64-610A	1				
00	INT-	FE5 FE6 FE7 BLACK			
66-4B0		SWITCH,FOG-FRONT			
FD01-66-4B0A	1	(W/O HEAD LAMP CLEANER) (W/STEEL SUN ROOF) (W/GLASS SUN ROOF)			
66-460		SWITCH,RR.DEF.			
FD01-66-460A	1				
67-5A0		DISPLAY,SECURITY-ALARM			
FD01-67-5A0C	1				
68-AC3		FASTENER			
B467-68-AC3	2				
02	INT-	FE5 FE6 FE7 BLACK			

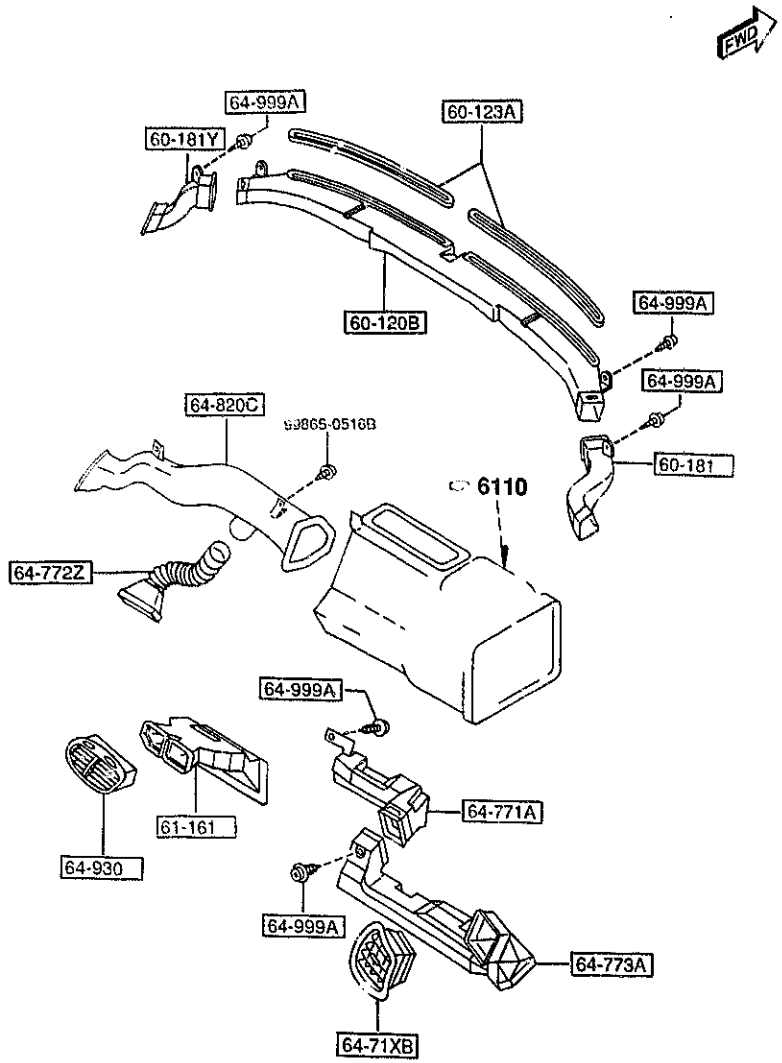

PART NO.	QTY	MODEL/RESTRICTION	MODEL/RESTRICTION	MODEL/RESTRICTION	FROM-TO
60-120B FD01-60-120	1	NOZZLE,DEFROSTER			
60-123A FD01-60-123	2	TAPE,SOFT-DEF.NOZZLE			
60-181 FD01-60-181	1	HOSE,SIDE-DEMISTER			
60-181V FD01-60-191	1	DUCT(L),SIDE DEMIST.			
61-161 FD01-61-160B	1	DUCT,CENTER			
64-71XB FD15-64-81XA	1	LOUVER(R),VENT.GRILL E			
02	INT-	FE5 FE6 FE7 BLACK			
64-771A FD15-64-741	1	DUCT NO.1(R)			
64-772Z FD01-64-772B	1	DUCT(L),LAP			
64-773A FD15-64-743B	1	DUCT NO.3(R)			
64-820C FD01-64-84XA	1	DUCT(L),VENTILATOR			
64-930 FD01-64-930A	1	GRILLE(C),VENTILATOR			
02	INT-	FE5 FE6 FE7 BLACK			
64-999A W201-64-999	6	SCREW,TAPPING			

SEAT TYPES / GRADE / SPECIFICATIONS	STA TYPE	STC TYPE	STD TYPE
	BASE	R3, R2	OPT-PKG. TOURING
SEAT TRIM	CLOTH"A"	CLOTH"C"	LEATHER

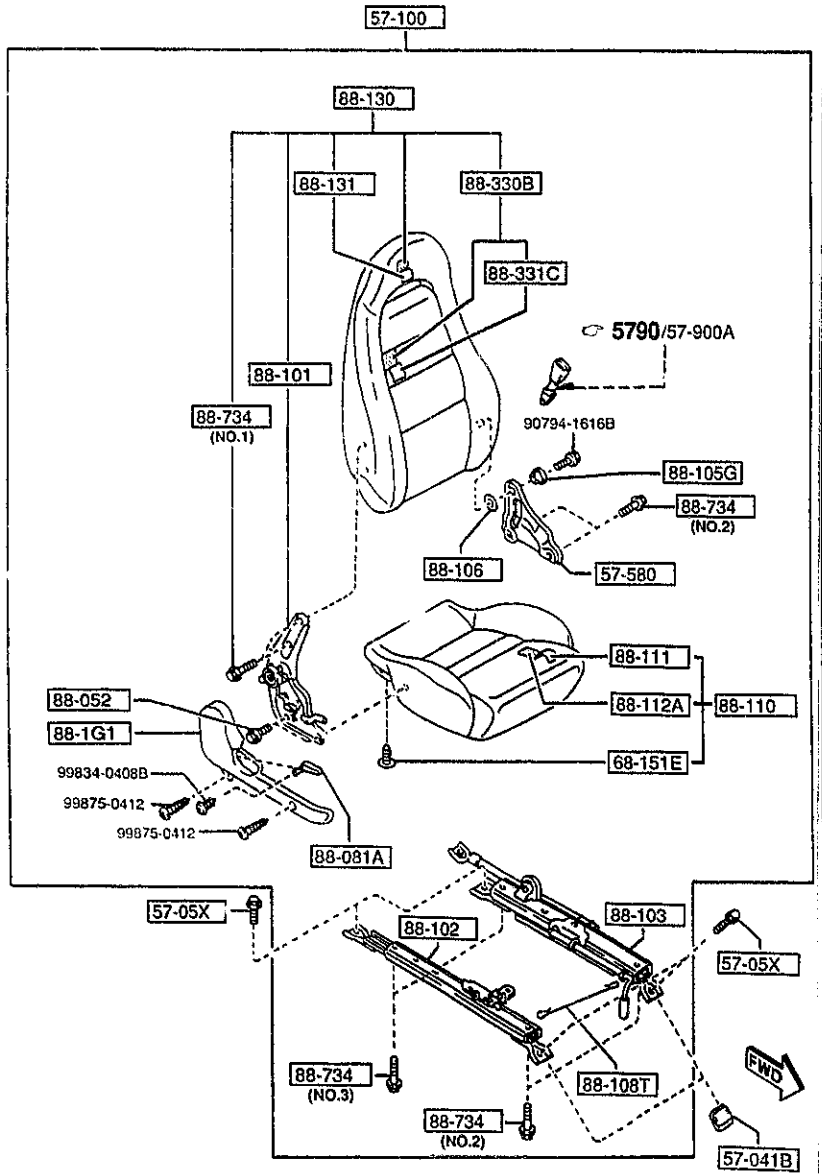

AUFA06

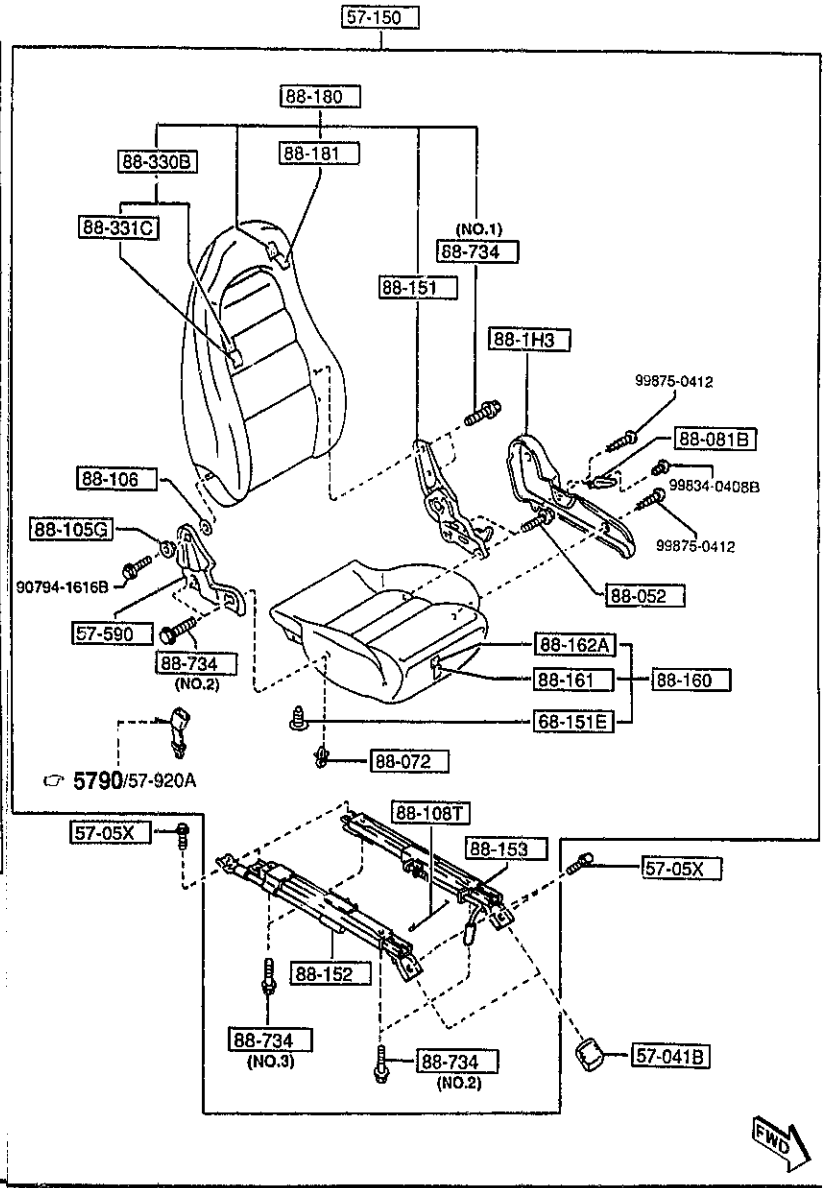

AUFA06

5700 FRONT SEATS (2/3)

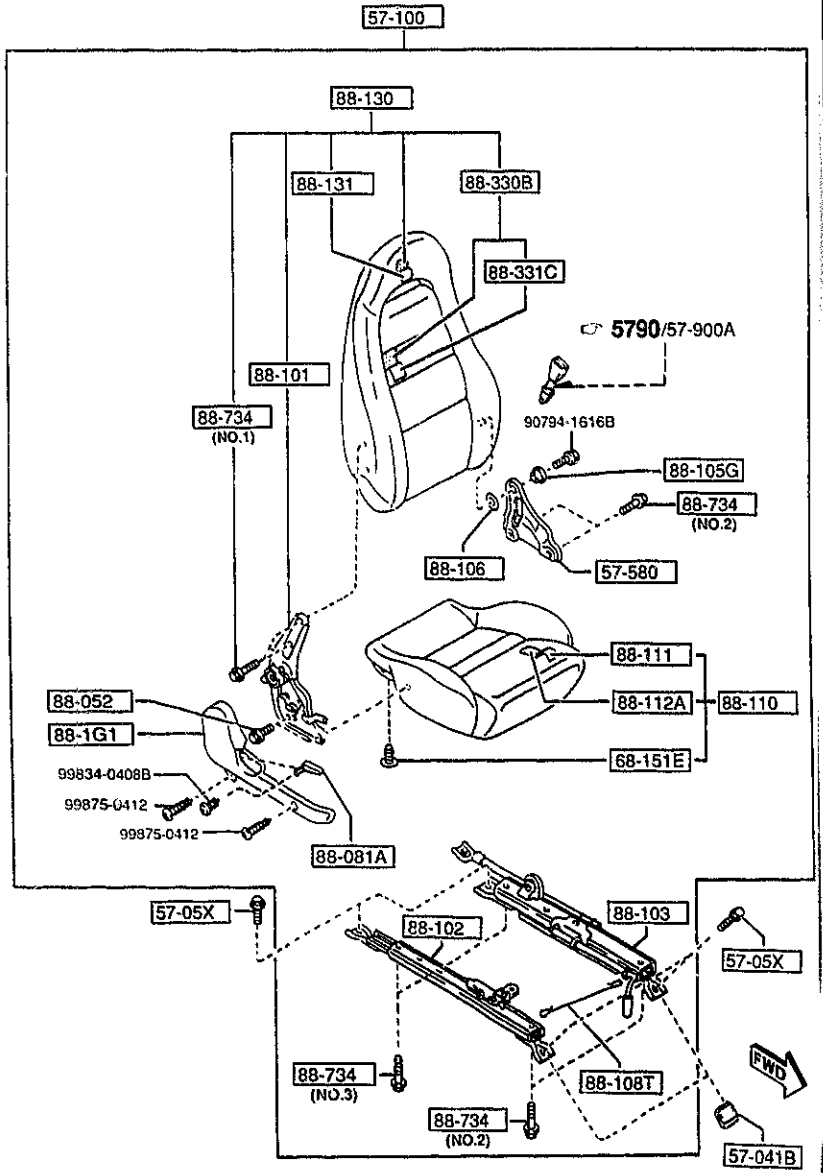

PART NO.	QTY	MODEL/RESTRICTION	MODEL/RESTRICTION	MODEL/RESTRICTION	FROM-TO
57-041B		COVER NO.1,ADJ-FRT			
J001-57-041	4				
02	INT-	FE5 BLACK			
17	INT-	FE7 RED			
33	INT-	FE6 TAN			
57-05X		BOLT,LINK			
B455-57-05XA	8				
57-100		SEAT(R),FRONT			
FD19-57-100A	1	R2, R3, (STC TYPE)			-4B01
02	INT-	FE5 BLACK			
FD15-57-100A	1	BASE, (STA TYPE)			-5301
02	INT-	FE5 BLACK			
FD18-57-100	1	OPT-PKG, TOURING, (STD TYPE)			-5301
02	INT-	FE5 BLACK			
18	INT-	FE7 RED			
34	INT-	FE6 TAN			
FD19-57-100B	1	R2, R3, (STC TYPE)			4B01-5301
02	INT-	FE5 BLACK			
FD15-57-100C	1	BASE, (STA TYPE)			5301-
02	INT-	FE5 BLACK			
FD18-57-100B	1	OPT-PKG, TOURING, (STD TYPE)			5301-
02	INT-	FE5 BLACK			
18	INT-	FE7 RED			
34	INT-	FE6 TAN			
FD19-57-100D	1	R2, R3, (STC TYPE)			5301-
02	INT-	FE5 BLACK			
57-150		SEAT(L),FRONT			
FD03-57-150D	1	R2, R3, (STC TYPE)			-4B01
02	INT-	FE5 BLACK			

4B01 FD333 -400022
5301 FD333 -400027

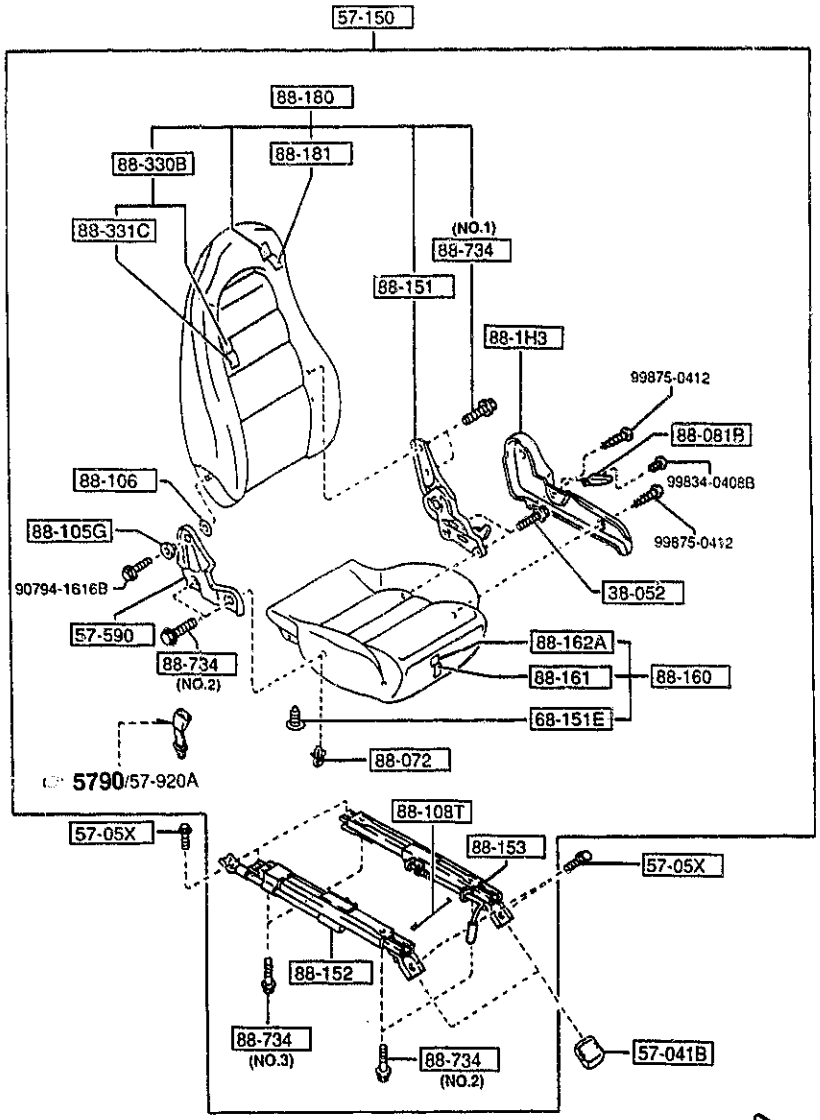

PART NO.	QTY	MODEL/RESTRICTION	MODEL/RESTRICTION	MODEL/RESTRICTION	FROM-TO
CONT'D					
FD01-57-150D	1	BASE, (STA TYPE)			-5301
02	INT-	FE5 BLACK			
FD05-57-150D	1	OPT-PKG, TOURING, (STD TYPE)			-5301
02	INT-	FE5 BLACK			
18	INT-	FE7 RED			
34	INT-	FE6 TAN			
FD03-57-150E	1	R2, R3, (STC TYPE)			4B01-5301
02	INT-	FE5 BLACK			
FD01-57-150F	1	BASE, (STA TYPE)			5301-
02	INT-	FE5 BLACK			
FD03-57-150G	1	R2, R3, (STC TYPE)			5301-
02	INT-	FE5 BLACK			
FD05-57-150F	1	OPT-PKG, TOURING, (STD TYPE)			5301-
02	INT-	FE5 BLACK			
18	INT-	FE7 RED			
34	INT-	FE6 TAN			
+---+ 57-580 +---+		BRACKET(R),FRT SEAT			
FD01-88-124	1				
+---+ 57-590 +---+		BRACKET(L),FRT SEAT			
FD01-88-174	1				
+---+ 68-151E +---+		CLIP			
8102-68-865	10				
00	INT-	FE5 FE6 FE7 BLACK			
+---+ 88-052 +---+		BOLT			
FD01-88-062	4				
+---+ 88-072 +---+		CLIP			
FD01-88-072	2				
+---+ 88-081A +---+		KNOB(R),KNUCKLE			

4B01 FD333 -400022
5301 FD333 -400027

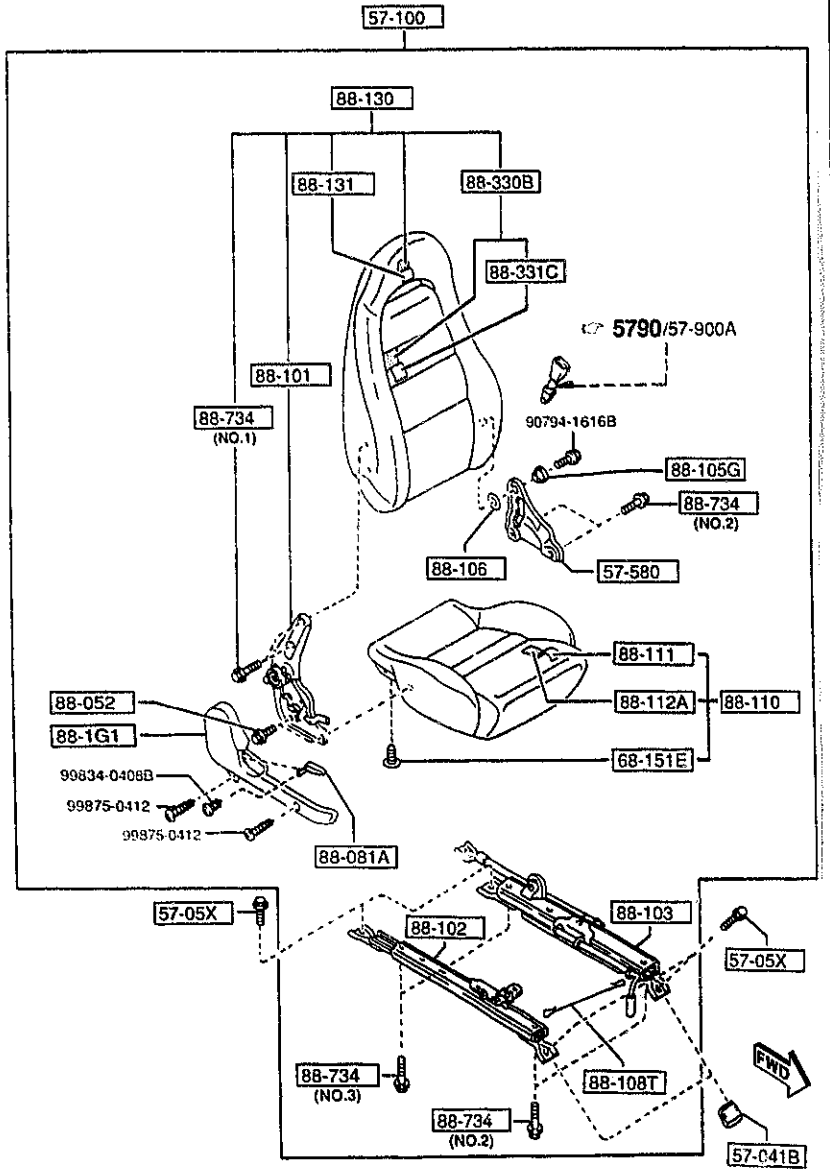

PART NO.	QTY	MODEL/RESTRICTION	MODEL/RESTRICTION	MODEL/RESTRICTION	FROM-TO
CONT'D					
FD01-88-1G5	1				
02 INT-		FE5 BLACK			
17 INT-		FE7 RED			
33 INT-		FE6 TAN			
88-081B		KNOB(L),KNUCKLE			
FD01-88-1H5	1				
02 INT-		FE5 BLACK			
17 INT-		FE7 RED			
33 INT-		FE6 TAN			
88-1G1		COVER NO.1,SIDE-F.SEAT			
FD01-88-1G1	1				
02 INT-		FE5 BLACK			
17 INT-		FE7 RED			
33 INT-		FE6 TAN			
88-1H3		COVER NO.4,SIDE-F.SEAT			
FD01-88-1H3	1				
02 INT-		FE5 BLACK			
17 INT-		FE7 RED			
33 INT-		FE6 TAN			
88-101		KNUCKLE(R),RECLINING			
FD01-88-101	1				
88-102		ADJUSTER,NO.1			
FD01-88-102	1				
88-103		ADJUSTER,NO.2			
FD11-88-103	1				
88-105G		BUSH,HINGE			
FD01-88-005	2				
88-106		WASHER			
FD01-88-006	2				

5700 FRONT SEATS (3/3)

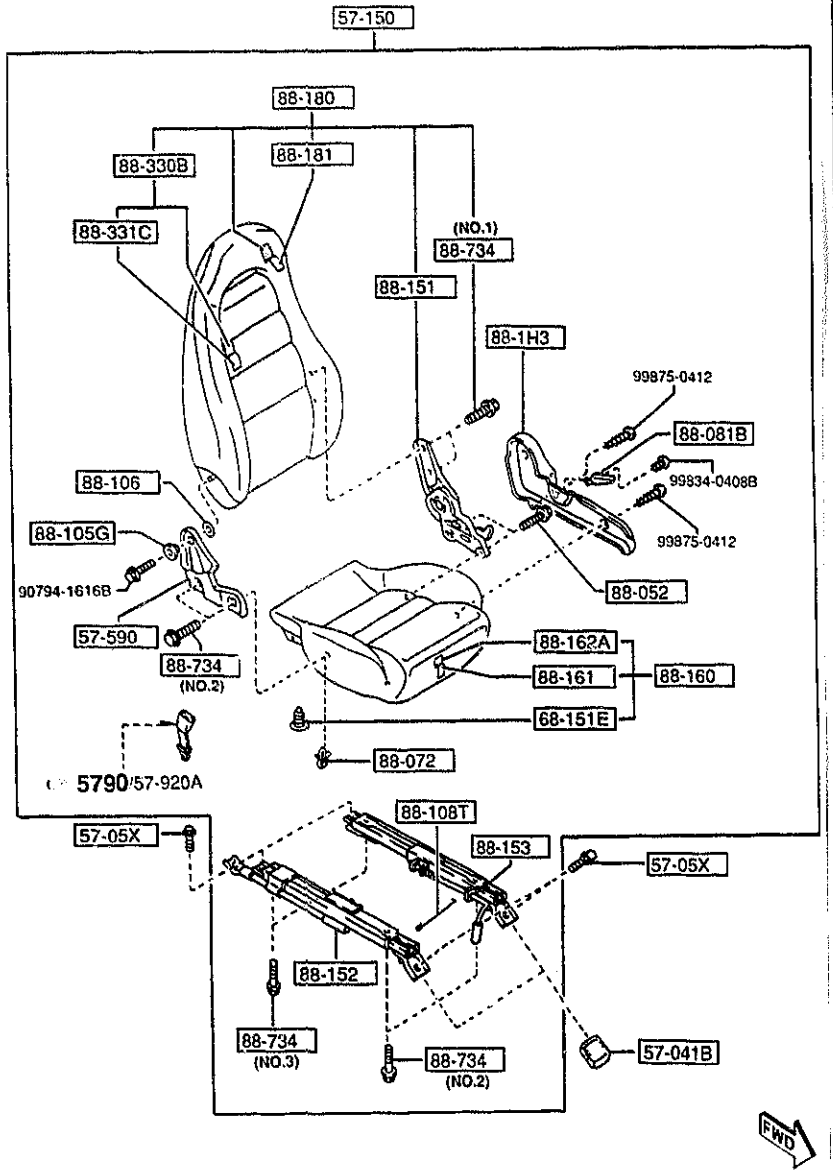

PART NO.	QTY	MODEL/RESTRICTION	MODEL/RESTRICTION	MODEL/RESTRICTION	FROM-TO
88-108T		WIRE,RELEASE			
FD01-88-106	2				
88-110		CUSHION(R),FRT SEAT			
F110-88-110	1	R2, R3, (STC TYPE)			-4B01
02	INT-	FE5 BLACK			
FD15-88-110	1	BASE, (STA TYPE)			-5301
02	INT-	FE5 BLACK			
FD18-88-110	1	OPT-PKG, TOURING, (STD TYPE)			-5301
02	INT-	FE5 BLACK			
18	INT-	FE7 RED			
34	INT-	FE6 TAN			
F110-88-110A	1	R2, R3, (STC TYPE)			4B01-5301
02	INT-	FE5 BLACK			
FD15-88-110A	1	BASE, (STA TYPE)			5301-
02	INT-	FE5 BLACK			
FD18-88-110A	1	OPT-PKG, TOURING, (STD TYPE)			5301-
02	INT-	FE5 BLACK			
18	INT-	FE7 RED			
34	INT-	FE6 TAN			
F110-88-110B	1	R2, R3, (STC TYPE)			5301-
02	INT-	FE5 BLACK			
88-111		TRIM(R),SEAT CUSHION			
FD03-88-111	1	R2, R3, (STC TYPE)			-4B01
02	INT-	FE5 BLACK			
FD01-88-111	1	BASE, (STA TYPE)			-5301
02	INT-	FE5 BLACK			
FD05-88-111	1	OPT-PKG, TOURING, (STD TYPE)			-5301
02	INT-	FE5 BLACK			

4B01 FD333 -400022
5301 FD333 -400027

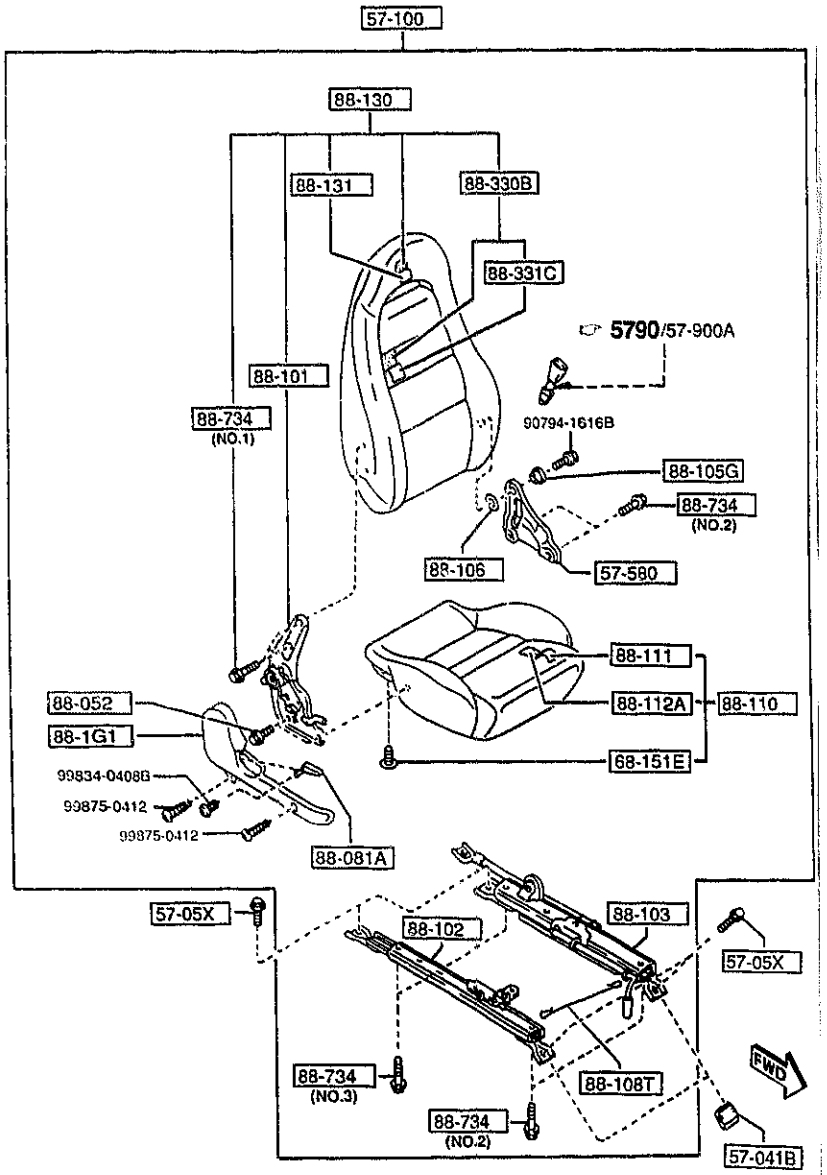

PART NO.	QTY	MODEL/RESTRICTION	MODEL/RESTRICTION	MODEL/RESTRICTION	FROM-TO
CONT'D					
18 INT-		FE7 RED			
34 INT-		FE6 TAN			
FD03-88-111A	1	R2, R3, (STC TYPE)			4B01-5301
02 INT-		FE5 BLACK			
FD01-88-111A	1	BASE, (STA TYPE)			5301-
02		BLACK			
FD03-88-111B	1	R2, R3, (STC TYPE)			5301-
02 INT-		FE5 BLACK			
FD05-88-111A	1	OPT-PKG, TOURING, (STD TYPE)			5301-
02 INT-		FE5 BLACK			
18 INT-		FE7 RED			
34 INT-		FE6 TAN			
+---------+ | 88-112A | +---------+		PAD(R),CUSHION-FRT			
FD15-88-112	1				
+---------+ | 88-130 | +---------+		BACK(R),FRONT SEAT			
FD19-88-130A	1	R2, R3, (STC TYPE)			-4B01
02 INT-		FE5 BLACK			
FD15-88-130A	1	BASE, (STA TYPE)			-5301
02 INT-		FE5 BLACK			
FD18-88-130	1	OPT-PKG, TOURING, (STD TYPE)			-5301
02 INT-		FE5 BLACK			
18 INT-		FE7 RED			
34 INT-		FE6 TAN			
FD19-88-130B	1	R2, R3, (STC TYPE)			4B01-5301
02 INT-		FE5 BLACK			
FD15-88-130C	1	BASE, (STA TYPE)			5301-
02 INT-		FE5 BLACK			
FD18-88-130B	1	OPT-PKG, TOURING, (STD TYPE)			5301-

4B01 FD333 -400022
5301 FD333 -400027

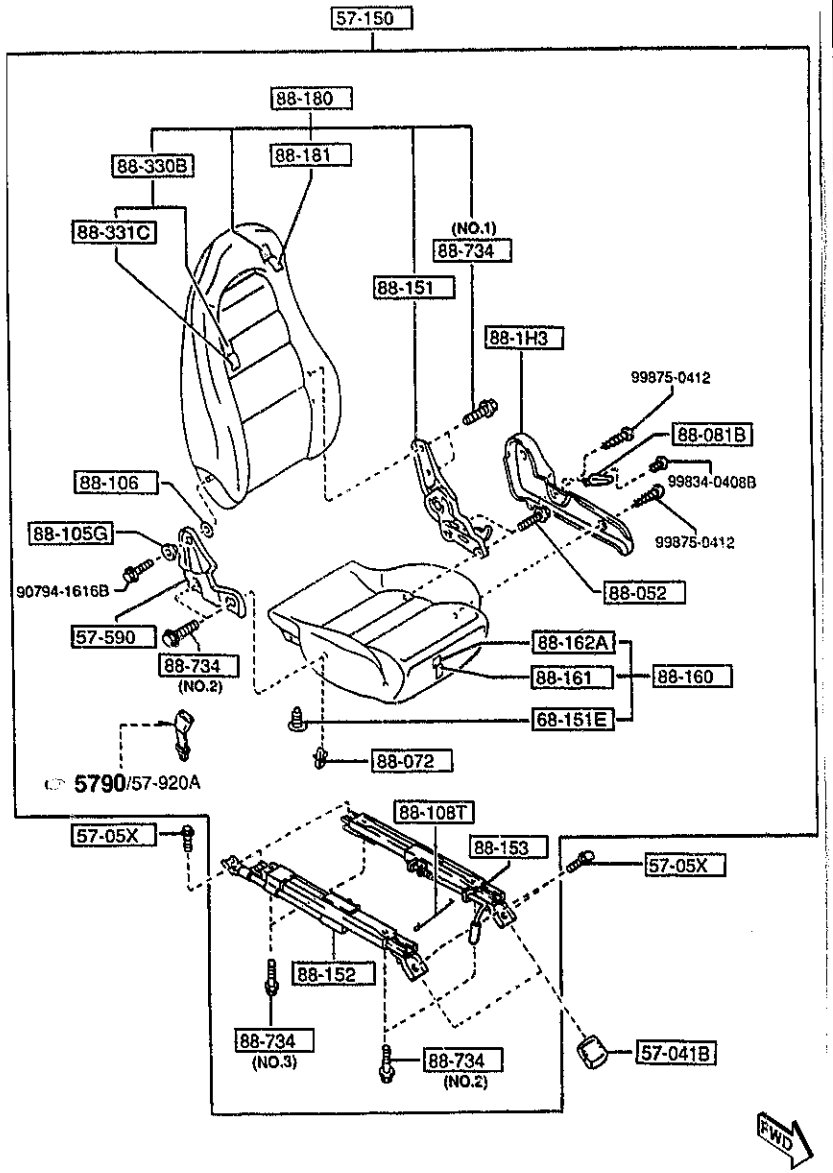

PART NO.	QTY	MODEL/RESTRICTION	MODEL/RESTRICTION	MODEL/RESTRICTION	FROM-TO
CONT'D					
02	INT-	FE5 BLACK			
18	INT-	FE7 RED			
34	INT-	FE6 TAN			
FD19-88-130D	1	R2, R3, (STC TYPE)			5301-
02	INT-	FE5 BLACK			
+---------+ | 88-131 | +---------+		TRIM(R),SEAT BACK			
FD15-88-131	1	BASE, (STA TYPE)			-5301
02	INT-	FE5 BLACK			
FD18-88-131	1	OPT-PKG, TOURING, (STD TYPE)			-5301
02	INT-	FE5 BLACK			
18	INT-	FE7 RED			
34	INT-	FE6 TAN			
FD19-88-131	1	R2, R3, (STC TYPE)			-5301
02	INT-	FE5 BLACK			
FD15-88-131A	1	BASE, (STA TYPE)			5301-
02	INT-	FE5 BLACK			
FD18-88-131A	1	OPT-PKG, TOURING, (STD TYPE)			5301-
02	INT-	FE5 BLACK			
18	INT-	FE7 RED			
34	INT-	FE6 TAN			
FD19-88-131A	1	R2, R3, (STC TYPE)			5301-
02	INT-	FE5 BLACK			
+---------+ | 88-151 | +---------+		KNUCKLE(L),RECLINING			
FD01-88-155	1				
+---------+ | 88-152 | +---------+		ADJUSTER NO.3			
FD01-88-152	1				
+---------+ | 88-153 | +---------+		ADJUSTER NO.4			
FD01-88-153	1				

5301 FD333 -400027

5700 FRONT SEATS (2/3)

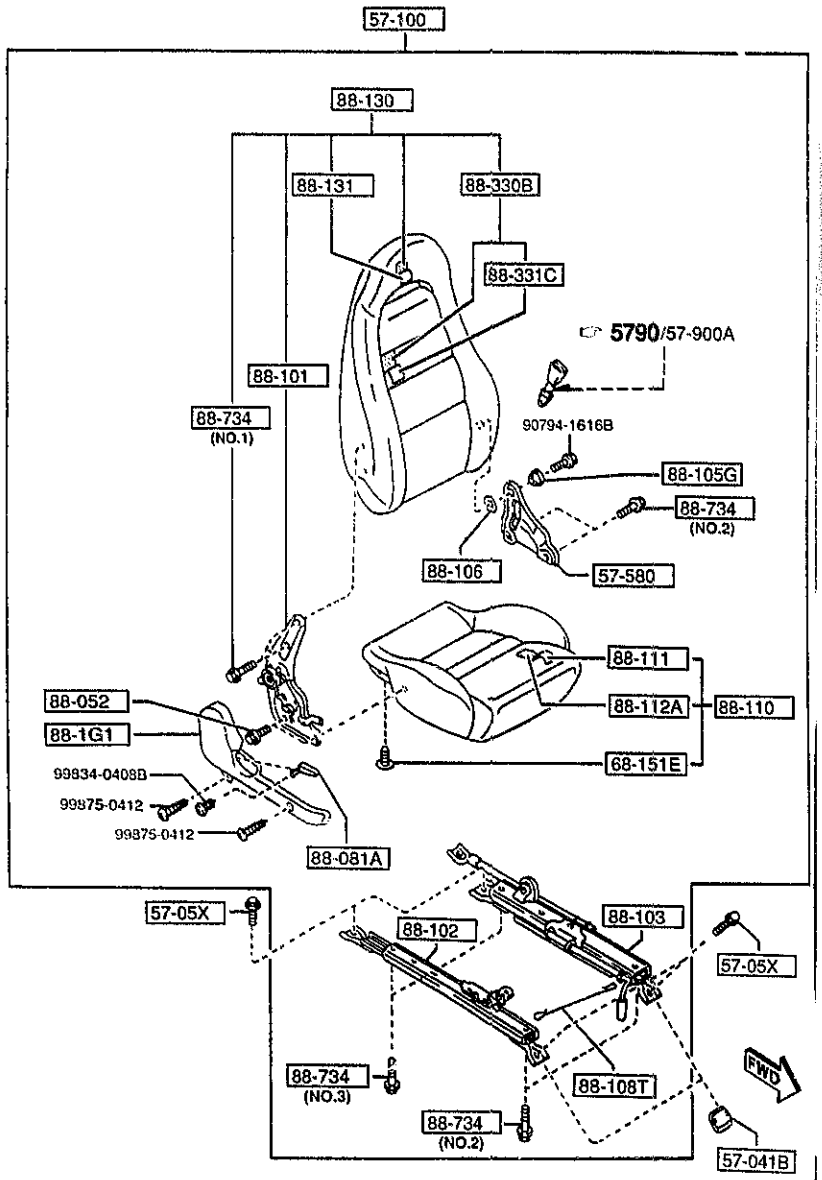

PART NO.	QTY	MODEL/RESTRICTION	MODEL/RESTRICTION	MODEL/RESTRICTION	FROM-TO
88-160		CUSHION(L),FRT SEAT			
FD03-88-160	1	R2, R3, (STC TYPE)			-4B01
02	INT-	FE5 BLACK			
FD01-88-160	1	BASE, (STA TYPE)			-5301
02	INT-	FE5 BLACK			
FD05-88-160	1	OPT-PKG, TOURING, (STD TYPE)			-5301
02	INT-	FE5 BLACK			
18	INT-	FE7 RED			
34	INT-	FE6 TAN			
FD03-88-160A	1	R2, R3, (STC TYPE)			4B01-5301
02	INT-	FE5 BLACK			
FD01-88-160A	1	BASE, (STA TYPE)			5301-
02	INT-	FE5 BLACK			
FD03-88-160B	1	R2, R3, (STC TYPE)			5301-
02	INT-	FE5 BLACK			
FD05-88-160A	1	OPT-PKG, TOURING, (STD TYPE)			5301-
02	INT-	FE5 BLACK			
18	INT-	FE7 RED			
34	INT-	FE6 TAN			
88-161		TRIM(L),SEAT CUSHION			
FD03-88-161	1	R2, R3, (STC TYPE)			-4B01
02	INT-	FE5 BLACK			
FD01-88-161	1	BASE, (STA TYPE)			-5301
02	INT-	FE5 BLACK			
FD05-88-161	1	OPT-PKG, TOURING, (STD TYPE)			-5301
02	INT-	FE5 BLACK			
18	INT-	FE7 RED			
34	INT-	FE6 TAN			
FD03-88-161A	1	R2, R3,			4B01-5301

4B01 FD333 -400022
5301 FD333 -400027

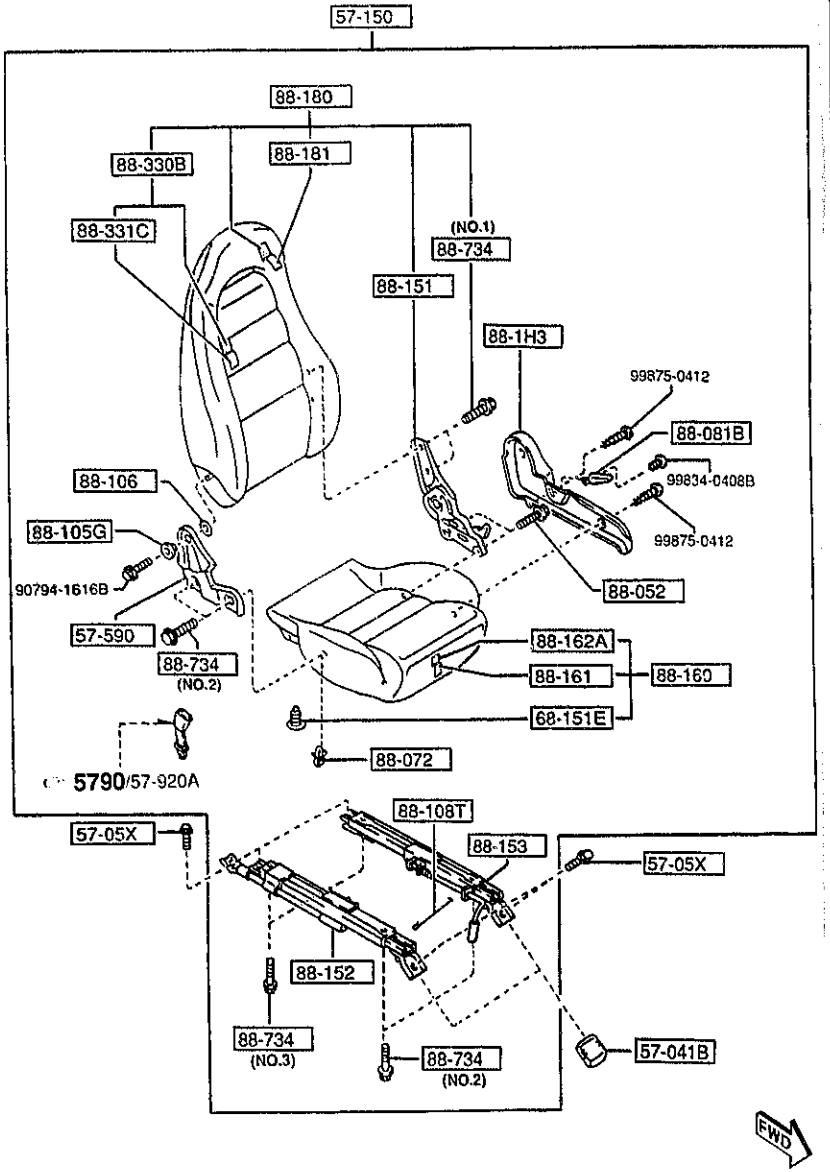

PART NO.	QTY	MODEL/RESTRICTION	MODEL/RESTRICTION	MODEL/RESTRICTION	FROM-TO
CONT'D					
		(STC TYPE)			
02	INT-	FE5 BLACK			
FD01-88-161A	1	BASE, (STA TYPE)			5301-
02	INT-	FE5 BLACK			
FD03-88-161B	1	R2, R3, (STC TYPE)			5301-
02	INT-	FE5 BLACK			
FD05-88-161A	1	OPT-PKG, TOURING, (STD TYPE)			5301-
02	INT-	FE5 BLACK			
18	INT-	FE7 RED			
34	INT-	FE6 TAN			
+---------+ | 88-162A | +---------+		PAD(L),CUSHION-FRT			
FD01-88-162	1				
+---------+ | 88-180 | +---------+		BACK(L),FRONT SEAT			
FD03-88-180A	1	R2, R3, (STC TYPE)			-4B01
02	INT-	FE5 BLACK			
FD01-88-180A	1	BASE, (STA TYPE)			-5301
02	INT-	FE5 BLACK			
FD05-88-180	1	OPT-PKG, TOURING, (STD TYPE)			-5301
02	INT-	FE5 BLACK			
18	INT-	FE7 RED			
34	INT-	FE6 TAN			
FD03-88-180B	1	R2, R3, (STC TYPE)			4B01-5301
02	INT-	FE5 BLACK			
FD01-88-180C	1	BASE, (STA TYPE)			5301-
02	INT-	FE5 BLACK			
FD03-88-180D	1	R2, R3, (STC TYPE)			5301-
02	INT-	FE5 BLACK			
FD05-88-180B	1	OPT-PKG, TOURING, (STD TYPE)			5301-

4B01 FD333 -400022
5301 FD333 -400027

5700 FRONT SEATS (2/3)

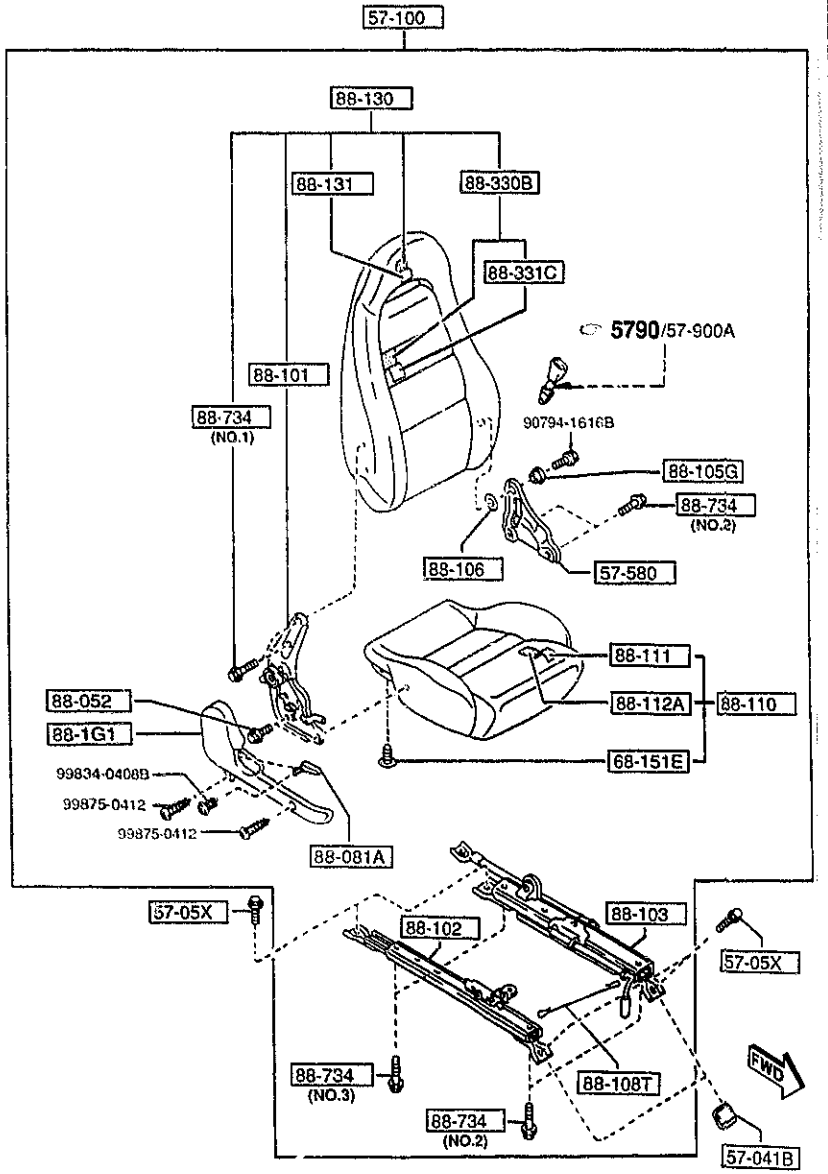

PART NO.	QTY	MODEL/RESTRICTION	MODEL/RESTRICTION	MODEL/RESTRICTION	FROM-TO
CONT'D					
02	INT-	FE5 BLACK			
18	INT-	FE7 RED			
34	INT-	FE6 TAN			
+----------+ | 88-181 | +----------+		TRIM(L),SEAT BACK			
FD01-88-181	1	BASE, (STA TYPE)			-5301
02	INT-	FE5 BLACK			
FD03-88-181	1	R2, R3, (STC TYPE)			-5301
02	INT-	FE5 BLACK			
FD05-88-181	1	OPT-PKG, TOURING, (STD TYPE)			-5301
02	INT-	FE5 BLACK			
18	INT-	FE7 RED			
34	INT-	FE6 TAN			
FD01-88-181A	1	BASE, (STA TYPE)			5301-
02	INT-	FE5 BLACK			
FD03-88-181A	1	R2, R3, (STC TYPE)			5301-
02	INT-	FE5 BLACK			
FD05-88-181A	1	OPT-PKG, TOURING, (STD TYPE)			5301-
02	INT-	FE5 BLACK			
18	INT-	FE7 RED			
34	INT-	FE6 TAN			
+----------+ | 88-330B | +----------+		BACK(C),FRT SEAT			
FD03-88-6D0A	2	R2, R3, (STC TYPE)			-4B01
02	INT-	FE5 BLACK			
FD01-88-6D0A	2	BASE, (STA TYPE)			-5301
02	INT-	FE5 BLACK			
FD05-88-6D0	2	OPT-PKG, TOURING, (STD TYPE)			-5301
02	INT-	FE5 BLACK			
18	INT-	FE7 RED			
34	INT-	FE6 TAN			

4B01 FD333 -400022
5301 FD333 -400027

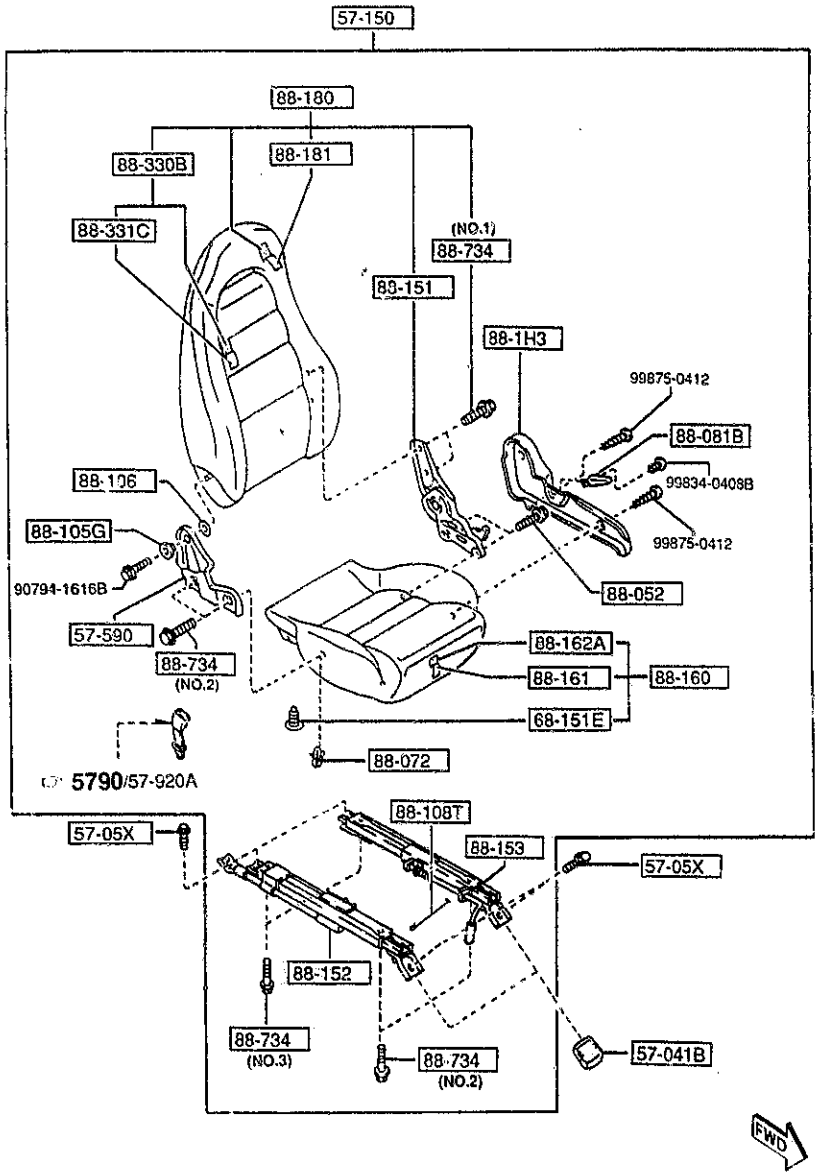

PART NO.	QTY	MODEL/RESTRICTION	MODEL/RESTRICTION	MODEL/RESTRICTION	FROM-TO
CONT'D					
FD03-88-6D0B	2	R2, R3, (STC TYPE)			4B01-5301
02	INT-	FE5 BLACK			
FD01-88-6D0B	2	BASE, (STA TYPE)			5301-
02	INT-	FE5 BLACK			
FD03-88-6D0C	2	R2, R3, (STC TYPE)			5301-
02	INT-	FE5 BLACK			
FD05-88-6D0A	2	OPT-PKG, TOURING, (STD TYPE)			5301-
02	INT-	FE5 BLACK			
18	INT-	FE7 RED			
34	INT-	FE6 TAN			
88-331C		TRIM(C),FRT BACK			
FD03-88-6D2A	2	R2, R3, (STC TYPE)			-4B01
02	INT-	FE5 BLACK			
FD01-88-6D2A	2	BASE, (STA TYPE)			-5301
02	INT-	FE5 BLACK			
FD05-88-6D2	2	OPT-PKG, TOURING, (STD TYPE)			-5301
02	INT-	FE5 BLACK			
18	INT-	FE7 RED			
34	INT-	FE6 TAN			
FD03-88-6D2B	2	R2, R3, (STC TYPE)			4B01-5301
02	INT-	FE5 BLACK			
FD01-88-6D2B	2	BASE, (STA TYPE)			5301-
02	INT-	FE5 BLACK			
FD03-88-6D2C	2	R2, R3, (STC TYPE)			5301-
02	INT-	FE5 BLACK			
FD05-88-6D2A	2	OPT-PKG, TOURING, (STD TYPE)			5301-
02	INT-	FE5 BLACK			
18	INT-	FE7 RED			

4B01 FD333 -400022
5301 FD333 -400027

5700 FRONT SEATS (2/3)

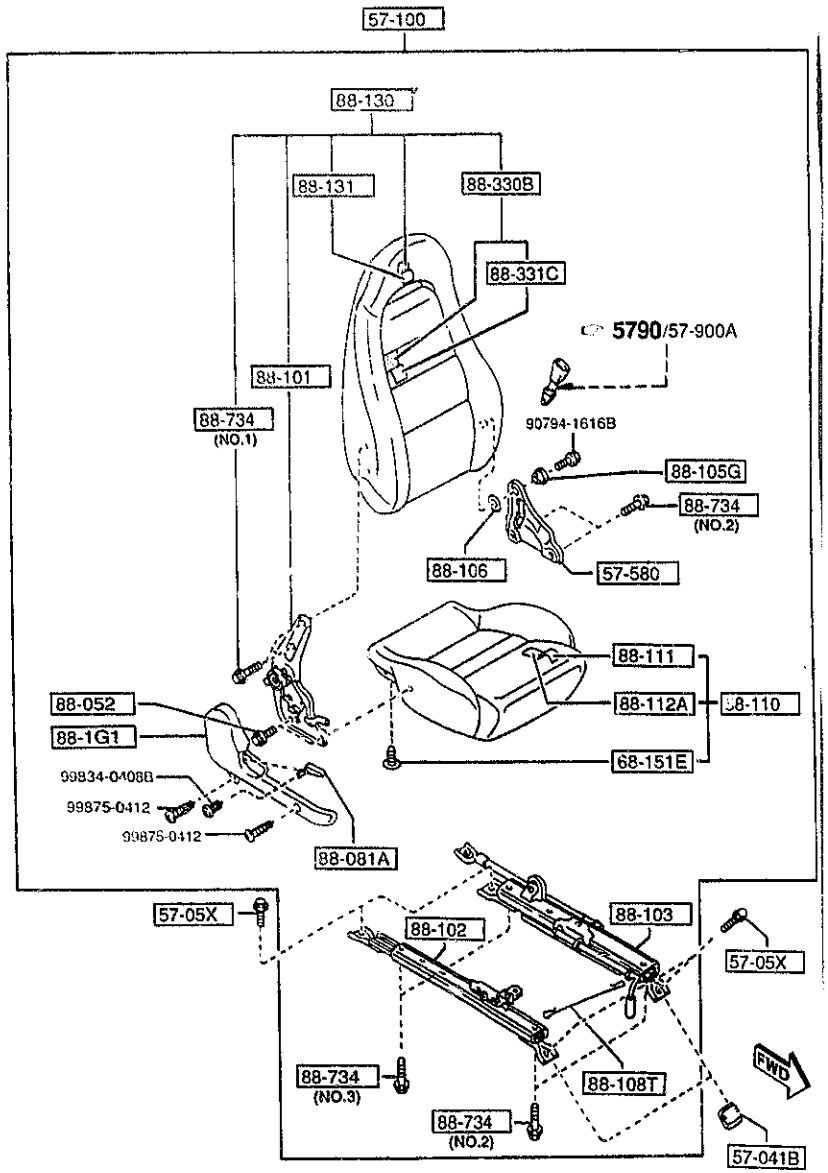

PART NO.	QTY	MODEL/RESTRICTION	MODEL/RESTRICTION	MODEL/RESTRICTION	FROM-TO
CONT'D					
34	INT-	FE6 TAN			
+----------+					
| 88-734 |		BOLT			
+----------+					
B456-88-815	4	(ILLUST. NO.1)			
B260-88-818	8	(ILLUST. NO.2)			
EA01-88-818	4	(ILLUST. NO.3)			

5790 SEAT BELTS

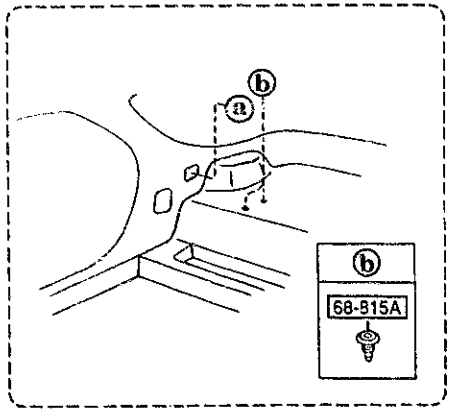

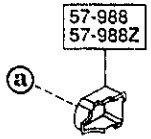

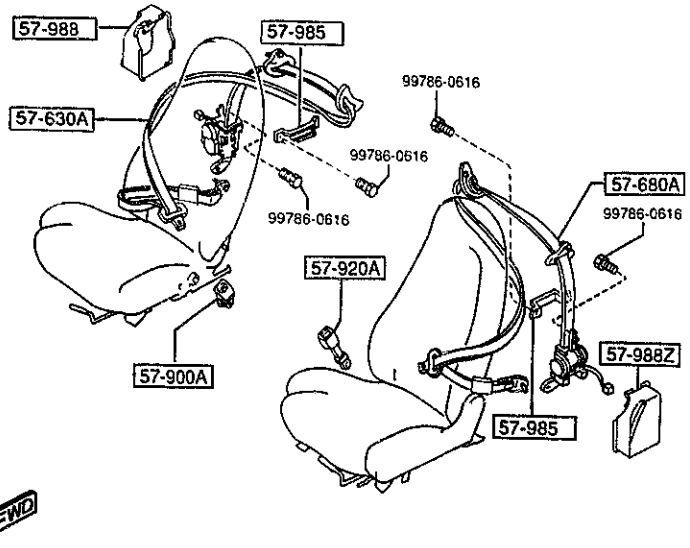

PART NO.	QTY	MODEL/RESTRICTION	MODEL/RESTRICTION	MODEL/RESTRICTION	FROM-TO
57-630A		BELT'B'(R),FRT SEAT			
FD15-57-630F	1				
00	INT-	FE5 FE6 FE7 BLACK			
57-680A		BELT'B'(L),FRT SEAT			
FD15-57-690F	1				
00	INT-	FE5 FE6 FE7 BLACK			
57-900A		BELT'A'(R),FRT SEAT			
FD01-57-620B	1				
02	INT-	FE5 FE6 FE7 BLACK			
57-920A		BELT'A'(L),FRT SEAT			
FD01-57-680D	1				
02	INT-	FE5 FE6 FE7 BLACK			
57-985		PLATE SET,SEAT BELT			
FD01-57-985A	2				
57-988		COVER(R),RETRACTOR			
FD01-57-988	1	(FOR FRONT)			
F100-57-988	1	(FOR REAR)			
57-988Z		COVER(L),RETRACTOR			
FD01-57-989	1	(FOR FRONT)			
F100-57-989	1	(FOR REAR)			
68-815A		TACKER			
1011-68-815	4				

5795 AIR BAG

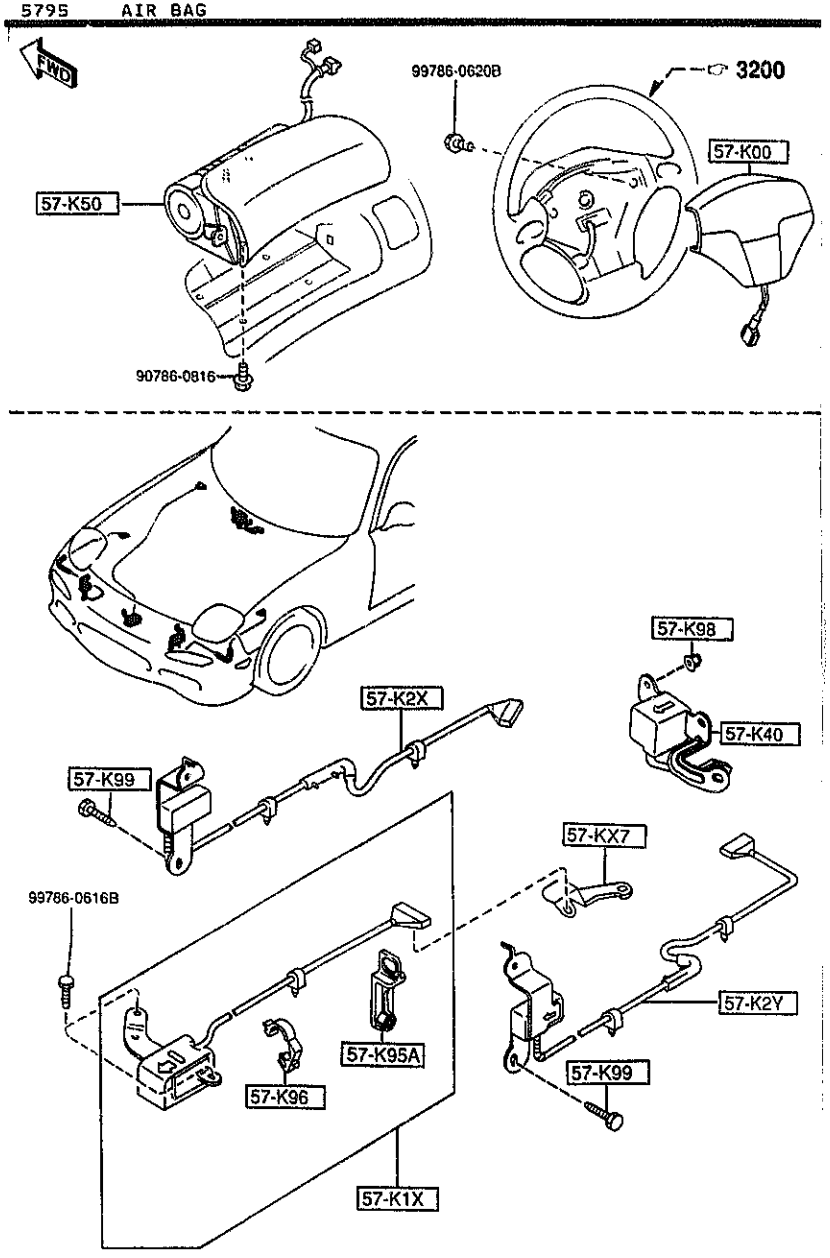

PART NO.	QTY	MODEL/RESTRICTION	MODEL/RESTRICTION	MODEL/RESTRICTION	FROM-TO
57-KX7 FD01-57-KX7	1	BRACKET,AIR BAG			
57-K00 FD15-57-K00A	1	MODULE,AIR BAG			
57-K1X FD01-57-K1XD	1	SENSOR,AIR BAG			
57-K2X FD15-57-K2X	1	SENSOR(R),AIR BAG			
57-K2Y FD01-57-K2YC	1	SENSOR(L),AIR BAG			
57-K40 FD01-57-K40A	1	SENSOR,AIR BAG-INNER			
57-K50 FD15-57-K7X	1	MODULE,AIR BAG PASSENGER			
57-K95A FD01-57-K95	1	CLIP,AIR BAG			
57-K96 FD01-57-K96	1	CLIP			
57-K98 FC66-57-K98	2	NUT			
57-K99 FC66-57-K99	4	SCREW,TAPPING			

5800 FRONT DOORS

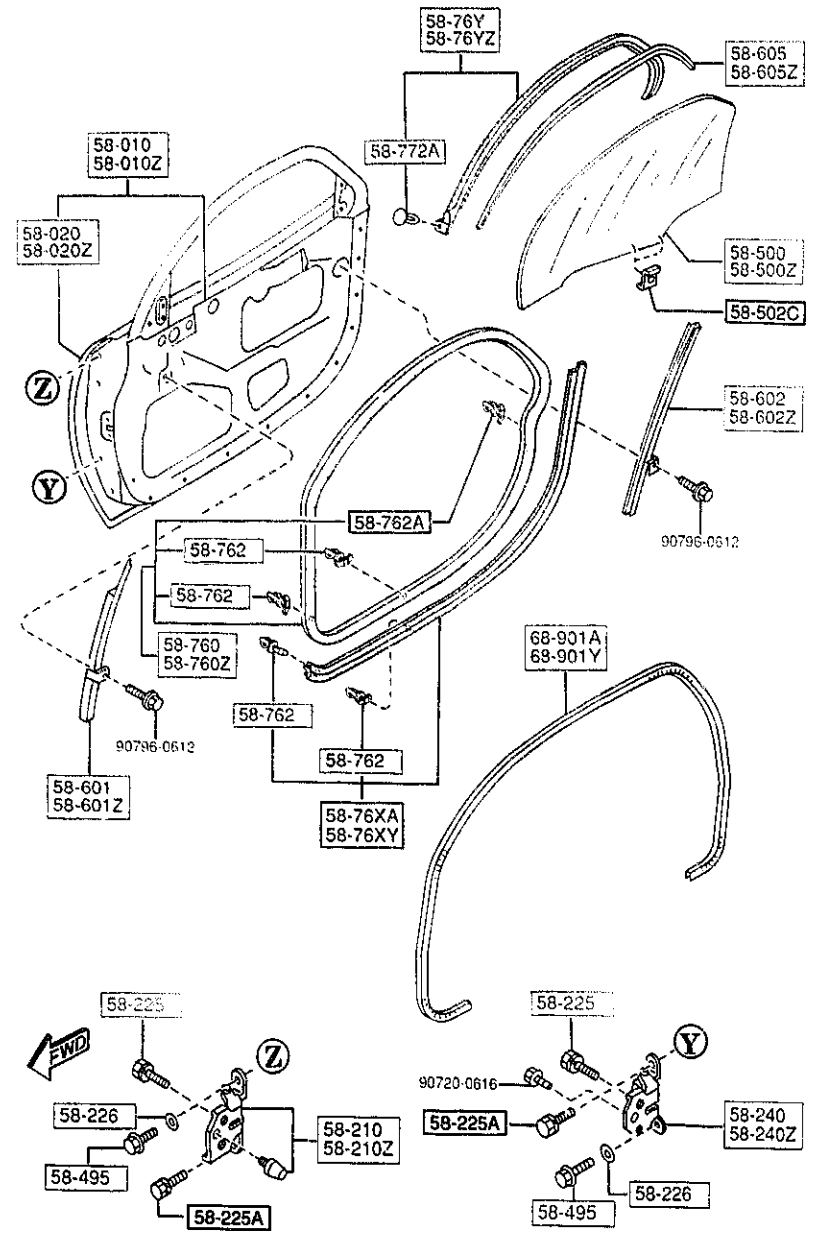

PART NO.	QTY	MODEL/RESTRICTION	MODEL/RESTRICTION	MODEL/RESTRICTION	FROM-TO
58-010		BODY(R),FRONT DOOR			
FD15-58-020C AN(FD15-58-020D)	1				-4B01
FD15-58-020D	1				4B01-
58-010Z		BODY(L),FRONT DOOR			
FD15-59-020C AN(FD15-59-020D)	1				-4B01
FD15-59-020D	1				4B01-
58-020		PANEL(R),OUT.-FRT DOOR			
FD01-58-030B	1				
58-020Z		PANEL(L),OUT.-FRT DOOR			
FD01-59-030B	1				
58-210		HINGE(R),DOOR-UPPER			
FD01-58-210A	1				
58-210Z		HINGE(L),DOOR-UPPER			
FD01-59-210A	1				
58-225		BOLT,SETTING-HINGE LOWER			
B455-58-225	8				
58-225A		BOLT,SETTING			
S085-58-225	4				
58-226		WASHER,SETTING			
GJ21-58-226	4				
58-240		HINGE(R),DOOR-LOWER			
FD01-58-240B	1				
58-240Z		HINGE(L),DOOR-LOWER			
FD01-59-240B	1				
58-495		BOLT,SET			
BA54-58-225	4				
58-500		GLASS(R),DOOR-FRT			

4B01 FD333 -400022

5800 FRONT DOORS

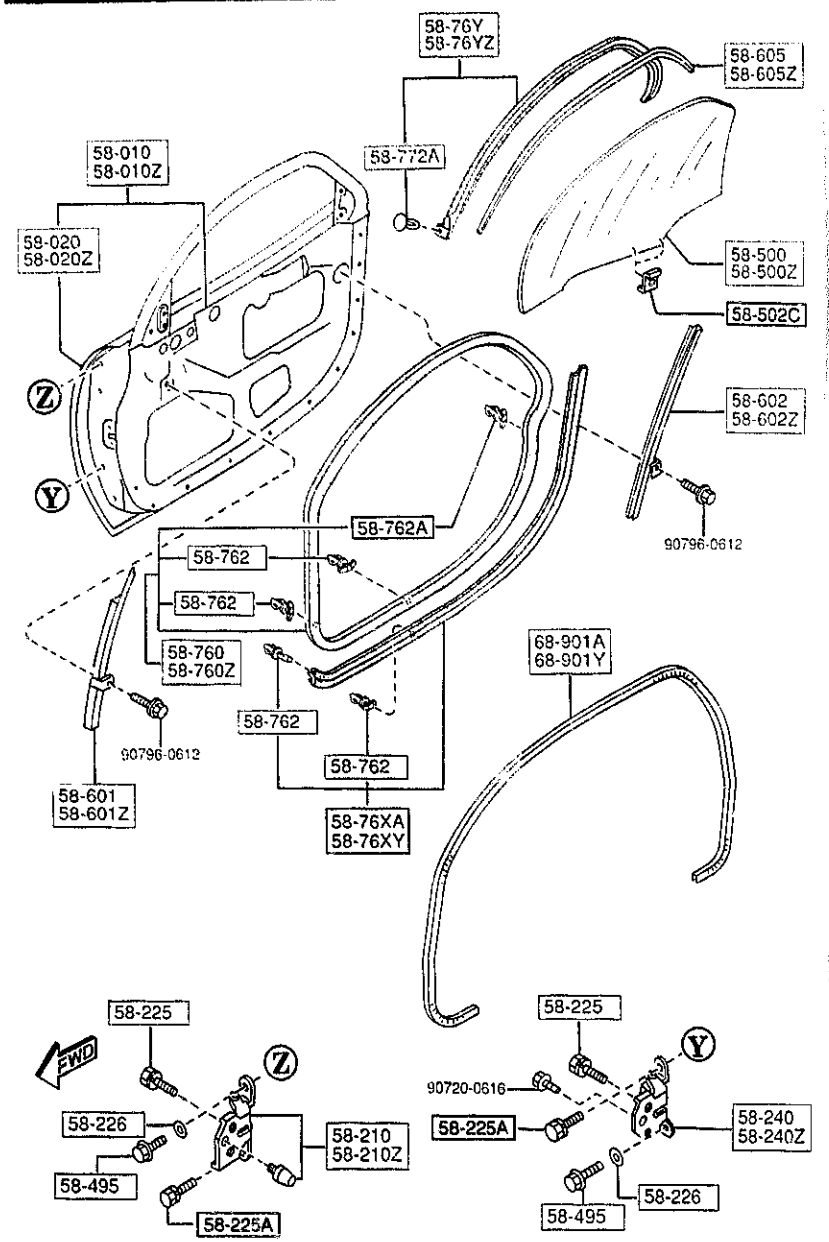

AUFA06

PART NO.	QTY	MODEL/RESTRICTION	MODEL/RESTRICTION	MODEL/RESTRICTION	FROM-TO
CONT'D					
FD15-58-511A	1				
58-500Z		GLASS(L),DOOR-FRT			
FD15-59-511A	1				
58-502C		GROMMET,SCREW			
S084-58-502	4				
58-601		GUIDE'A'(R),GLASS			
FD01-58-601B	1				
58-601Z		GUIDE'A'(L),GLASS			
FD01-59-601B	1				
58-602		GUIDE'B'(R),GLASS			
FD01-58-603A	1				
58-602Z		GUIDE'B'(L),GLASS			
FD01-59-603A	1				
58-605		CHANNEL(R),GLASS			
FD01-58-605E	1				
58-605Z		CHANNEL(L),GLASS			
FD01-59-605E	1				
58-76XA		WEATHERSTRIP(R),DOOR -LOW.			
FD01-58-76XA	1				
58-76XY		WEATHERSTRIP(L),DOOR -LOW.			
FD01-59-76XA	1				
58-76Y		WTHSTP(R),GLASS-F. D OOR			
FD01-58-76YF	1				
58-76YZ		WTHSTP(L),GLASS-F.DO OR			
FD01-59-76YF	1				
58-760		WEATHERSTRIP(R),DOOR			
FD01-58-760D	1				

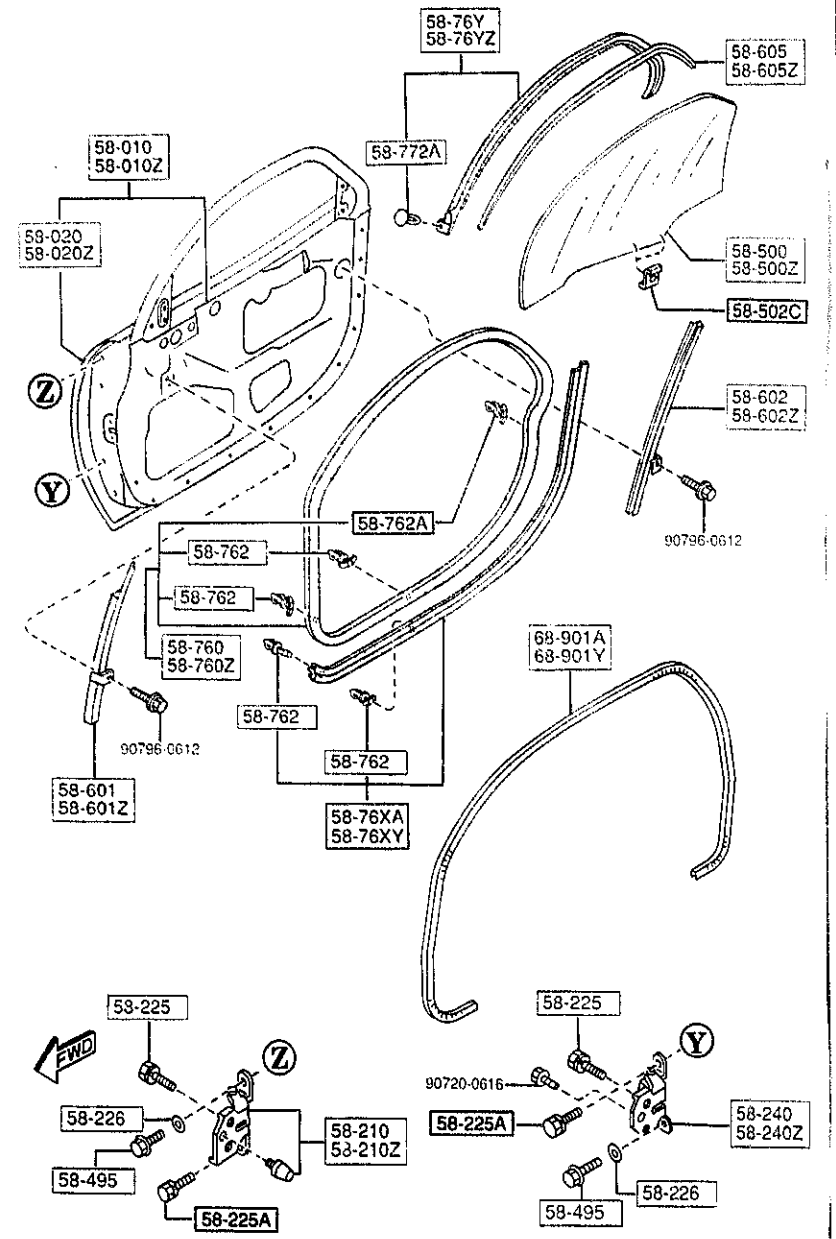

PART NO.	QTY	MODEL/RESTRICTION	MODEL/RESTRICTION	MODEL/RESTRICTION	FROM-TO
58-760Z		WEATHERSTRIP(L),DOOR			
FD01-59-760D	1				
58-762		FASTENER			
BC1D-58-762	52				
58-762A		FASTENER			
FD01-58-762	4				
58-772A		FASTENER			
1011-58-772	2				
68-901A		WELT(R),SEAMING			
FD01-68-911A	1				
02	INT-	FE5 FE6 FE7 BLACK			
68-901Y		WELT(L),SEAMING			
FD01-68-912A	1				
02	INT-	FE5 FE6 FE7 BLACK			

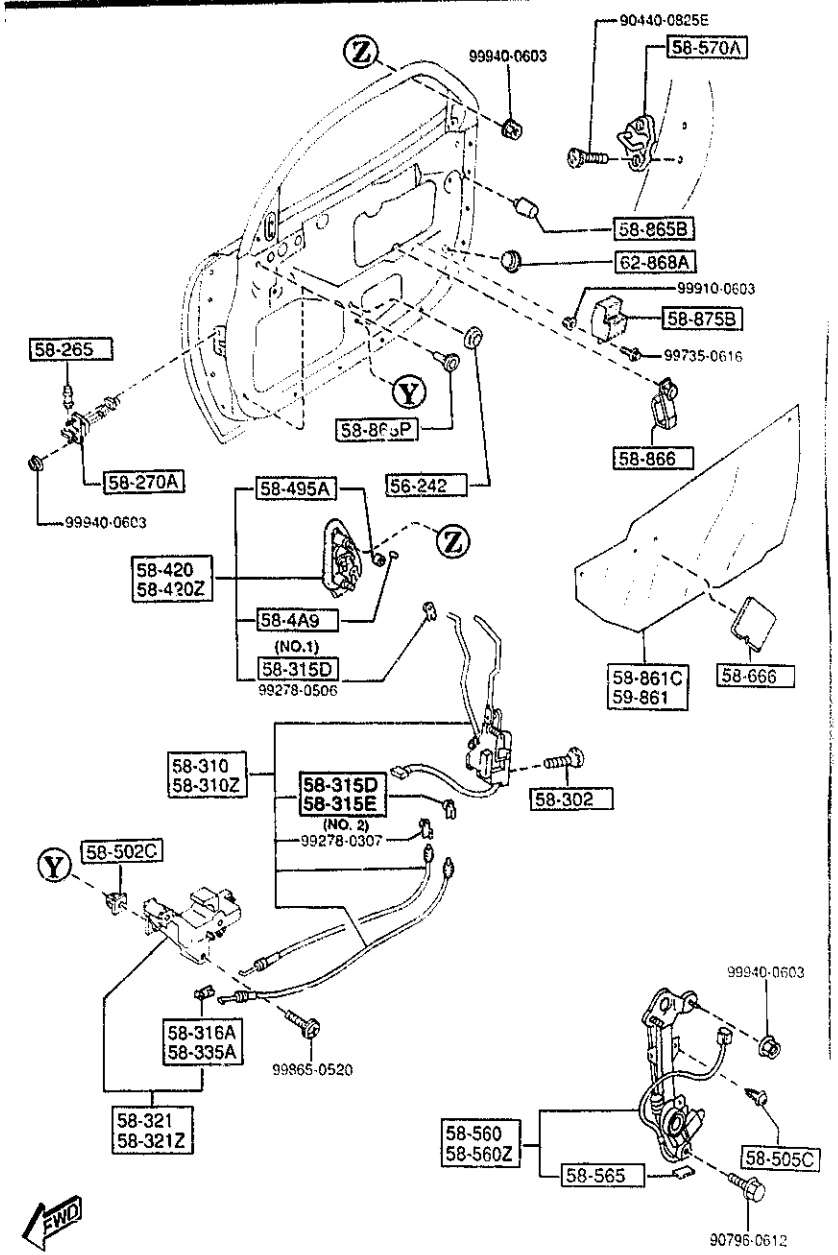

AUFA06

PART NO.	QTY	MODEL/RESTRICTION	MODEL/RESTRICTION	MODEL/RESTRICTION	FROM-TO
56-242		PLUG,DRAIN			
0118-56-242B	2				
58-265		PIN,CHECKER			
BC1D-58-265	2				
58-270A		CHECKER,DOOR			
FD01-58-270B	2				
58-302		SCREW,TAPPING-DOOR L OCK			
GA5R-58-302A	6				
58-310		LOCK(R),DOOR			
FD15-58-310	1				
58-310Z		LOCK(L),DOOR			
FD15-59-310	1				
58-315D		CLIP (R)			
FD01-58-315	1	(ILLUST. NO.1)			
G030-59-315	1	(ILLUST. NO.2)			
58-315E		CLIP (L)			
G030-58-315	1				
58-316A		CLIP			
B001-59-335	2	(FOR RIGHT)●			
58-321		HANDLE(R),INNER			
FD01-58-330C	1				
00	INT-	FE5 FE6 FE7 BLACK			
58-321Z		HANDLE(L),INNER			
FD01-59-330C	1				
00	INT-	FE5 FE6 FE7 BLACK			
58-335A		CLIP			
FB01-58-335	2	(FOR LEFT)			
58-4A9		PLUG,OUTER HANDLE			

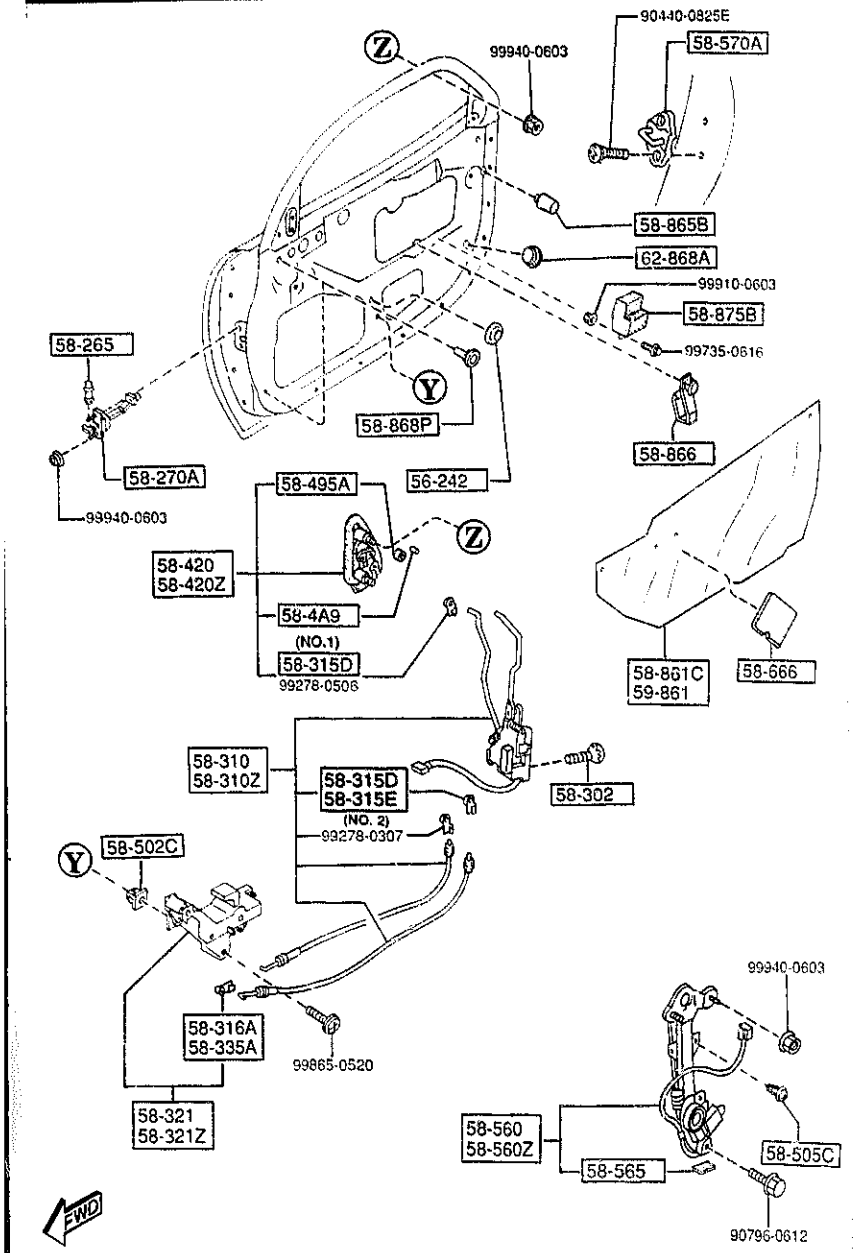

PART NO.	QTY	MODEL/RESTRICTION	MODEL/RESTRICTION	MODEL/RESTRICTION	FROM-TO
CONT'D					
HG30-58-4A9	1				
+---------+					
| 58-420 |		HANDLE(R),OUT.			
+---------+					
FD15-58-410C	1				-5106
A (FD15-58-410D)					
FD15-58-410D	1				5106-
+---------+					
| 58-420Z |		HANDLE(L),OUT.			
+---------+					
FD15-59-410C	1				-5201
A (FD15-59-410D)					
FD15-59-410D	1				5201-
+---------+					
| 58-495A |		RETAINER,LOCK CYL.			
+---------+					
J001-58-495	2				
+---------+					
| 58-502C |		GROMMET,SCREW			
+---------+					
FD01-58-332	10				
+---------+					
| 58-505C |		SCREW,WINDOW REGULAT OR			
+---------+					
B092-58-505	4				
+---------+					
| 58-560 |		REGULATOR(R),WINDOW			
+---------+					
FD15-58-560B	1				-5418
AN(FD15-58-560C)					
FD15-58-560C	1				5418-
+---------+					
| 58-560Z |		REGULATOR(L),WINDOW			
+---------+					
FD15-59-560B	1				-5417
AN(FD15-59-560C)					
FD15-59-560C	1				5417-
+---------+					
| 58-565 |		RUBBER,STOPPER			
+---------+					
GA7C-58-565	2				
+---------+					
| 58-570A |		STRIKER			
+---------+					
FD01-58-361	2				
+---------+					
| 58-666 |		SHEET			
+---------+					
B092-58-862	5				-4C01
B092-58-862	2				4C01-

4C01 FD333 -400022
5106 FD333 -400025
5201 FD333 -400026
5417 FD333 -400028
5418 FD333 -400030

5830 FRONT DOOR MECHANISMS

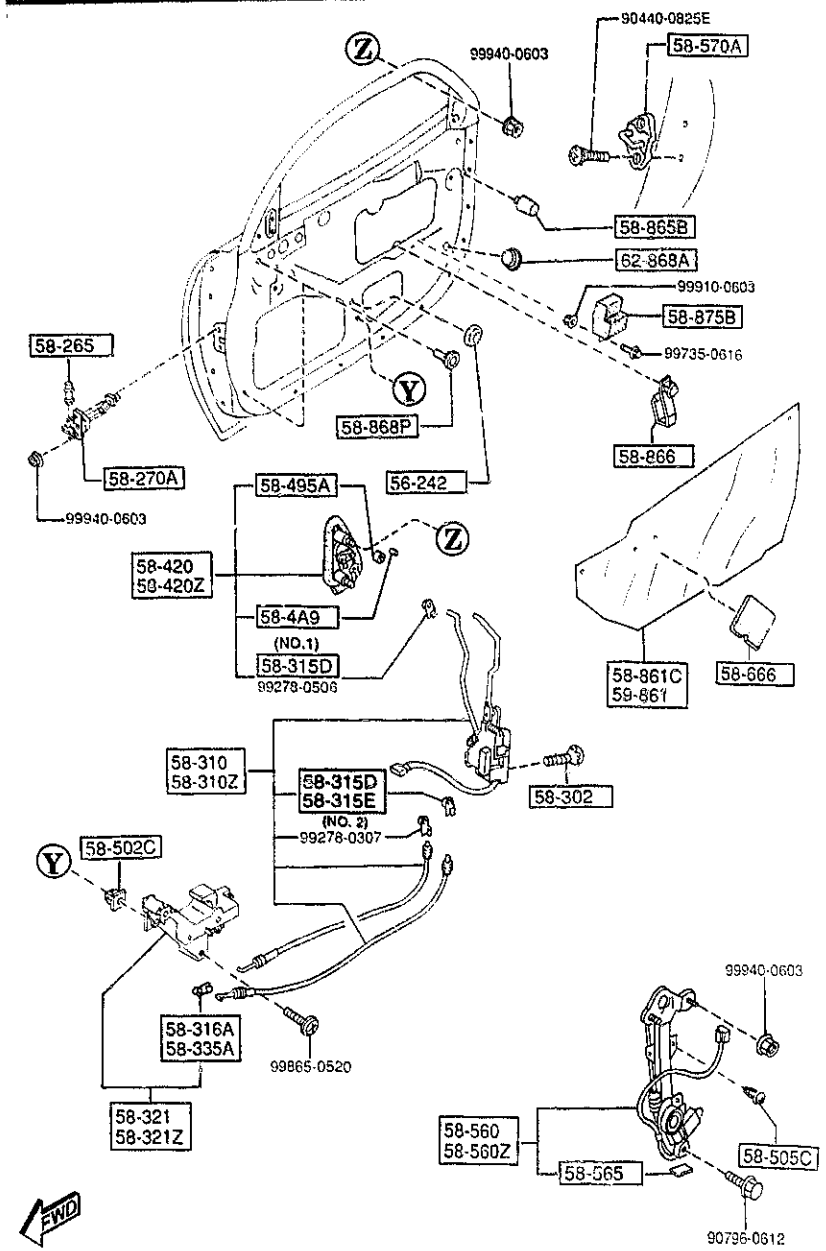

AUFA06

PART NO.	QTY	MODEL/RESTRICTION	MODEL/RESTRICTION	MODEL/RESTRICTION	FROM-TO
58-861C		SCREEN(R),FRONT DOOR			
FD15-58-861B	1				
58-865B		CUSHION,RUBBER			
G067-58-873	2				
58-866		CLIP			
B03B-58-866	4				
58-868P		COVER,HOLE-DOOR BODY			
FD01-58-868	4				-4C01
LA01-57-425A	4				4C01-
58-875B		PAD			
FD15-58-875E	2				
59-861		SCREEN(L),FRONT DOOR			
FD15-59-861B	1				
62-868A		COVER,HOLE-LIFT GATE			
B499-62-868	2				-4B01

4B01 FD333 -400022
4C01 FD333 -400022

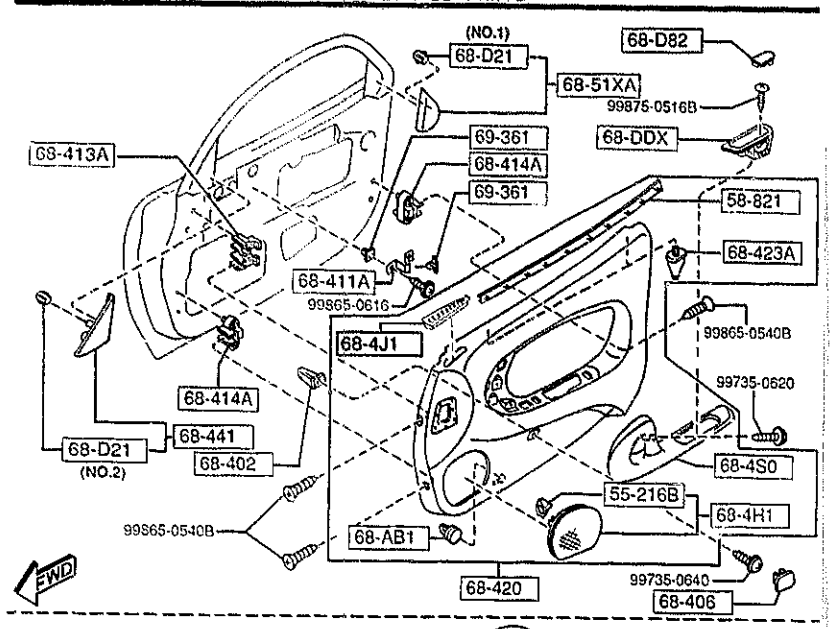

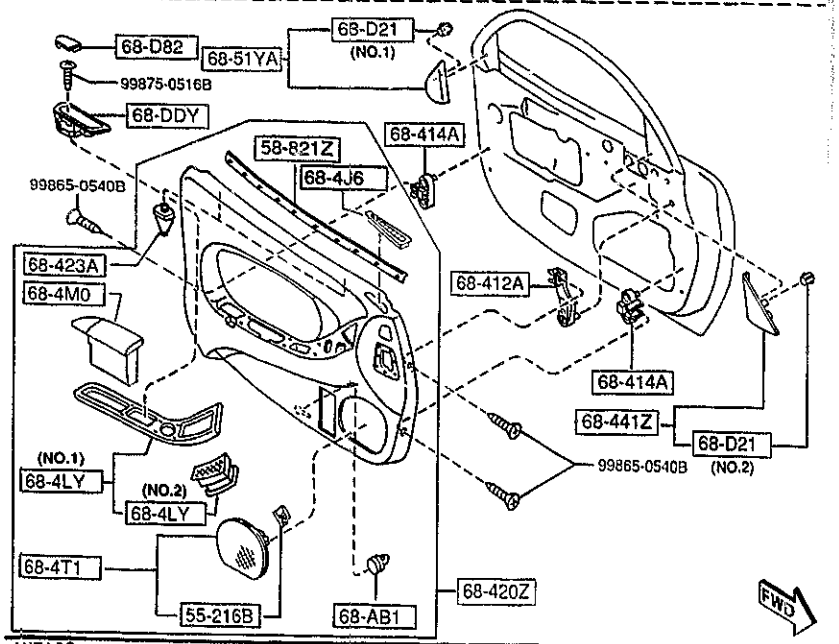

AUFA06

5840 -1 FRONT DOOR TRIMS & RELATED PARTS

PART NO.	QTY	MODEL/RESTRICTION	MODEL/RESTRICTION	MODEL/RESTRICTION	FROM-TO
55-216B		SPRING,CENTER PANEL			
B092-55-257	4				
58-821		WEATHERSTRIP(R),INN.			
FD01-58-821	1				
58-821Z		WEATHERSTRIP(L),INN.			
FD01-59-821	1				
68-AB1		FASTENER			
G350-68-AB1	6				
68-DDX		PANEL(R),RECESS			
FD01-68-DDXE	1				
00	INT-	FE5 FE6 FE7 BLACK			
68-DDY		PANEL(L),RECESS			
FD01-68-DDYE	1				
00	INT-	FE5 FE6 FE7 BLACK			
68-D21		CLIP,TRIM			
FD01-68-D21	4	(ILLUST. NO.1)			
LA10-68-D21	2	(ILLUST. NO.2)			
68-D82		CAP,ASSIST-DOOR TRIM			
FD01-68-D82A	2				
00	INT-	FE5 FE6 FE7 BLACK			
68-4H1		GRILLE(&),SPEAKER			
FD01-68-4H0B	1				
02	INT-	FE5 FE6 FE7 BLACK			
68-4J1		GRILLE(R),SIDE DEMIS TER			
FD01-68-4J1	1				
02	INT-	FE5 FE6 FE7 BLACK			
68-4J6		GRILLE(L),SIDE DEMIS TER			
FD01-68-4J6	1				
02	INT-	FE5 FE6 FE7 BLACK			

5840 FRONT DOOR TRIMS & RELATED PARTS

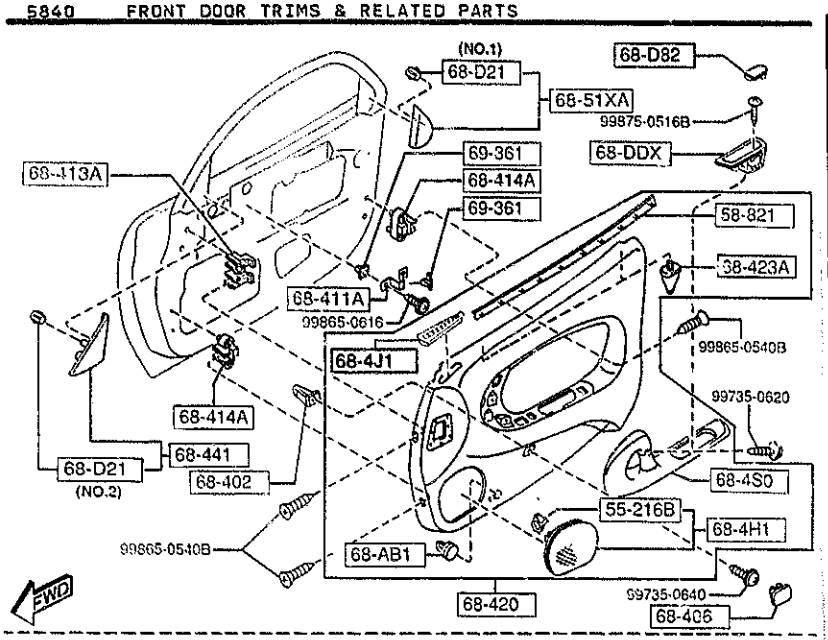

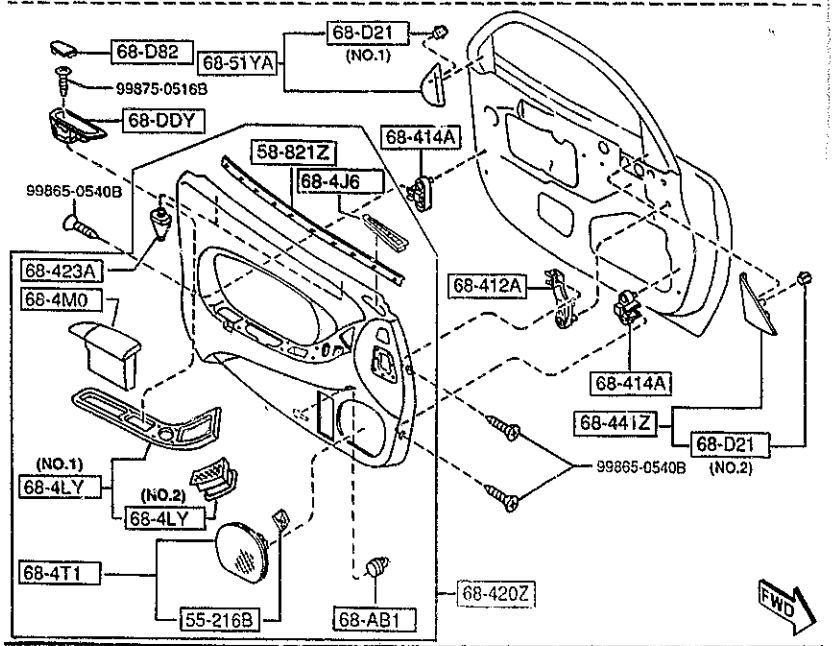

AUFA06

PART NO.	QTY	MODEL/RESTRICTION	MODEL/RESTRICTION	MODEL/RESTRICTION	FROM-TO
68-4LY		PANEL(L),SWITCH			
FD15-68-4LY	1	(ILLUST. NO.1)			
00	INT-	FE5 FE6 FE7 BLACK			
FD15-68-4L6	1	(ILLUST. NO.2)			
00	INT-	FE5 FE6 FE7 BLACK			
68-4M0		LID(L),ARM REST-TRIM			
FD15-68-4M0B	1				
00	INT-	FE5 FE6 FE7 BLACK			
68-4S0		GRIP,FRT ASSIST			
FD15-69-44X	1				
00	INT-	FE5 FE6 FE7 BLACK			
68-4T1		GRILLE(L),SPEAKER			
FD01-68-4W0B	1				
02	INT-	FE5 FE6 FE7 BLACK			
68-402		GROMMET,SCREW			
H380-68-402	2				
68-406		CAP,DOOR TRIM			
FD01-68-406	1				
02	INT-	FE5 FE6 FE7 BLACK			
68-411A		BRACKET,TRIM			
FD01-68-411	1				
68-412A		BRACKET,TRIM			
FD01-68-412A	1				
68-413A		BRACKET,TRIM			
FD01-68-413B	1				
68-414A		BRACKET,TRIM			
FD01-68-414A	4				
68-420		TRIM(R),DOOR			
FD15-68-420J	1				

5840 FRONT DOOR TRIMS & RELATED PARTS

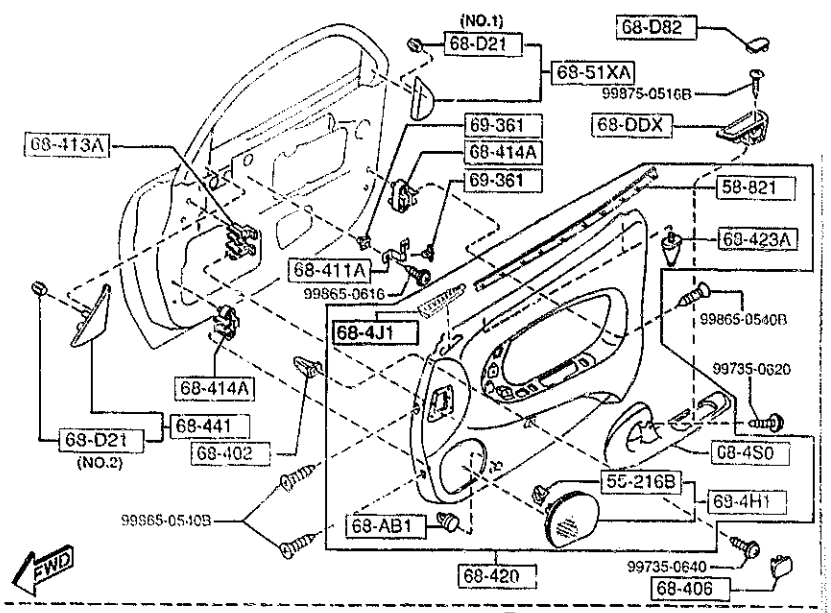

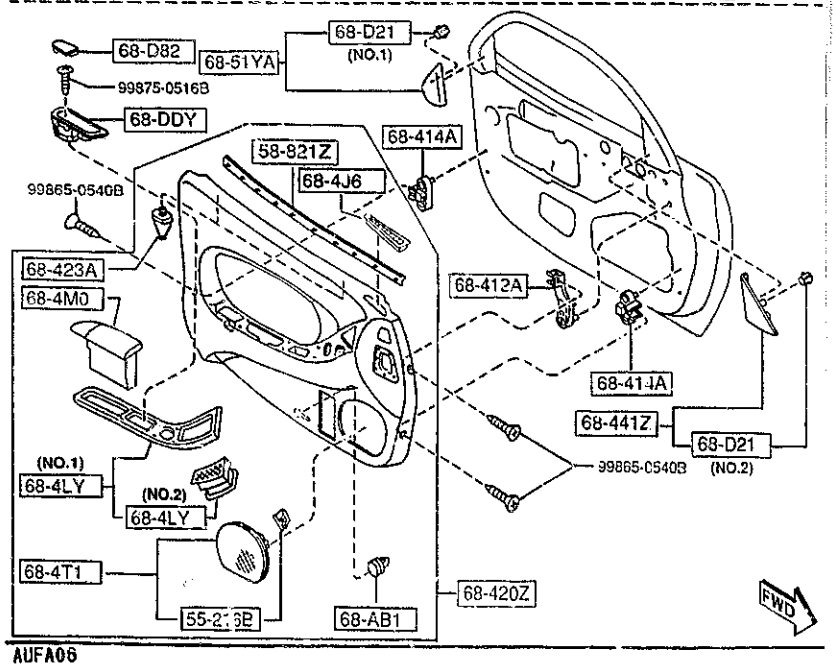

AUFA06

5840 -3 * FRONT DOOR TRIMS & RELATED PARTS

PART NO.	QTY	MODEL/RESTRICTION	MODEL/RESTRICTION	MODEL/RESTRICTION	FROM-TO
CONT'D					
02 INT-		FE5 FE6 FE7 BLACK			
68-420Z		TRIM(L),DOOR			
FD15-68-450J	1				
02 INT-		FE5 FE6 FE7 BLACK			
68-423A		PIN,LOCATOR			
FD01-68-423A	4				
68-441		GARNISH(R),DOOR			
FD01-68-DJXC	1				
68-441Z		GARNISH(L),DOOR			
FD01-68-DJYC	1				
68-51XA		GARNISH(R),SAIL-INN.			
FD01-68-51XD	1				
68-51YA		GARNISH(L),SAIL-INN.			
FD01-68-51YD	1				
69-361		GROMMET,SCREW			
B316-69-361	3				